Applicants must appear in person to file an application. Applications by mail or courier will not be accepted.

APPLICATION FOR A SPECIAL ADMINISTRATIVE PERMIT (SAP)

For SPI, Beltline Overlay, LW, MR, MRC, and NC Zoning Districts

City of Atlanta, Office of Planning (404/330-6145)

File No.:_____

DATE STAMP RECEIVED BY OFFICE OF PLANNING

APPLICANT (name) _____

COMPANY _____

ADDRESS _____

PHONE NO. _____ EMAIL _____

PROPERTY LANDOWNER _____

ADDRESS _____

PHONE NO. _____ EMAIL _____

ADDRESS OF PROPERTY _____

Land District _____ Land Lot _____ Council District _____ NPU _____

Is property within the BeltLine Overlay District? Yes ☐ No ☐ Zoning Classification _____

INSTRUCTIONS (approved SAP plans shall be included in Building Permit Application submittal to the Office of Buildings):

- Demolition Permits: Applications for demolition permits shall not be approved until the SAP is approved.
- Signage: SAP approval for free-standing/monument and/or projecting structures only. Signage approval issued by Office of Buildings.
- Photographs (buildings/site): For alterations to existing building facades and/or site modifications to document existing conditions.
- **Submittal Package Requirements (See detailed checklist):**
  1) **Project Summary:** Provide cover letter describing new construction, alterations, repairs or other changes to the exterior of existing structures or to the site. Requests for administrative variations must be accompanied by a written justification for each.
  2) **Property Survey:** Submit two (2) copies. Lot consolidation, replatting or subdivision may be required prior to approval of SAP.
  3) **Site Plan** (released for construction and sealed) **and Building Elevations:**
     a. **Initial Plan Submission**: **Two (2)** copies for initial review (**four (4)** copies that require DRI & NPU review). Also, copies of applicable Rezoning Legislation, Special Use Permit, Variance or Special Exception letters from Board of Zoning Adjustment.
     b. **Final Plan Submission** (after staff review) incorporating staff comments: **11** copies of site plan and **5** copies of elevations.
     c. Other information: Additional plans or documents may be required at the discretion of the Office of Planning.
  4) **Property Owner Authorization:** Submit required notarized owner consent per attached form.
  5) **Notice to Applicant:** Submit attached form with signature and date.
- **Additional Submittal Requirements (as applicable):**
  1) **BeltLine, NC-2, NC-6, NC-10, NC-11, NC-12, and NC-14 Districts:** Pre-application conference with Planning Staff is required prior to SAP submittal. **INCLUDE EXTRA COPY OF SUBMITTAL PACKAGE** for the required 21-day NPU review period as detailed below:
     a. Mail a copy of the SAP application and plans which are stamped received by the Office of Planning to the NPU.
     b. Submit a copy of U.S. Postal Service Certificate of Mailing within 5 business days of SAP application submittal.
     c. Submit notarized Affidavit of NPU Notification within 5 business days of SAP application submittal.
  2) **Development Review Committee (DRC):** Projects within SPIs 1, 9, 12, 15, 16, 17 districts may require review by DRC.
  3) **Development of Regional Impact (DRI) Study:** Developments either; over 300,000 sf; or greater than 400 residential units; or a mixed-use development with more than 222 residential units require a DRI approval by GRTA and ARC.
     a. Initial submission: DRI Form 1 with the SAP application. Planning staff will then submit information to GRTA and ARC.
     b. Final submission: Copy of the DRI Notice of Decision letter shall be printed on the final site plan submission.
- **Watershed Management (DWM) Requirements (Section 74-504(a)):** consultation meeting with DWM is REQUIRED to determine applicable stormwater improvements. Call 404-330-6249 or visit www.atlantawatershed.org/greeninfrastructure
- **Fees (non-refundable):** Payable to the "City of Atlanta" in the form of cash, credit card, personal or cashier check, or money order.
  - Exterior demo, outdoor dining new/expansion, or non-expansion: $250.
  - Developments 50,000 to 250,000 sqft of floor area: $1,000.
  - Developments **<** 50,000 sqft of floor area: $500.
  - Developments **≥** 250,000 sqft of floor area: $1,500.

I HEREBY AUTHORIZE CITY STAFF TO INSPECT PREMISES OF ABOVE DESCRIBED PROPERTY. I HEREBY DEPOSE THAT ALL STATEMENTS HEREIN ATTACHED & SUBMITTED ARE TRUE TO THE BEST OF MY KNOWLEDGE AND BELIEF.

Date _____ **Signature of Applicant** _____

The City Code provides that Planning Director shall review each request for an SAP within 30 days of a filing of a **completed*** application. (Atlanta Code Chapter 16, Section 16-25). *** Note: NPU/DRC notification and review, as applicable, are required to complete the SAP application.**

(FOR OFFICE OF PLANNING OFFICE USE ONLY)

The above request for a Special Administrative Permit (SAP) was ☐ **approved** or ☐ **denied** on _____

See attached **Special Administrative Permit Approval Form(s)** for detailed approval information.

_____ _____

Signed for Director, Office of Planning Staff Reviewer - Print Name

City of Atlanta Office of Planning

SPECIAL ADMINISTRATIVE PERMIT (SAP) APPLICATION

Submittal Checklist

The following checklist is designed to assist petitioners in preparing required materials for SPI, Beltline Overlay, NC, LW, MRC, and MR districts. **Items omitted will delay applicant's review process.** The following items are required as part of a complete application for a Special Administrative Permit. **NPU Notification and DRC review, as applicable, are required as a part of a completed SAP application.** Please note: *** FINAL APPROVED SAP PLANS ARE REQUIRED WITH THE PERMIT APPLICATION SUBMITTAL TO THE OFFICE OF BUILDINGS.**

___1. **SAP Application Form and Property Landowner Authorization Form:** completed with notarized signatures.

___2. **Notice to Applicant Form:** with signature and date.

___3. **Project Summary:** Provide cover letter clearly describing all new construction, alterations, repairs or other changes to the exterior appearance of existing structures or site. **Any administrative variations ARE REQUIRED to be accompanied by a written justification for each variation requested.**

___4. **Property Survey:** Two (2) copies of survey (for new single-family and duplex construction, show existing footprints of principal structures on adjoining lots fronting the same street).

___5. **Site Plan** (drawn to scale, released and sealed for construction) of proposed improvements showing items listed below*****. **Initial Submission**: two copies (three if DRI approval required) for staff review. Final Submission (after staff review): 11 copies.

a) Date, north arrow, and graphic scale.
b) Adjacent streets, with street names, property lines and dimensions, and easements.
c) Existing conditions to remain: identify all overhead utility poles, transformers, above ground stormwater detention areas and inlets.
d) Proposed new installations: Identify the number, type and location of new street lights, transformers, AC units and other similar mechanical/accessory equipment at or above grade. Identify such items in the public right-of-way which final approval by Department of Public Works or GDOT is required.
e) Specify location and widths for all Sidewalks (street furniture and clear zones) and Supplemental Zones.
f) Ground floor layout plan with building and tenant entrances also shown
g) Street-front ground floor façade fenestration – vertical/horizontal window dimensions and % of façade length
h) Outdoor dining – seating plan, dimensions, and % of business establishment floor area
i) Height of structures (including fences/walls)
j) Parking, driveway and curb cut layout and dimensions (auto, truck loading, & bicycle/moped)
k) Location of parking deck light fixtures. Also indicate amount of foot-candles, and type of light fixture
l) **Landscape plan**: Planting locations including street trees (with tree species and calipers indicated), parking lot and other on-site landscaped areas (with the dimensions and percentage of lot calculated).
m) **Site Plan Specifications Table*** (show specifications in table form on site plan):
- Zoning Classification, Net Lot Area & Gross Land Area, Floor Area Ratio (FAR), square footage of structures & individual uses
- Number of minimum and maximum required parking spaces (auto & bicycle/moped), & loading spaces**
- For commercial** uses:
  - Maximum building coverage
  - Public space area (PSR)
- For residential** uses:
  - Number of total dwelling units and bedroom count per unit.
  - Total open space (TOSR) as applicable
  - Total useable space (UOSR) – amount specified for balconies, rooftop terraces, plazas/parks, etc.

** As applicable per scope of work on project*
*** Show required and proposed (where applicable measure in square footage)*

___6. **Rooftop plan** when counted towards open space requirements.

___7. **Elevation drawings of all building facades** (5 copies)

___8. **Section drawing(s)** as needed showing required sidewalks, supplemental zones (with retaining walls), and building façade & finished floor-level dimensioned within 5 feet above the adjacent sidewalk-level

___9. **DRI conditions of approval, rezoning legislation, variance or special exception letters** printed on site plan.

___10. **Beltline Overly District, NC-2, NC-6, NC-10, NC-11, and NC-12** properties:
- Notarized **Affidavit of NPU Notification,** and Copy of **U.S. Postal Service Certificate of Mailing**.

___11. **Zoning Conditions/Approvals**: provide copies of applicable Rezoning Legislation, Special Use Permit, Variance or Special Exception letters from Board of Zoning Adjustment.

___12. **Other information** necessary for the SAP as requested by staff.

___13. **Watershed Management (DWM) Requirements (Section 74-504(a)):** consultation meeting with DWM is REQUIRED to determine applicable stormwater improvements. Call 404-330-6249 or visit www.atlantawatershed.org/greeninfrastructure

Special Administrative Permit (SAP) - Development Review Process

1. Pre-application meeting with Office of Planning (OOP)
2. SAP Application Submittal
3. BeltLine District - NPU Review
4. Development Review Committee (DRC): SPI Districts 1, 9, 15, 16, & 17
5. Development of Regional Impact (DRI) - if applicable
6. Preliminary OOP Staff Review
7. Updated plans submitted for Final Review/Approval (repeat as necessary to meet requirements)
8. DRI Notice of Decision
9. Office of Planning SAP Approval
10. Office of Buildings Plan Review Coordinator
    - Fulton Co. Health Dept.
    - Fire Marshall
    - City Arborist
    - Site Development/Watershed
    - Traffic and Transportation
    - Permit Fees and Impact Fee Assessment
11. Office of Buildings Plan Approval & Receipt of Building Permit

SPI, BeltLine & "QOL" (LW, NC, MR, MRC) Districts

City of Atlanta Office of Planning

DEVELOPMENT REVIEW COMMITTEES (DRC)

In Special Public Interest (SPI) Districts

Development Review Committees (DRC) have been established as an advisory group for the purpose of providing to the Director of the Office of Planning formal comments on Special Administrative Permit (SAP) applications within a particular SPI zoning district. Applicants are required to make a presentation of their project to the applicable DRC committee. DRC review is required as part of a completed SAP application.

Each DRC shall consist of committee members representing the corresponding SPI district stakeholders, including: property owner(s), business owner(s) or resident(s), and applicable neighborhood organization(s).

The DRC convenes monthly (or as needed) to comment on SAP applications within a particular District. Each DRC shall provide recommendations to the Office of Planning Staff and the applicant within 7 business days, unless applicant is requested to return to the applicable DRC, and or present to respective neighborhood organization(s), or NPU.

DRC Committees (established by City Council Resolution)

- SPI-1 Downtown (2007)
- SPI-9 Buckhead Village (2010)
- SPI-12 Buckhead/Lenox Stations (2012)
- SPI-16 Midtown District (2001)
- SPI-17 Piedmont Avenue (2001)
- SPI-15 Lindbergh (2001)

Meeting Dates and Locations

Downtown SPI-1
Meetings held the 4th Thursday of each month
Central Atlanta Progress, 50 Hurt Plaza, Suite 110
Contact: Jennifer Ball at jball@atlantadowntown.com
(404) 522-3344

Midtown SPI-16 and Piedmont Avenue SPI-17
Meetings held the 2nd Tuesday of each month
Midtown Alliance, 999 Peachtree Street, Suite 730
Contact: Ginny Kennedy at ginny@midtownalliance.org
(404) 892-4782

Buckhead Village SPI-9 and Buckhead/Lenox SPI-12
Meeting held 1st Wednesday of each month
BATMA, 3340 Peachtree Road
Tower Place Building 100, Suite 1515
Contact: Denise Starling at denise@batma.org
(404) 842-2680

Lindbergh SPI-15
Meeting dates coordinated as necessary
MARTA Headquarters, 2424 Piedmont Road
Contact: City of Atlanta Planning Staff
(404) 330-6145

Application Submittal and Review Process

1) Pre-application meeting with Office of Planning staff.
2) Notify the applicable DRC contact (as listed above) to arrange placement on the next scheduled DRC meeting agenda.

DRC Submittal Requirements

1) Written summary of proposed scope of work (include applicable project information such as total square footage, # and breakout of residential units, and square footage break out of each commercial use, building height, parking and loading provided, etc.).
2) Identification of all administrative variations requested, and written justification for each requested.
3) PDF Digital drawings (to-scale) of site plans and building elevations as applicable to the scope of work.
4) Photographs of the existing property.
5) Contact DRC representative to e-mail project information (prior to meeting) and confirm DRC meeting date and time.
6) At DRC meeting:
    a. Provide hardcopies of cover letter and drawings (in 11”x17” size) for distribution to each committee member.
    b. Provide drawings on boards for project presentation to committee members or digital powerpoint presentation (coordinate with DRC representative on the latter).

Committee Review Responsibilities

1) Make recommendations on project concerning zoning requirements and administrative variations requested.
2) Make other design recommendations for consideration concerning an application. Note: these other recommendations are not code requirements.

REVISED 5/23/12

City of Atlanta Office of Planning

SPECIAL ADMINISTRATIVE PERMIT (SAP)

Affidavit of NPU Notification for Beltline, NC-2, NC-6, NC-10, NC-11, NC-12 & NC-14 Districts

File # _____

This Affidavit form and a copy of the **United States Postal Service Certificate of Mailing** are required by owner and applicant of the property subject to the Special Administrative Permit application. Submit within FIVE (5) days of application submittal.

Neighborhood Planning Unit (NPU) has TWENTY ONE (21) days from the date of the associated certificate of mailing to provide one (1) set of written comments to the Office of Planning prior to any SAP approval.

LOCATION OF SUBJECT PROPERTY:

Street Address(es):_____

Zoning Classifications _____ Land District ____ Land Lot _____ Council District ___ NPU ___

APPLICANT:

Name: _____

Company: _____

Address: _____

Telephone: _____ Email: _____

As the APPLICANT, I, _____swear and affirm that I have notified the NPU(s) to which this Special Administrative Permit (SAP) affects, and am aware of the applicable requirements of the City of Atlanta Zoning Ordinance Sections 16-36.004, 16-32J.002(1), 16-32K.002(1), and 16-32L.002(1).

NPU Contact Information

_____	_____	_____
Name of Contact Person(s)	Phone Number(s)	Email Address(es)

Adjacent NPU(s) Contact Information

_____	_____	_____
Name of Contact Person(s)	Phone Number(s)	Email Address(es)

(To be completed by Notary):

Personally Appeared Before Me this _____ day of

_____, 20_____.

Who Swears That the Information Contained
In this Authorization Is True and Correct
To the Best of His or Her Knowledge and Belief.

_____
Signature of Notary Public

_____
Date

(To be completed by Applicant & Staff):

_____
Signature of Applicant

_____
Printed Name of Applicant

_____
Office of Planning Staff

Signature of Staff only represents that the required notification to the NPU has been completed and does not indicate any position of the Office of Planning on the application.

City of Atlanta Office of Planning

BELTLINE SPECIAL ADMINISTRATIVE PERMIT (SAP)

NPU Notification Form

BL- _____

NPU Chairperson or Designee:

Enclosed is a copy of a Special Administrative Permit (SAP) application for a property located within the BeltLine Overlay Zoning District. As part of the SAP application, applicants are required to submit site plans and building elevations, as applicable to the scope of work, to the Office of Planning for approval prior to obtaining a building permit. Per **Section 16-36.004** of the Beltline district regulations SAP approval is required for:

> "All exterior demolition, new construction (including additions to existing buildings), expansions of outdoor dining or any construction which results in increased lot coverage, modification of the building footprint, or modification of building facades that alters the configuration of openings. "

In addition to the SAP submittal as specified above, per **Section 16-36.004** the applicant is also required to send a full copy of the SAP application to the respective NPU chair or their designee, evidenced with a certificate of mailing, so that the NPU has an opportunity to review and provide written comments to the Office of Planning regarding an application prior to any SAP approval. Please note, where underlying regulations require Variance, Special Exception or Special Use Permit action, the SAP shall not be issued until the necessary approval has been obtained.

The time period for NPU comment is 21 days from the date of the postage receipt. If the NPU has no comments, or feels they are unnecessary, the Office of Planning should receive such written notification as soon as possible within the 21-day period. Comments received after the designated review period cannot be considered in the Office's project review or approval.

The BeltLine Zoning Overlay District primarily has design requirements that prescribe parameters for site layout and building elevations. The district regulations do not address issues related to land use or density (building square footage or number of units) as these are addressed by the underlying zoning district regulations. Therefore, NPU review should primarily focus on the following items as addressed in the Beltline Zoning District including:

- Building placement
- Building setbacks adjacent to streets (pertaining to minimum sidewalks and supplemental zones widths), and transitional yards
- Provision of sidewalks and street trees
- Provision of parking, loading and bicycle spaces
- Location of parking and driveways
- Parking lot landscaping
- Parking deck façade elevations
- Building façade elevations related to entrances and windows
- …and other BeltLine regulations

For questions, ask for a BeltLine staff member at 404/330-6145.

Please send your written comments and or questions referencing the SAP case number and address to:

BeltlineBOP@atlantaga.gov

Applicant shall submit this form letter as the cover page to the package mailed to NPU chair or designee.

City of Atlanta Office of Planning

SPECIAL ADMINISTRATIVE PERMIT (SAP) APPLICATION

Notarized authorization by Property Landowner

File #_____

(Required only if applicant is not the owner of the property subject to the application)

TYPE OF APPLICATION: **Special Administrative Permit**

I, _____SWEAR THAT I AM THE **LANDOWNER**

owner(s) name

OF THE PROPERTY LOCATED AT: _____

_____

AS SHOWN IN THE RECORDS OF _____ COUNTY, GEORGIA WHICH IS THE SUBJECT MATTER OF THE ATTACHED APPLICATION. I AUTHORIZE THE PERSON NAMED BELOW TO ACT AS THE APPLICANT IN THE PURSUIT OF THIS APPLICATION.

NAME OF APPLICANT (PRINT CLEARLY):

_____

_____

ADDRESS: _____

_____

TELEPHONE: _____ EMAIL: _____

_____
Signature of Property Landowner

_____
Print Name of Property Landowner

Personally Appeared
Before Me

_____

Who Swears That The
Information Contained
In this Authorization
Is True and Correct
To The Best of His or Her
Knowledge and Belief.

_____
Signature of Notary Public

_____
Date

City of Atlanta Office of Planning

SPECIAL ADMINISTRATIVE PERMIT (SAP) APPLICATION

Notice to Applicants

File # _____

The applicant hereby acknowledges notification that in the process of design review in connection with the issuance of a **Special Administrative Permit (SAP)**, the City of Atlanta Office of Planning (OOP) will only review such documents as are deemed necessary for the approval of a project concept in compliance with the district regulations set forth in the City of Atlanta Zoning Code. Such documents may include, without limitation, the elevations of the structures proposed and site plans specifying the arrangement of such structures and other features of the project, but generally will not include a full set of construction drawings. This level of review is for the purpose of determining compliance with those sections of the Zoning Code applying to the district where the project is located or to be located and to allow the applicant the flexibility to receive approval for a project concept without the requirement that a full set of construction drawings, that would otherwise be necessary to obtain a building permit, be prepared, presented and reviewed.

It is the applicant's duty to ensure that all drawings or plans, that may be required for further permitting of the actual construction of the project, will result in a finished project that complies with the elevations, site plan and other plans on which the SAP was granted. The applicant is further notified that neither the Office of Buildings nor any of the other City of Atlanta agencies that review any other part of the overall project plans for compliance to building codes, zoning codes, the tree preservation, the riparian buffers ordinance, land disturbance regulations, drainage and sewer capacity or any other regulations in effect at the time of plan review have the authority to approve any changes to the exterior appearance of structures or site plans in a SAP.

It is the responsibility of the applicant to ensure that any changes required, requested, or allowed by any other City agency or any other agency reviewing the plans during any part of the building permit process will not alter the exterior appearance of any structure or cause the relocation, rearrangement and/or reorientation of any feature of the site plan. Therefore, it is important for the applicant to be aware that even changes which may be in compliance with other codes, including without limitation, an increase to the height of the structure, whether resulting from changes to the foundation plan or the grading plan of the site, alterations to the interior layout of the structure that affect the location or size of exterior doors or windows, or changes to the method of construction for any floor of a structure or the roof of any structure, may affect the exterior appearance in a manner which could cause the finished structure to be out of compliance with the elevations approved by the OOP.

The applicant is further put on notice that the location of any feature specified on the site plan is not to be changed from that location which is specified on the site plan approved by the OOP. This includes, without limitation, any such changes that might affect the setbacks of any structure, the orientation of structures or features on the lot, including, without limitation, accessory buildings, the location and size of driveways, walkways, fences, parking pads, parking spaces, loading zones and service areas. It shall be the responsibility of the applicant to ensure that any changes required by any agency reviewing plans for the project remain consistent with the site plan and elevations approved by the OOP. It shall be the responsibility of the applicant, not the OOP, to monitor any plan changes during the permitting of the project to be sure that such changes do not affect the elevations and site plan approved by the OOP at the time of issuance of the SAP.

It is also the responsibility of the applicant to ensure that any changes made on site during the construction of the project, regardless of whether such changes are approved by a City building inspector, or representative of another City agency as being in compliance with the building codes or other applicable codes, do not result in a change to the exterior appearance of a structure or in a change to the site plan. The City of Atlanta Zoning Ordinance provides a process under which changes to the elevations and site plan in a SAP may be approved, however such approval is not guaranteed and the applicant is hereby notified that such changes are based on the application of the district regulations and not on the fact that a hardship, financial or otherwise may result if such permission is not given. The duty to adequately monitor the construction of the project to ensure compliance to the approved SAP and or any other City permit shall at all times be on the applicant, who assumes all risk of loss, financial or otherwise, from enforcement actions that result from the failure to comply with the SAP or any other City permit.

The applicant acknowledges that relief from any stop work order or other enforcement action, whether resulting from action taken by the OOP staff, the Office of Buildings staff or by the staff of any other City agency, must be appealed within the time and in the manner provided by the City Code. The applicant further acknowledges that the decision to apply to the OOP for permission to alter the approved plans is not an appeal of a stop work order or other enforcement action. The applicant acknowledges that it is solely within their own discretion to choose a process to resolve any dispute arising from the interpretation of any ordinance, the issuance of a stop work order or any other enforcement action and that the resolution of any such matter shall be made in compliance with the City Code and other applicable laws. The applicant further acknowledges that no written or oral representation of any City officer, employee, agent or elected official can waive or modify the City Code.

_____	_____	_____
Applicant Printed Name	Applicant Signature	Date

City of Atlanta Office of Planning

SPECIAL ADMINISTRATIVE PERMITS (SAP)

Submission Requirements for Shared Off-site Parking Arrangements

The Director of the Office of Planning or their designee may approve a shared off-site parking arrangement, as permitted by the corresponding zoning district, subject to the applicant providing the following documentation:

1. Written summary describing the shared parking arrangement which shall identify:
   a) Subject property: the principal property address and the lessee's name and contact information
   b) Off-site parking: the off-site property address and the lessor's (property owner) name and contact information

2. Written notarized consent of the property owners agreeing to the shared parking arrangement.

3. Property owner verification: affidavits, deeds or other documents that verify current property ownership information of the property providing the off-site parking.

4. Copies of valid notarized parking leases which shall include:
   a) The term of the lease and expiration date. Note: lapse of a required lease agreement may result in revocation of building permits/business licenses. Renewed leases shall be filed with the Office of Planning.
   b) A list of all executed lease agreements for the off-site parking location which are current at the time that the application is filed with the Office of Planning. For each agreement identify the tenant, the time frame, the number of parking spaces to be used, and the hours of operation during which the spaces are leased. If no agreements exist, submit affidavit from property owner stating to that affect.

5. Site plans for all properties to be included in the shared parking arrangement. Said plans shall include the following:
   a) Drawn to-scale that indicates the location and the layout of the proposed parking spaces in relation to the lessor's property.
   b) Documentation of all tenants sharing the parking facility, including:
      i. By type of use (i.e. retail, eating and drinking establishment, office, residential, etc.) and their individual tenant square footages to determine minimum parking requirements for each.
      ii. Hours of operation of each tenant.
   c) Illustrative indication of how such shared off-site parking spaces shall be clearly marked and signed reserved during the specified lessor's hours.

Sample site plan with applicable information:

Master Site Plan and Tenant Information

Site Plan of lessor property including property lines.

Site Plan of lessee's property with parking layout and including property lines.

Chart with the following information:
- Tenants by type of use
- Tenants square footages
- Tenants hours of operation

Key Plan showing both sites

Illustrative proposed signage or markings for spaces

Please note the following requirements are also generally applicable:

- Compliance with the criteria of Section 16-25.002(3).
- Compliance with the parking lot landscape requirements of the applicable zoning district and Chapter 158-30.
- On-street parking in the public right-of-way is typically not counted towards a parking arrangement.

City of Atlanta Office of Planning

SPECIAL ADMINISTRATIVE PERMIT (SAP) APPLICATION

Development Controls Specifications

File # _____

These forms are intended to assist applicants in preparing the required submission materials for a Special Administrative Permit approval. In addition to these forms to be completed by the applicant, all applicable specifications should be shown on the **site plan in chart form**. Items omitted will delay the plan review process. Refer to City of Atlanta Zoning Code (Chapters 8, 19, and 28) for clarification.

Definitions and Methods of Calculation

- Net Lot Area (NLA) = length of property line X width of property line
- GLA for corner lots = (NLA) + [(street "A" right-of-way width ÷2) X (street "A" length of property line)] + [(street "B" right-of-way width ÷2) X (street "B" length of property line) + [(street "A" right-of-way width ÷2) X (street "B" right-of-way width ÷2)]
- GLA (with only one front yard adjacent to street) = (NLA) + [(street right-of-way width ÷2) X (length of front property line)]
- GLA may include half of the right-of-way (including streets, parks, lakes and cemeteries) up to 50 feet in width.
- GLA shall not be used for calculating FAR for properties within single-family or two-family-zoned subareas of SPI districts.
- Building Lot Coverage provided = (net lot area minus area of building footprint) ÷ (net lot area)

Lot Size (in square footage)

Gross Land Area (GLA)	
Net Lot Area (NLA)	

Floor Area Ratio (FAR) – as applicable. Check which used for residential: ☐ GLA, or ☐ NLA

	Residential FAR Ratio	Residential Square Footage	Non-Residential FAR Ratio	Non-Residential Square Footage
Base Allowed				
Base Provided				
Bonus Allowed				
Bonus Provided				

Bonus FAR Program (check bonus utilized if applicable)

Transit Station ☐	Ground Floor Retail ☐	Open Space and New Streets ☐	Community Center Facilities ☐	Workforce Housing ☐

Residential Units — Total Provided: _____

Number of Units Provided (without bonus)	
Number of Bonus Units Provided (without workforce housing)	
Number of Bonus Workforce Housing Units Provided (20% required)	
Total Number of Units per Acre	

Building Coverage ☐ or Lot Coverage ☐ (check applicable as required per zoning district)

	Percentage (%)	Square Footage
Max. Permitted		
Provided		

Fenestration (% of each street-fronting facade calculated separately, per district regulations)

	Residential Façade Percentage (%)		Non-residential Façade Percentage (%)	
	on Local Street	on Arterial/Collector	on Local Street	on Arterial/Collector
Min. Required				
Provided (specify for each street)				

File # _____

Residential Open Space Requirements (refer to Chapter 28 for clarification)

Definitions and Methods of Calculation

- **LUI** = Land Use Intensity Ratios Table (per Section 16-08 R-G District Regulations)
- **TOSR** are calculated only for residential developments. TOSR includes the total horizontal area of uncovered open space plus ½ of the total horizontal area of covered open space subject to the limitations in Section 16-28.010 (4). Covered total open space is the open space closed to the sky but having two clear unobstructed open or partially open (50% or more) sides.
  - TOSR required = (LUI table) X (GLA).
  - TOSR provided = (GLA) – (area of building footprint) + (combined area of balconies and rooftop terraces).
- **UOSR** requirements are calculated using the residential FAR (of the corresponding net lot or GLA lot sized used to calculate FAR) for both residential and mixed-use developments. It does not include areas for vehicles. However, newly created on-street parking (outside of existing travel lanes) and new streets may be counted towards the UOSR calculations as specified in the district regulations.
  - UOSR required = (LUI table) X (the corresponding lot size used to calculate FAR).
  - If GLA is used for USOR, than the amount provided shall be = (NLA) – (area of building footprint + surface area of parking lots, and driveways) + (balconies, rooftop terraces, and landscaped areas on sidewalks within the adjacent right-of-way).

TOSR: Total Open Space Requirements for Residential Only Projects

(Not required in SPI-9, SPI-16, SPI-17, SPI-18, SPI-20, SPI-21, MRC, MR, or LW districts, or in mixed-use developments.)

	Ratio	Total Square Footage
Minimum Required		
Provided		

Square Footage breakout of UNCOVERED TOSR amount provided by the following:	
GLA minus building square footage	
Open exterior balconies (per Section 16-28 or district regs)	
Roof area improved as recreation space	

Square Footage breakout of COVERED TOSR amount provided by the following:	
Areas closed to the sky (roof) but having two sides with a minimum of 50% open	

UOSR: Usable Open Space Requirements for Residential and or Mixed-use Developments

(These are areas not counted towards Public Space Requirements)

	Ratio	Total Square Footage
Minimum Required		
Provided		

Square Footage Breakdown of UOSR amounts provided by the following:	
Balconies	
Rooftop Terraces	
Landscaped Areas and Plazas	
Portions of Sidewalks on Private Property	
Portions of Landscaped Areas in Right-of-way adjacent to Property	

File # _____

Non-Residential Public Space Requirements (refer to Chapter 28 for clarification)

PSR: Public Space Requirements for Non-residential & Mixed-use Developments *(These are areas not counted towards UOSR)*		
Public Space provided *= (square footage area of exterior space) + (square footage area of interior space)*		
	Percentage (%)	Total Square Footage
Minimum Required		
Provided		
Square Footage Breakdown of PSR amounts provided by the following:		
EXTERIOR (accessible to general public such as landscaped areas, plazas, terraces, patios, observation decks, fountains, sidewalks, common areas, open recreational spaces, etc.)		
INTERIOR (ground-level area accessible to the general public during normal business hours such as malls, galleries, atria, lobbies, concourses, plaza, walkways, fountains, landscape areas for public recreation, pedestrian seating, or eating and similar public amenities)		

Parking and Loading Requirements (refer to district regulations and Chapter 28 for clarification)

Residential Unit Breakout				
Number of Studios	Number of 1 BR	Number of 2 BR	Number of 3 BR	Number of 4 BR

On-site Parking Spaces	**Residential**	**Non-residential Uses**
Minimum Required		
Provided		
Maximum Allowed		
Bicycle Parking Spaces	**Residential**	**Non-residential Uses**
Minimum Required		
Provided		

On-site Loading Spaces (see applicable zoning district requirements or Section 16-028.015)		
	Residential/Hotel	**Non-residential Uses (break out by use)**
Minimum Required (specify for each use)		
Provided (specify for each use)		

TABLE I

LAND USE INTENSITY RATIOS

LUI Ratios Times *Gross Land Area*

	Floor Area (FAR)	*Total Open Space (TOSR)*	*Useable Open Space (UOSR)*	*Parking Spaces Per Lodging Unit*	*Parking Spaces Per Dwelling Unit*
Sector 1	.100	.80	.65	1.0	2.2
	.107	.80	.62	1.0	2.1
	.115	.79	.60	1.0	2.1
	.123	.79	.58	1.0	2.0
	.132	.78	.55	1.0	1.9
	.141	.78	.54	1.0	1.9
	.152	.78	.53	1.0	1.8
	.162	.77	.53	1.0	1.8
Sector 2	.174	.77	.52	.67	1.7
	.187	.77	.52	.67	1.7
	.200	.76	.52	.67	1.6
	.214	.76	.51	.67	1.6
	.230	.75	.51	.67	1.5
	.246	.75	.49	.67	1.5
	.264	.74	.48	.67	1.5
	.283	.74	.48	.67	1.4
	.303	.73	.46	.67	1.4
	.325	.73	.46	.67	1.3
	.348	.73	.45	.67	1.3
Sector 3	.373	.72	.45	.60	1.3
	.400	.72	.44	.60	1.2
	.429	.72	.43	.60	1.2
	.459	.72	.42	.60	1.2
	.492	.71	.41	.60	1.1
	.528	.71	.41	.60	1.1
	.566	.71	.40	.60	1.1
	.606	.70	.40	.60	1.0
	.650	.70	.40	.60	1.0
	.696	.69	.40	.60	.99
Sector 4	.746	.69	.40	.45	.96
	.800	.68	.40	.45	.93
	.857	.68	.40	.45	.90
	.919	.68	.40	.45	.87
	.985	.68	.40	.45	.85
	1.06	.68	.40	.45	.83
	1.13	.67	.41	.45	.81
	1.21	.67	.41	.45	.79
	1.30	.67	.42	.45	.77
	1.39	.68	.42	.45	.75
	1.49	.68	.43	.35	.73
Sector 5	1.60	.68	.43	.35	.71
	1.72	.68	.45	.35	.69
	1.84	.69	.46	.35	.67
	1.97	.70	.47	.35	.65
	2.11	.71	.49	.35	.63
	2.26	.72	.50	.35	.61
	2.42	.75	.51	.35	.60
	2.60	.76	.52	.35	.58
	2.79	.81	.56	.35	.56
	2.99	.83	.57	.35	.55
	3.20	.86	.61	.35	.54
Sector 6	3.43	.91	.64	.27	.53
	3.63	.95	.67	.27	.52
	3.95	1.00	.71	.27	.50
	4.24	1.05	.75	.27	.49
	4.55	1.11	.79	.27	.48
	4.88	1.17	.83	.27	.46
	5.23	1.24	.89	.27	.45
	5.60	1.31	.94	.27	.44
	5.99	1.39	.99	.27	.43
	6.40	1.46	1.05	.27	.42

See section 16-28.010 for definitions of terms. See also section 16-28.00867.
(Code 1977, § 16-08.010)

City of Atlanta
Chapter 30 BUSINESSES*
ARTICLE XVII. PARKING LOTS AND PARKING GARAGES*

Section 30-1205. Parking facility reservoirs; required.

a) In facilities where attendants, ticket dispensers or other devices are used to regulate or control entering vehicles, the reservoir shall be located between the street right-of-way and the point of control. Each vehicle space in the reservoir shall be 22 feet long and ten feet wide and, in addition, sufficient space shall be provided for turning and maneuvering.
b) All new off-street parking facilities, with the exception of residential and apartment parking facilities of less than 50 parking spaces, shall provide, as a minimum, the number of vehicle spaces in the inbound reservoir as required by this section.
c) In parking facilities of the attendant-parking type, the number of vehicle spaces in the inbound reservoir shall be one percent of the total parking capacity of the facility or at least two spaces, whichever is greater. Where multiple inbound lanes are used, each lane shall provide two or more vehicle spaces in the reservoir.
d) In parking facilities of the self-parking type, the number of inbound reservoir spaces shall be determined in the following manner:
   1) Facilities with capacities of 300 parking spaces or less shall provide two inbound reservoir spaces.
   2) Facilities with capacities exceeding 300 parking spaces shall provide two parking spaces plus one additional inbound reservoir space for each additional 100 parking spaces or fraction thereof.
   3) Where multiple inbound lanes are used, each lane shall provide two or more vehicle spaces in the reservoir.

Department of Public Works – Office of Transportation
Parking Modules

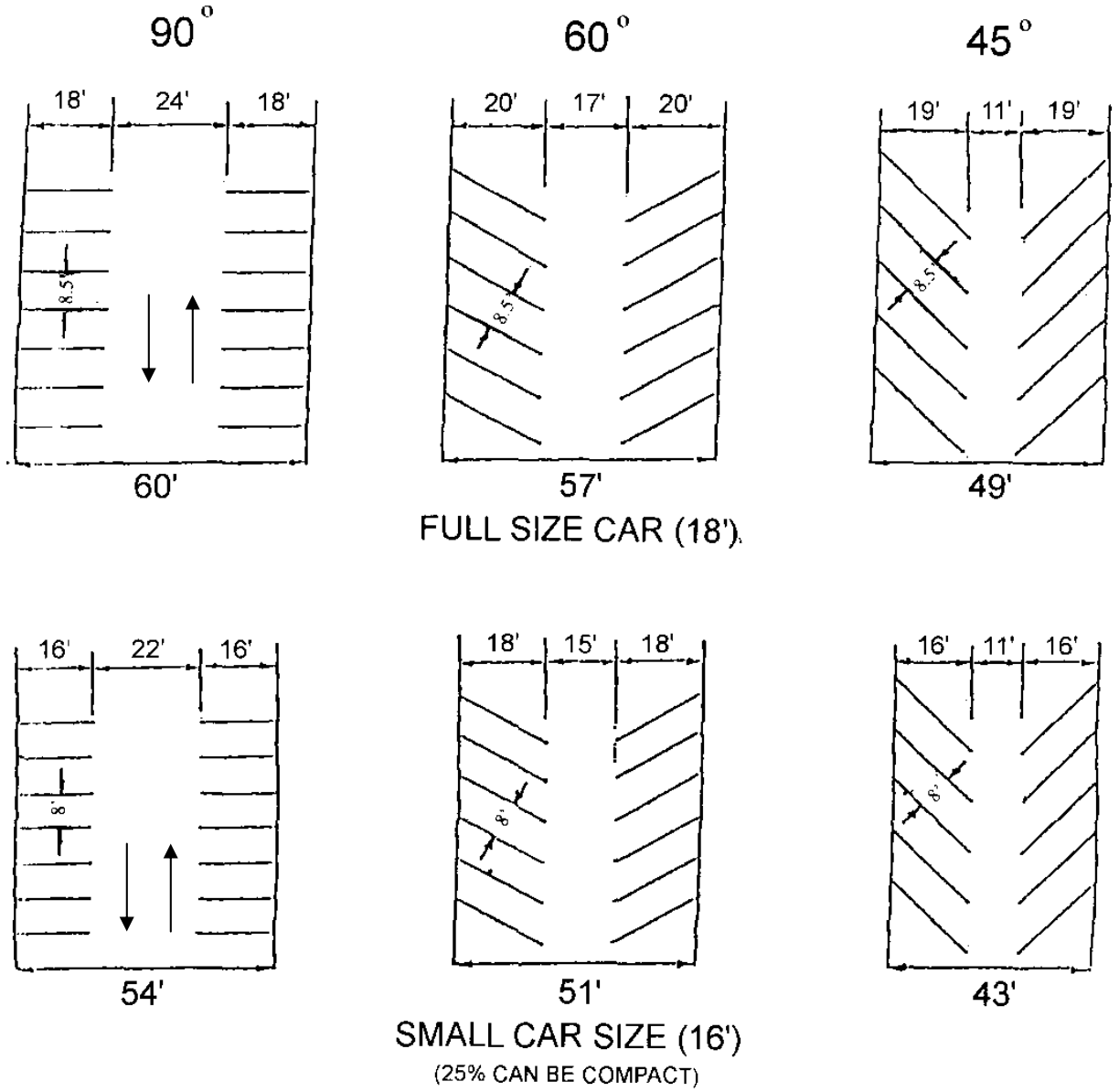

* In SPIs 1, 9, 15, 16, 17, 18, 20, 21, 22, the Beltline Overlay District, and MR, LW, NC, MRC districts these requirements shall apply to all surface parking lots regardless of size. Refer to the zoning district regulations for any other requirements which may also be applicable, in addition to those in Chapter 158 (noted below).

Section 158-30. Parking lot requirements.

The owner of any surface parking lot that is being built and/or resurfaced, and that will have a total of 30 or more parking spaces, whether primary or accessory in use, and whether commercial or noncommercial, must present a plan to the city arborist for approval, indicating that the parking lot will meet the minimum barrier curb and landscaping requirements as follows:

(1) **Barrier curbs shall be installed around the perimeter of the parking lot and around landscaped areas** that are required in this article, except where the perimeter abuts an adjacent building or structure and at points of ingress and egress into the facility, so as to prevent encroachment of vehicles onto adjacent property, rights-of-way and landscaped areas.
(2) **Barrier curbs shall be a minimum of six inches in height and a minimum of eight inches in width and permanent in nature**. Barrier curbs shall be concrete or stone. Such curbs shall be securely installed and maintained in good condition.
(3) Where the end of a parking space abuts a landscaped area, barrier curbs may be placed in the parking space at a maximum of two feet from the end of the parking space. This two-foot wide area may have the pavement removed and be developed as part of the required landscaped area.
(4) **Surface parking lots shall have a minimum landscaped area equal to at least 10% of the paved area within such lot**. In no case shall a parking lot owner be required to provide landscaped areas that exceeds ten percent of the paved area. The director of the bureau of buildings, in consultation with the city arborist, shall have the authority to grant a variance from the requirements of this subsection if: the parking lot existed prior to 1977; and the director of the bureau of buildings finds that the applicant's circumstances meet the requirements set forth in subsection 158-30(15); and the director of the bureau of buildings finds that it is impossible to achieve the minimum landscaping requirement. For surface parking lots with fewer than 30 spaces, this variance may reduce or completely eliminate the amount of landscaped area required. For surface parking lots with 30 or greater spaces, this variance may reduce the landscaping requirement, but in no event shall the parking lot be permitted to have landscaped area that is less than ten percent of the paved area.
(5) **A minimum of one (1) tree per eight (8) parking spaces shall be included in the required landscaped areas**. For the purpose of satisfying this requirement, existing trees that are two and one-half inches or more in caliper as measured at a height of 36 inches above ground level shall be considered to be equivalent to one or more newly planted trees on the basis of one tree for each two and one-half inches of caliper.
(6) In addition to trees, ground cover shall also be provided in order to protect tree roots and to prevent erosion. Ground cover shall consist of shrubs, liriope, pine bark mulch and other similar landscaping materials.
(7) **Shrubs shall be maintained at a maximum height of two and one-half (2.5) feet, except where such shrubs are screening the parking surface from an adjacent residential use. (Minimum height of 2 feet is required in SPI, BL, LW, MR, NC, and MRC districts).**
(8) If landscaped areas are in the interior of a parking lot they shall be a minimum of six (6) feet in width and six (6) feet in length with a minimum area of 36 square feet.
(9) **Continuous landscaped buffer strips shall be constructed along sidewalks and public rights-of-way where surface parking lots are adjacent to such sidewalks or public rights-of-way except at points of ingress and egress into the facility**. Such landscaped buffer strips shall be a minimum of five (5) feet in width and shall contain, in addition to ground cover, trees planted a maximum of 42 1/2 feet on center along the entire length.
(10) **Newly planted trees shall be a minimum of two and one-half (2.5) inches in caliper as measured at a height six inches above ground level**, shall be a minimum of ten feet in height, shall have a 40-foot minimum mature height and shall be drought-tolerant. Trees shall be planted at a minimum of 30 inches from any barrier curb so as to prevent injury to trees from vehicle bumpers.
(11) **Where landscaped area is located adjacent to vehicle overhangs, the trees shall be planted in line with the side stripes between parking spaces in order to avoid injury to trees by vehicle bumpers.**
(12) All landscaped areas, including trees located in the public right-of-way that are counted in the fulfillment of this requirement, shall be properly maintained in accordance with approved landscape plans. If a tree or any plant material dies, it shall be replaced within six months so as to meet all requirements of this section and to allow for planting in the appropriate planting season.
(13) If it is determined by the city arborist that implementation of these regulations will result in the loss of parking spaces in existing lots, the director of the bureau of traffic and transportation may increase the allowable percentage of compact car spaces from 25 percent up to 35 percent so as to minimize the loss of parking spaces, but only with the approval of the city arborist.
(14) Notwithstanding subsection (13) of this section, existing parking lots shall not be required to reduce the number of parking spaces by more than three percent as a result of implementing these landscaping regulations.
(15) Upon written application by any person subject to the provisions of this section, the director of the bureau of buildings is hereby authorized to grant administrative variances to the requirements of this section only upon making all of the following findings:
    (a) There are extraordinary and exceptional conditions pertaining to the particular piece of property in question because of its size, shape, topography, subsurface conditions, overhead structures or the existence of sufficient trees in the public right-of-way within ten feet of the property line.
    (b) Such conditions are peculiar to the particular piece of property involved; and
    (c) Relief, if granted, would not cause substantial detriment to the public good or impair the purposes and intent of this article and of part 16 of this Code.

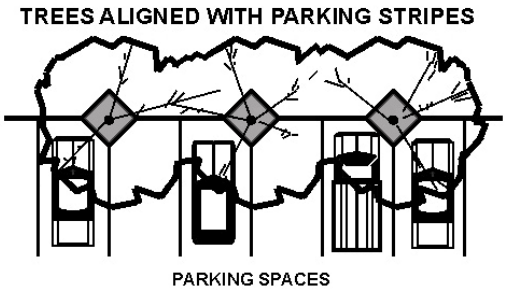

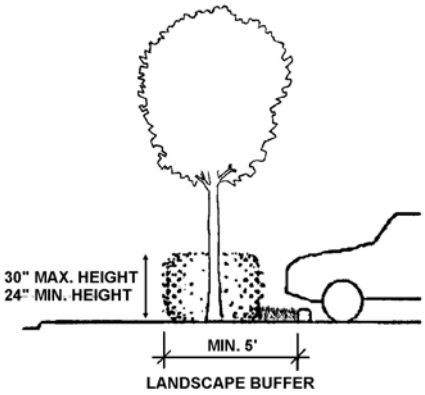

City of Atlanta
Driveway Apron

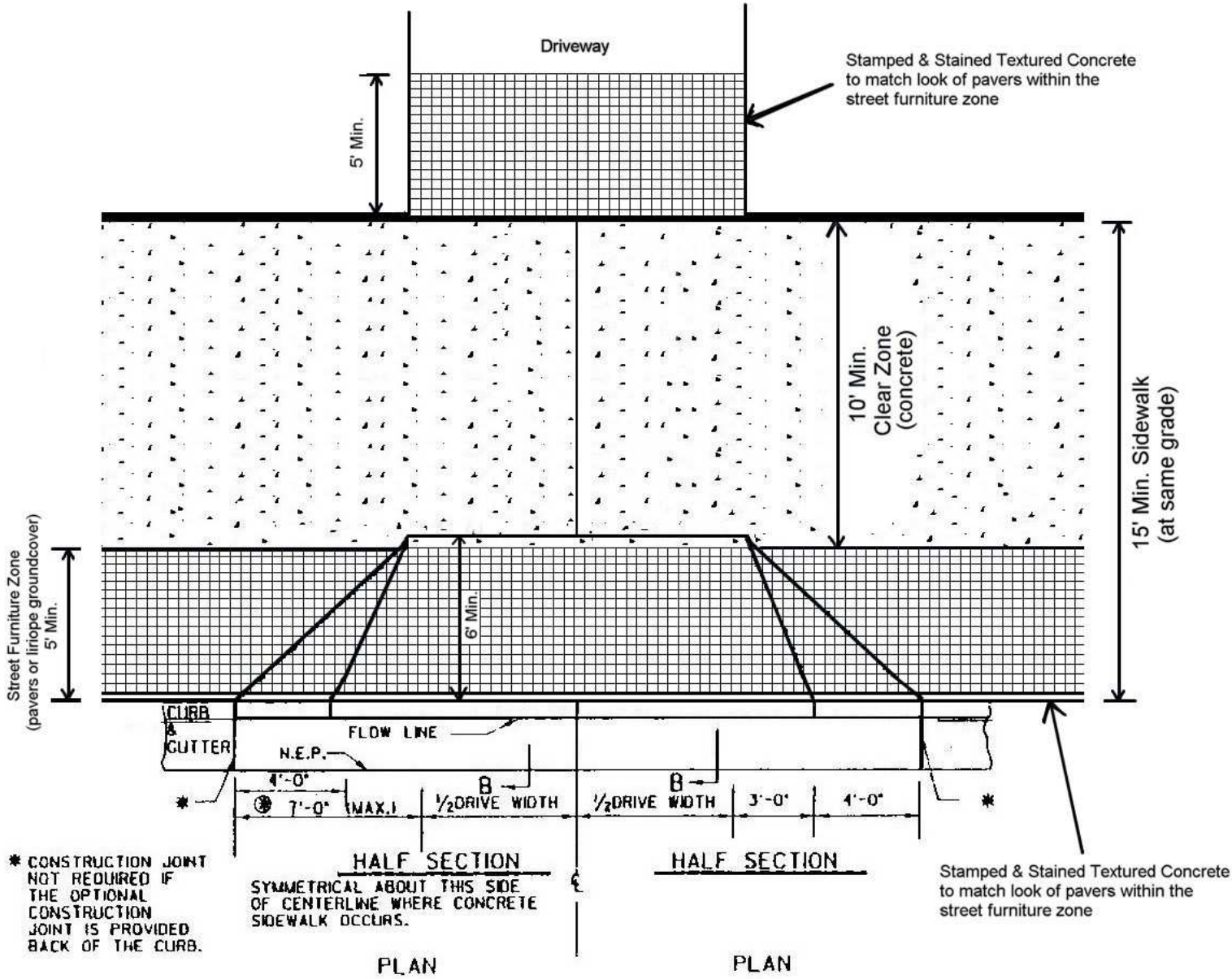

* CONSTRUCTION JOINT NOT REQUIRED IF THE OPTIONAL CONSTRUCTION JOINT IS PROVIDED BACK OF THE CURB.

⊛ 7'-0" OR DISTANCE EQUAL TO THAT FROM BACK OF CURB TO BACK OF SIDEWALK, WHICHEVER IS LESSER

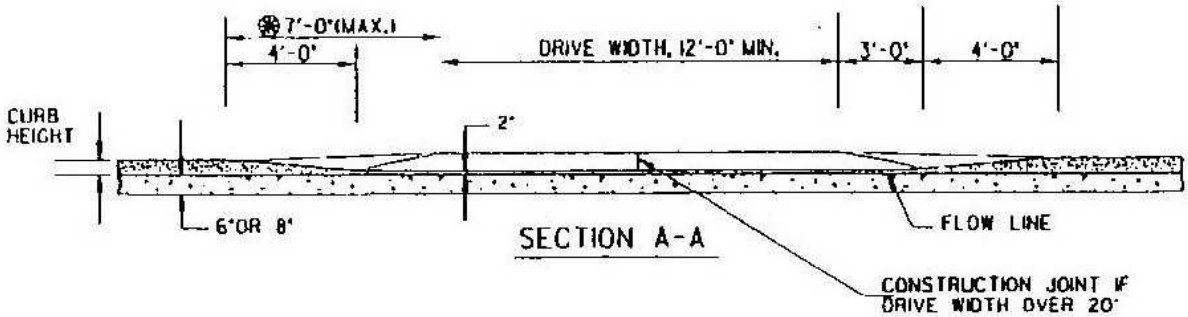

WHERE THE SHOULDER OR SIDEWALK IS SLOPED AWAY FROM THE ROAD)

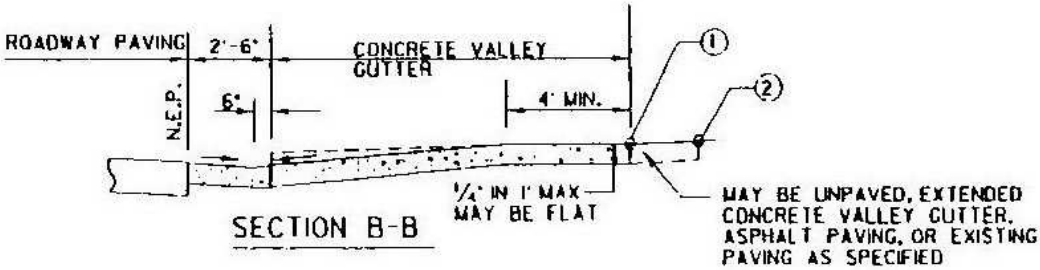

City of Atlanta
Bicycle Rack Standards

All elements painted Tnemic Black or 'CODA GREEN' (color Pantone 5535)

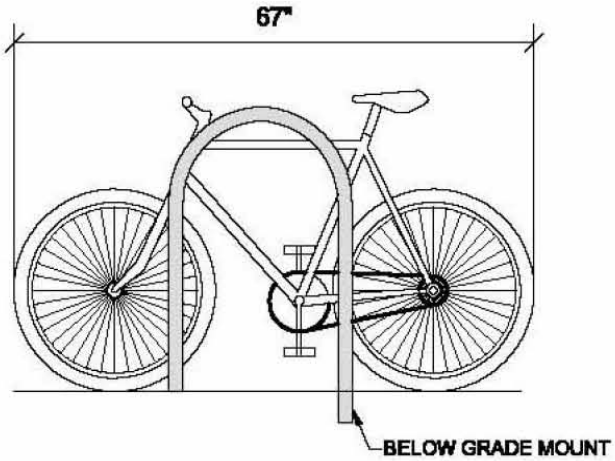

Minimum required number as specified per zoning district or per Section 16-28.014(6)

1) **<u>Outdoor bike racks:</u> securely attached to concrete base with a <u>below grade mount</u> and shall be:**
   a) **<u>Product</u>: Saris Product Model 2112, or equivalent**
   b) **<u>Locations</u>:**
      - **Furniture zone: shall be installed parallel to the street within the street furniture zone a minimum of 36 inches from face of curb; or**
      - **Supplemental zone: a minimum of 36 inches from the building façade.**
2) **<u>Covered bike racks</u>: located near pedestrian entrances in the building/parking structure at nearest ground floor. Other rack products allowed.**

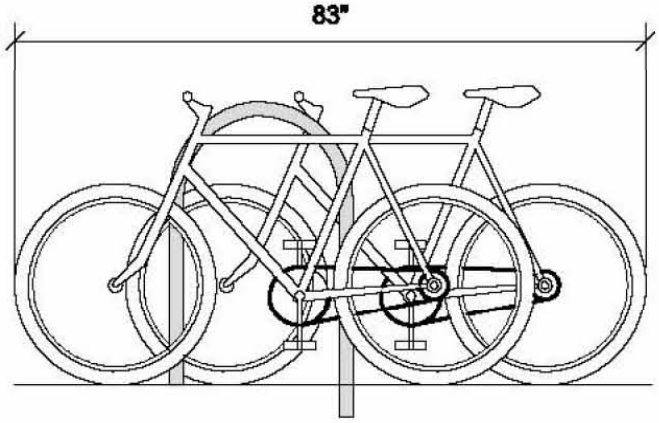

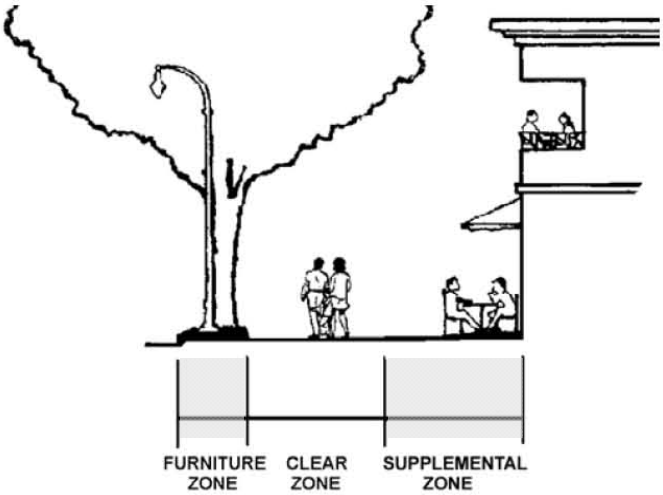

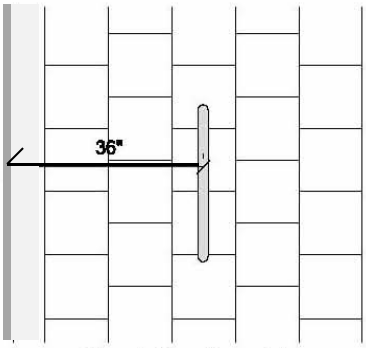

Street Furniture Zone

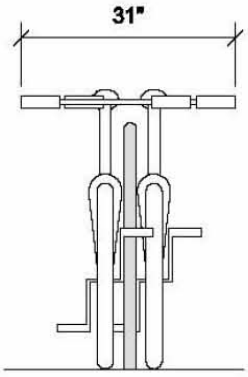

City of Atlanta
Street Furniture Standards

(All elements painted in Tnemec 'CODA Green" color (Pantone 5535))

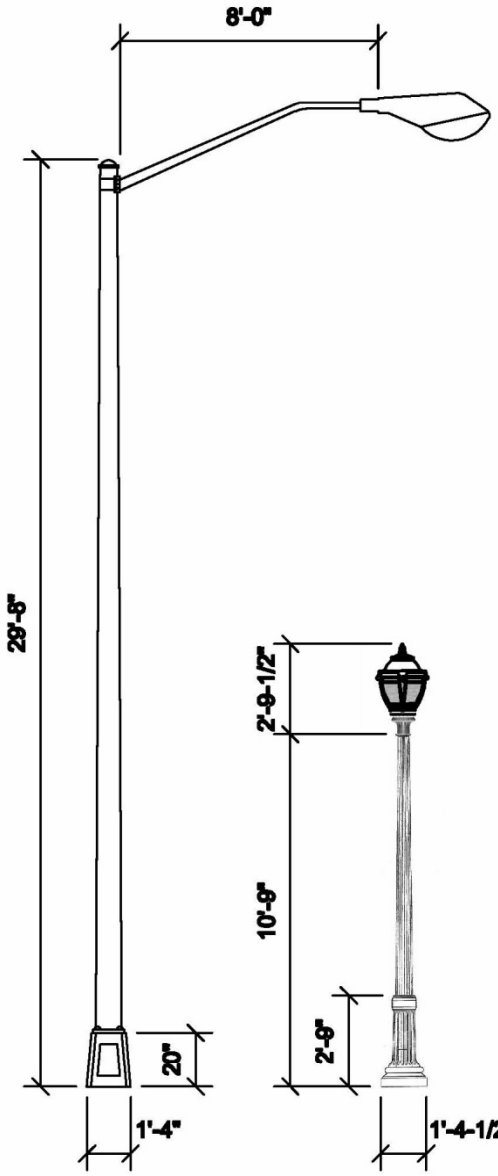

Type "CH"
CobraHead (CH)

Type "C"
Atlanta Light

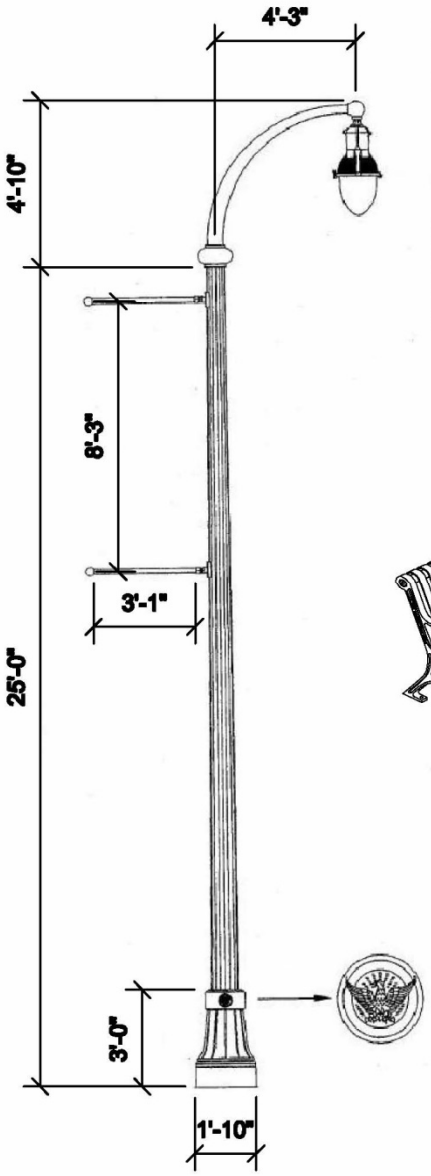

Type "A"
Atlanta Light

Install street lights 36" O.C. from the face of curb.

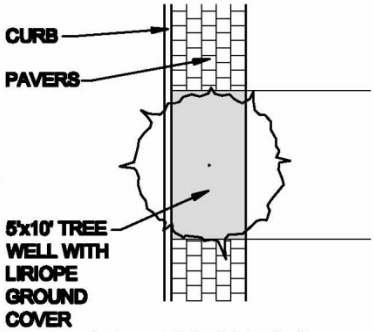

Tree Well Detail

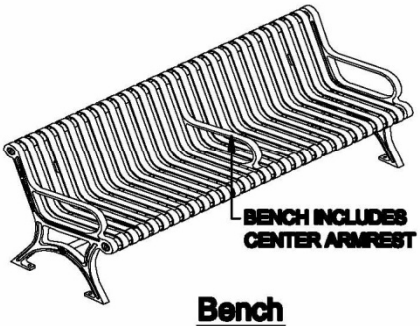

Bench
Victor Stanley
Model CR-96 (With Vertical Steel Scrolls)
or equivalent

Trash Receptacle
Victor Stanley
Model SD-42
or equivalent

Contact Rick White in the Public Works Department for detailed light specifications at 404-330-6501

City of Atlanta
Street Light & Street Tree Spacing

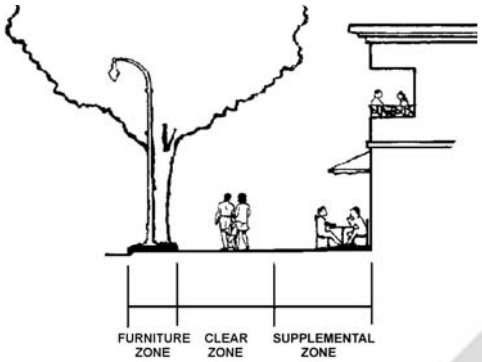

Sidewalk section

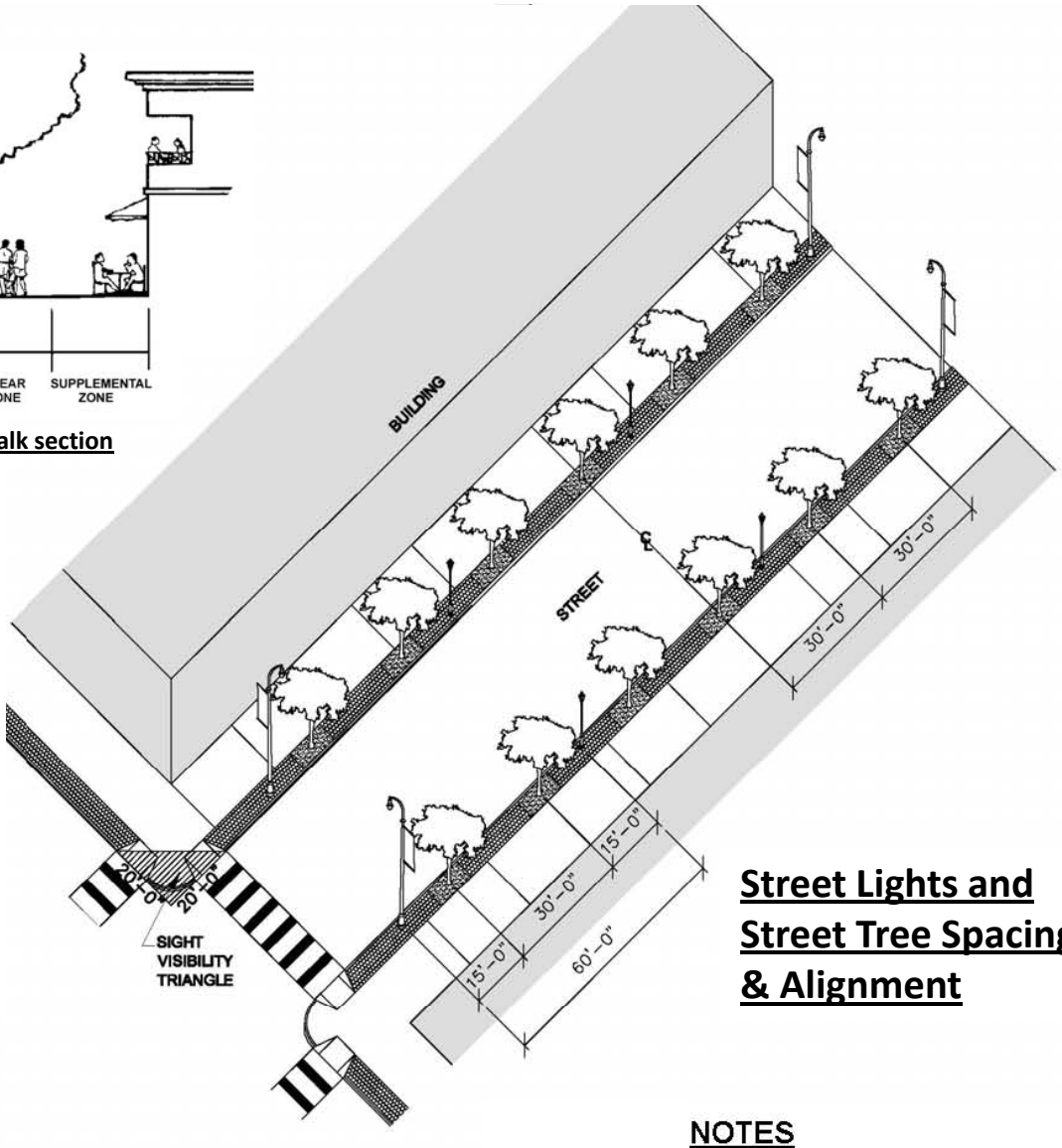

Street Lights and Street Tree Spacing & Alignment

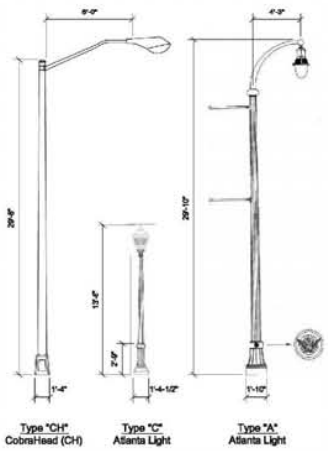

LEGEND

- Pedestrian Light - type "C"
- Street Light - type "A" or "CH"
- Center Line

NOTES

1. Align trees and lights at the center lines on opposite sides of street.
2. Light spacing shall be 60 feet on-center.
3. Street tree spacing shall be 30 feet on-center.
4. Street trees must be located outside the sight visibility triangle.
5. One street tree species to be planted per street.
6. Each street shall have a different street tree. The same species shall not be planted on connecting or immediately adjacent streets.

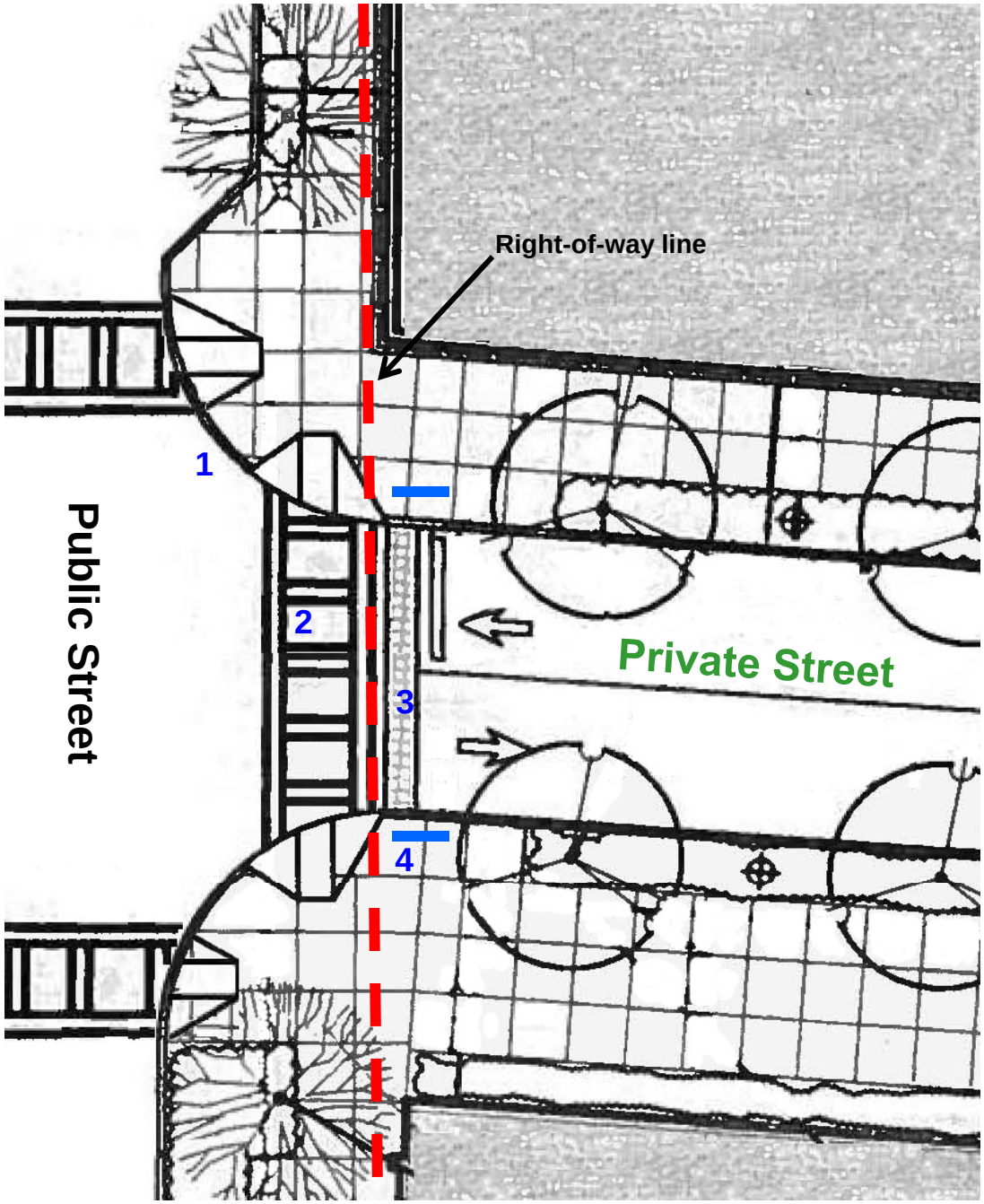

Drawing for illustrative purposes

City of Atlanta Street Intersection/Signalized Curb Cut Design

Street intersections and or driveway curb cuts located at signalized intersections shall be designed with the following components:

1) *Curb radius installed at street corners; and*
2) *Crosswalks/ADA ramps installed per City Standards; and*
3) *A 2ft wide band of special pavers or stamped asphalt installed behind the crosswalk, on private property; and*
4) *Street nameplates installed in the sidewalk pavement parallel to the street curb; and*
5) *Street name signs installed with reflective letters and background on both sides. Green letters (at least 4 inches tall – upper case and 3 inches tall – lower case) on white background (at least 6 inches tall) with green border.*