CITY OF ATLANTA STANDARD DETAILS FOR WORK IN THE PUBLIC RIGHT-OF-WAY

2012 Edition

Kasim Reed
Mayor

Richard Mendoza
Department of Public Works

Jo Ann Macrina, P.E.
Department of Watershed Management

www.atlantaga.gov

COA Detail Index

Completed by: Atlanta Services Group
Conversion/Project Start date: October 2011

Sanitary Sewer

Done	File Name (.dgn)	Original Dat	Discription of Detail	Type
✓	SS-G_BC001	11/1/04	BOOT CONNECTION	Main Connection
✓	SS-G_DM001	11/1/04	DEFLECTION TEXT MANDREL	Part
✓	SS-G_FC001	11/1/04	LIGHT CASTING FRAME AND COVER FOR PRECAST SLABS	MH Cover
✓	SS-G_MC001	11/1/04	MANHOLE COLLAR	Manhole - Collar
✓	SS-G_MH001	11/1/04	MANHOLE BASE	Manhole - Structure
✓	SS-G_MH004	11/1/04	LARGE DIAMETER MANHOLE BASE	Manhole - Large Base
✓	SS-G_MH009	1/1/97	MANHOLE PLAN AND DIAMETERS	Manhole - Structure/Dimensions
✓	SS-G_MS001	11/1/04	MANHOLE STEPS	Manhole - Steps
✓	SS-G_SC001	11/1/04	SERVICE CONNECTION ON NEW SEWERS	Service
✓	SS-G_SC002	11/1/04	DEEP SEWER CONNECTION	Service
✓	SS-G_SC003	11/1/04	SERVICE CONNECTION	Service
✓	SS-G_SC004	11/1/04	SERVICE CONNECTION CLEANOUT	Cleanout
✓	SS-G_SC005	11/1/04	SANITARY CLEANOUT BOX	Cleanout Box
✓	SS-G_WC001	11/1/04	WATER STOP COLLAR	Collar/Structure

Sanitary General

Done	File Name (.dgn)	Original Dat	Discription of Detail	Type
✓	SG-G_FC003	11/1/04	WATERTIGHT FRAME AND COVER	Cover
✓	SG-G_FC002	11/1/04	SOLID FRAME AND COVER	Cover
✓	SG-G_MH003	11/1/04	VENTED FRAME AND COVER	Cover
✓	SG-G_MH005	11/1/04	MANHOLE BASE WITH DROP CONNECTION	Manhole base/Drop
✓	SG-G_MH006	11/1/04	PIPED INSIDE DROP CONNECTION FOR MANHOLES	Manhole/Drop
✓	SG-G_MH007	11/1/04	MANHOLE OVER EXISTING SEWER	Manhole/Doghouse
✓	SG-G_MH008	11/1/04	SHALLOW MANHOLE	Manhole

Water

Done	File Name (.dgn)	Original Dat	Discription of Detail	Type
✓	WR-G_AN001	11/1/04	TYPICAL STRAP AND ROD DETAIL	Clamp
✓	WR-G_AN004	11/1/04	TYPICAL ANCHORS	Anchors
✓	WR-G_AN004	10/1/04	PIPE HANGER	Hanger
✓	WR-G_AN006	11/1/04	TYPICAL HANGER DETAIL FOR CON. BEAM BRIDGES	Hanger
✓	WR-G_CP001	10/1/04	TYPICAL PIPE-CASING CORROSION PROTECTION TEST LEADS	Casing
✓	WR-G_CP002	10/1/04	TYP. CORROSION PROTECTION INTERFERENCE TEST LEADS	Leads
✓	WR-G_CP003	11/1/04	TYPICAL CATHODIC PROTECTION BONDS	Protection
✓	WR-G_CP004	11/4/04	TYPICAL WATERPROOF ANODE CONNECTIONS	Protection
✓	WR-G_CP005	11/1/04	PROCEDURE FOR MAKING BRAZED CONNECTION	Connection
✓	WR-G_CP006	10/1/04	TYPICAL MAGNESIUM ANODE INSTALLATION	Anode
✓	WR-G_CR001	10/1/04	TYPICAL RAILROAD OR FREEWAY CROSSING	Crossing
✓	WR-G_DF001	11/1/04	MAXIMUM PERMISSIBLE JOINT DEFLECTIONS	Deflections
✓	WR-G_FC004	10/1/04	TYPICAL MANHOLE FRAME AND COVER ASSEMBLY	Frame and Cover
✓	WR-G_FH001	10/1/04	TYPICAL FIRE HYDRANT	Fire Hydrant
✓	WR-G_FH002	11/1/04	TYPE "A" TYPICAL FIRE HYDRANT	Fire Hydrant
✓	WR-G_FH003	11/1/04	TYPE "B" TYPICAL FIRE HYDRANT	Fire Hydrant
✓	WR-G_ME001	10/1/04	TYPICAL METER BOX ASSEMBLY	Meter box
✓	WR-G_ME002	11/1/04	TYPICAL F.M. METER INSTALLATION	F.M. Meter
✓	WR-G_ME003	11/1/04	TYPICAL METER BOX LID AND FRAME TRAFFIC TYPE	Meter box
✓	WR-G_ME004	11/1/04	TYPICAL METER BOX LID AND FRAME SIDEWALK TYPE	Meter box
✓	WR-G_MJ002	11/1/04	MECHANICAL JOINT BOLT USAGE CHART	MJ Chart
✓	WR-G_MT001	10/1/04	TYPICAL WATER MAIN TERMINATION	WM Termination
✓	WR-G_PR001	7/1/84	STANDARD REINFORCED CONCRETE PIER 1 OF 3	Conc. Pier

✓	WR-G_PR001	7/1/84	STANDARD REINFORCED CONCRETE PIER 2 OF 3	Conc. Pier
✓	WR-G_PR001	7/1/84	STANDARD REINFORCED CONCRETE PIER 3 OF 3	Dimensions
✓	WR-G_PR002	7/1/84	STANDARD CUT-WATER PIERS 1 OF 6	Cut Piers
✓	WR-G_PR002	7/1/84	STANDARD CUT-WATER PIERS 2 OF 6	Cut Piers
✓	WR-G_PR002	7/1/84	STANDARD CUT-WATER PIERS 3 OF 6	Cut Piers
✓	WR-G_PR002	7/1/84	STANDARD CUT-WATER PIERS 4 OF 6	Cut Piers
✓	WR-G_PR002	7/1/84	STANDARD CUT-WATER PIERS 5 OF 6	Cut Piers
✓	WR-G_PR002	7/1/84	STANDARD CUT-WATER PIERS 6 OF 6	Cut Piers
✓	WR-G_PR003	7/1/84	STANDARD PIER TO SUPPORT 42" STEEL	Pier
✓	WR-G_PR003	7/1/84	STANDARD PIER TO SUPPORT 42" STEEL	Dimensions
✓	WR-G_PV001	10/1/04	TYPE I PAVEMENT REPLACEMENT	Pavement
✓	WR-G_PV002	10/1/04	TYPE II PAVEMENT REPLACEMENT	Pavement
✓	WR-G_PV003	10/1/04	TYPE III PAVEMENT REPLACEMENT	Pavement
✓	WR-G_PV004	11/1/04	SIDEWALK, CURB AND GUTTER REPAIRS	Sidewalk, gutter repairs
✓	WR-G_PV005	11/1/04	DRIVEWAY CUT REPAIRS CONCRETE, GRAVEL & ASPHALT	Cut repairs
✓	WR-G_RD001	10/1/04	UNDERGROUND UTILITY TYPICAL CORSS SECTION	UTILITIES
✓	WR-G_SP001	10/1/04	TYPICAL SPUD INSTALLATION MAIN IN STREET	Spud or stub in street
✓	WR-G_SP002	10/1/04	TYPICAL SPUD INSTALLATION MAIN IN SIDEWALK	Spud or stub in sidewalk
✓	WR-G_SP003	10/1/04	TYPICAL SPUD INSTALLATION MAIN IN OPPOSITE SIDEWALK	Spud or stub in sidewalk
✓	WR-G_SV002	10/1/04	TYPICAL LONGSIDE & SHORTSIDE SERVICE INSTALLATION	Service
✓	WR-G_SV003	11/1/04	TYPICAL FIRE-SERVICE INSTALLATION	Fire Service
✓	WR-G_SV004	10/1/04	WATER SERVICE AND METER CONNECTION	Service and meter
✓	WR-G_SV005	11/1/04	TYP. WATER SERVICE & METER CONN. W/ RETRO SETTERS	Service and meter
✓	WR-G_TH004	11/1/04	TYPICAL DOWNWARD THRUST BLOCK	Thrust block
✓	WR-G_TH005	11/1/04	TYPICAL HORIZONTAL THRUST BLOCK	Thrust block
✓	WR-G_TH006	10/1/04	TYPICAL BLOCKING	Blocking
✓	WR-G_TP001	11/1/04	TYPICAL CUTS FOR STATE AND HIGHWAY PERMITS	Cut permits
✓	WR-G_TR001	10/1/04	TYPICAL WATERLINE TRENCH SECTION	Trench
✓	WR-G_TR002	10/1/04	TYPICAL WATER MAIN BEDDING & HAUNCHING	Bedding
✓	WR-G_TR003	10/1/04	TRENCH TERMINOLOGY	Trench
✓	WR-G_TS002	10/1/04	TYPICAL TEST STATION AT THE JUNC. OF NEW & EXIST. PIPE	Test Station
✓	WR-G_TS003	10/1/04	TYPICAL PIPELINE TEST STATION	Test Station
✓	WR-G_VB001	11/1/04	TYPICAL UNDERGROUND VALVE BOX	Valve Box
✓	WR-G_VB002	10/1/04	TYPICAL 4"-12" VALVE BOX ASSEMBLY	Valve Box top
✓	WR-G_VB003	10/1/04	TYPICAL 4"-12" VALVE BOX ASSEMBLY	Valve Box bottom
✓	WR-G_VL001	10/1/04	TYPICAL MANUAL AIRE VALVE	Air Valve
✓	WR-G_VL002	10/1/04	TYPICAL AIR VALVE AUTOMATIC	Air Valve
✓	WR-G_VL003	11/1/04	TYPICAL WATER MAIN AND VALVE ABANDONMENT	Valve abandon
✓	WR-G_VL004	11/1/04	TYPICAL DETECTOR CHECK VALVE INSTALLATION	Valve detector check
✓	WR-G_VN001	11/1/04	TYPICAL BURIED GATE VALVE BOX AND CONC. PAD	Valve box, pad
✓	WR-G_VM002	10/1/04	WATER VALVE MARKER	Valve Marker
✓	WR-G_VT001	7/1/84	TYPICAL 4'-6' VALVE VAULT	Vault
✓	WR-G_VT002	7/1/84	TYPICAL 6'-12' VALVE VAULT	Vault
✓	WR-G_VT003	10/1/04	TYPICAL VALVE VAULT 16" AND LARGER VALVES	Vault

Storm Water

Done	File Name (.dgn	riginal Dat	Discription of Detail	Type
✓	SW-G_CB001	11/1/04	TYPE "C" CATCH BASIN	Catch Basin
✓	SW-G_CB002	11/1/04	MODIFIED TYPE "C" CATCH BASIN	Catch Basin
✓	SW-G_CB003	11/1/04	TYPE "B" CATCH BASIN	Catch Basin
✓	SW-G_CB004	8/1/73	STANDARD CURB CATCH BASIN TYPE "A"	Catch Basin
✓	SW-G_CB005	7/1/66	STANDARD TRAP CATCH BASIN TYPE "A"	Catch Basin
✓	SW_G_CB007	8/1/93	STANDARD CURB CATCH BASIN 1 OF 2 MULIT. INSTALLATION	Catch Basin
✓	SW-G_CB008	N/A	TYPE "B" CATCH BASIN	Catch Basin
✓	SW-G_CB009	7/1/67	STANDARD CURB CATCH BASIN 2 OF 2 MULTI. INSTALLATION	Catch Basin
✓	SW-G_CB010	9/1/85	TRIPLE CATCH BASIN TYPE "B" (TRAPPED)	Catch Basin
✓	SW-G_CB011	1/1/68	TYPE "C" CATCH BASIN	Catch Basin
✓	SW-G_CB012	7/1/84	TYPE "C" CATCH BASIN	Catch Basin
✓	SW-G_CB014	9/1/93	STANDARD CATCH BASIN CASTING	Casting
✓	SW-G_CB015	7/1/84	STANDARD HEAVY-DUTY CATCH BASIN CASTING	Casting
✓	SW-G_CB016	7/1/84	TYPE "B" (MOD.) CATCH BASIN CASTING	Casting
✓	SW-G_CW001	7/1/84	STANDARD COLLAR WALL	Concrete
✓	SW-G_DI001A	11/1/04	STANDARD DROP INLET	Drop Inlet
✓	SW-G_DI002	11/1/04	STANDARD DROP INLET YARD INLET	Yard Inlet
✓	SW-G_DI004	7/1/84	STANDARD DROP INLET (TRAPPED)	Drop Inlet
✓	SW-G_GR001	1/1/97	STANDARD GRATE AND FRAME	Grate
✓	SW-G_GR005	1/1/97	BICYCLE SAFETY GRATE	Grate
✓	SW-G_HW001	7/1/84	STANDARD PRECAST CONC. HEADWALL 18"-36" 1 OF 3	Headwall
✓	SW-G_HW001	7/1/84	STANDARD PRECAST CONC. HEADWALL 18"-36" 2 OF 3	Headwall

c

✓	SW-G_HW001	7/1/84	STANDARD PRECAST CONC. HEADWALL 18"-36" 3 OF 3	Headwall
✓	SW-G_HW002	7/1/84	STANDARD HEADWALL 1 OF 2	Headwall
✓	SW-G_HW002	7/1/84	STANDARD HEADWALL 2 OF 2	Headwall
✓	SW-G_HW003	7/1/84	STANDARD RUBBLE HEADWALL 1 OF 2	Headwall
✓	SW-G_HW003	7/1/84	STANDARD RUBBLE HEADWALL 2 OF 2	Headwall
✓	SW-G_HW004	7/1/84	TYPE C HEADWALL 1 OF 3	Headwall
✓	SW-G_HW004	7/1/84	TYPE C HEADWALL 2 OF 3	Headwall
✓	SW-G_HW004	7/1/84	TYPE C HEADWALL 3 OF 3	Dimensions
✓	SW-G_HW005	7/1/84	TYPE C HEADWALL 1 OF 2	Headwall
✓	SW-G_HW005	7/1/84	TYPE C HEADWALL 2 OF 2	Dimensions
✓	SW-G_HW006	7/1/84	TYPE E HEADWALL 1 OF 2	Headwall
✓	SW-G_HW006	7/1/84	TYPE E HEADWALL 2 OF 2	Dimensions
✓	SW-G_HW007	7/1/84	TYPE F HEADWALL	Headwall
✓	SW-G_HW008	7/1/84	TYPE G HEADWALL 1 OF 2	Headwall
✓	SW-T__P001	unknown	STORMWATER PLANTER	Planter
✓	SW-T__P002	unknown	STORMWATER PLANTER	Planter
✓	SW-T__P003	unknown	STORMWATER PLANTER SECTION	Planter
✓	SW-T__P004	unknown	STORMWATER PLANTER SECTION	Planter
✓	SW-T__P005	unknown	STORMWATER BULB OUT PLAN	Planter
✓	SW-T__P006	unknown	STORMWATER BULB OUT PLAN	Planter
✓	SW-T__P007	unknown	STORMWATER BULB OUT SECTION	Planter
✓	SW-T__P008	unknown	INLET DETAILS	Planter
✓	SW-T__P009	unknown	STORM WATER PLANTER NOTES	Planter

Transportation

Done	File Name (.dgn)	Original Dat	Discription of Detail	Type
✓	TR-B_CG001	1/1/97	CONCRETE CURB AND GUTTER	Curb and Gutter
✓	TR-B_CG002	11/1/04	GRANITE CURB AT DRIVEWAY	Curb Granite
✓	TR-B_CW001	11/1/04	PIANO - KEY STYLE SPRIPED CROSSWALK	Cross Walk
✓	TR-B_DR001	11/1/04	STANDARD DRIVEWAY WITH CURB AND GUTTER	Driveway, Curb
✓	TR-B_DR002	11/1/04	ALTERNATE DRIVEWAY FOR ADA REQUIREMENTS	Driveway ADA
✓	TR-B_DR003	11/1/04	CURBS, GUTTERS AND SIDEWALKS	Curbs, Gutters
✓	TR-B_DR004	1/1/97	STANDARD WHEELCHAIR RAMP	Wheelchair
✓	TR-B_DR005	11/1/04	STANDARD DRIVEWAY DETAIL	Driveway
✓	TR-B_DR006	11/1/04	ALTERNATE DRIVEWAY APRON	Driveway
✓	TR-B_DR007	11/1/04	NARROW DRIVEWAY APRON	Driveway
✓	TR-B_GR001	1/1/97	BIKE SAFETY GRATE (ASTM A-48-74 CLASS 30)	Bike Grate
✓	TR-B_HL001	11/1/04	TYPICAL TYPE I HANDRAIL	Handrail
✓	TR-B_HR001	1/1/97	TYPE A PEDESTRIAN RAMP	Pedestrian Ramp
✓	TR-B_HR002	1/1/97	TYPE B PEDESTRIAN RAMP	Pedestrian Ramp
✓	TR-B_HR003	1/1/97	TYPE C PEDESTRIAN RAMP	Pedestrian Ramp
✓	TR-B_HR004	11/1/04	TYPE D PEDESTRIAN RAMP	Pedestrian Ramp
✓	TR-B_HR005	1/1/97	SKEWED RAMP DETAILS TYPE A AND D ONLY	Ramp
✓	TR-B_SW003	1/1/97	CONCRETE SIDEWALK AND CONRETE HEADER CURB	Sidewalk, Header Curb
✓	TR-B_SW004	1/1/97	STANDARD MONOLITHIC SIDEWALK AND CURB	Sidewalk, Curb, Monolithic
✓	TR-B_SW005	11/1/04	HEXAGONAL TILE SIDEWALK	Sidewalk
✓	TR-B_SW006	1/1/97	BRICK SIDEWALK	Sidwalk, Brick
✓	TR-B-SW007	11/1/04	STANDARD WHEELCHAIR RAMP	Wheelchair
✓	TR-B_SW008	11/1/04	STANDARD WHEELCHAIR RAMP AND SIDEWALK	Wheelchair
✓	TR-B_SW009	1/1/97	STANDARD SIDEWALK FLUME	Sidewalk Flume
✓	TR-B_SW010	11/1/04	TRUNCATED DOME DETAIL	Sidewalk - Truncated Dome
✓	TR-B_WA001	1/1/97	STANDARD MASONARY WALL	Wall
✓	TR-B_PV009	11/1/04	COMMERCIAL STREET PAVEMENT SECTION	Pavement
✓	TR-B_PV010	11/1/04	RESIDENTIAL STREET PAVEMENT SECTION	Pavement
✓	TR-G_CS001	7/1/97	TYP. CUL-DE-SAC FOR 32' R/W 28' STREET (SYMMETRICAL)	Cul-de-Sac
✓	TR-G_CS001	7/1/97	TYP. CUL-DE-SAC FOR 32' R/W 28' STREET (OFFSET)	Cul-de-Sac
✓	TR-G_CS003	2/1/69	TYP. CUL-DE-SAC FOR 50' R/W 32' STREET (SYMMETRICAL)	Cul-de-Sac
✓	TR-G_CS004	3/1/69	TYP. CUL-DE-SAC FOR 50' R/W 32' STREET (OFFSET)	Cul-de-Sac
✓	TR-G_SH001	11/1/04	SPEED HUMP	Speed Hump
✓	TR-G_SS001	11/1/04	STANDARD STREETS WITH 50' R/W SIDEWALK	R/W
✓	TR-G_SS002	1/1/97	STANDARD STREETS WITH CROWN DATA	Crown Data

Erosion Control

Done	File Name (.dgn)	Original Dat	Discription of Detail	Type
✓	ER-G_CD001	12/25/07	CHECKDAM STONE	Cd-S
✓	ER-G_CO001	12/25/07	CONSTRUCTION EXIT	Co
✓	ER-G_CW001	12/25/07	CONCRETE TRUCK WASHDOWN	Notes

✓	ER-G_DI001	12/25/07	DIVERSION	Di
✓	ER-G_DN001	12/25/07	TEMPORARY DOWNDRAIN STRUCTURE	Dn-1
✓	ER-G_FR001	12/25/07	STONE FILTER	Fr
✓	ER-G_LV001	12/25/07	LEVEL SPREADER	Lv
✓	ER-G_RD001	12/25/07	ROCKFILTER DAM	Rd
✓	ER-G_RT001	12/25/07	PERFORATED HALF ROUND PIPE WITH STONE FILTER	Rt-P
✓	ER-G_RT002	12/25/07	RETROFIT	Rt (CALCS)
✓	ER-G_SD001	12/25/07	TYPE C SILT FENCE	Sd1-C
✓	ER-G_SD002	12/25/07	CURB INLET PROTECTION	Sd2-P
✓	ER-G_SD002.1	12/25/07	CURB INLET PROTECTION	NOTES
✓	ER-G_SD003	12/25/07	BAFFLE BOX	Sd2-F
✓	ER-G_SD003.1	12/25/07	BAFFLE BOX	NOTES
✓	ER-G_SD004	12/25/07	BLOCK AND GRAVEL DROP INLET PROTECTION	Sd2-F
✓	ER-G_SD004.1	12/25/07	BLOCK AND GRAVEL DROP INLET PROTECTION	NOTES
✓	ER-G_SD005	12/25/07	FILTER FABRIC WITH SUPPORTING FRAME	Sd2-F
✓	ER-G_SD005.1	12/25/07	FILTER FABRIC WITH SUPPORTING FRAME	NOTES
✓	ER-G_SD003	12/25/07	EXCAVATED INLET SEDIMENT TRAP	Detail
✓	ER-G_SR001	12/25/07	TEMPORARY STREAM CROSSING	Sr
✓	ER-G_ST001	12/25/07	STORM DRAIN OUTLET PROTECTION	St
✓	ER-G_ST001.1	12/25/07	STORM DRAIN OUTLET PROTECTION	NOTES
✓	ER-G_SU001	12/25/07	SURFACE ROUGHENING	Su

MAIN CATEGORY
ER - EROSION CONTROL
SG - SANITARY GENERAL
SS - SANITARY SEWER
SW - STROM WATER
TR - TRANSPORTATION
WR - WATER

SUB-CATEGORY
G - GENERAL
B - BIKE PEDESTRIAN

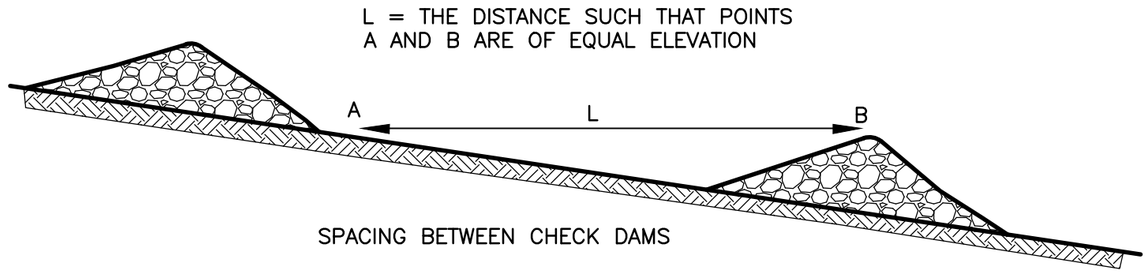

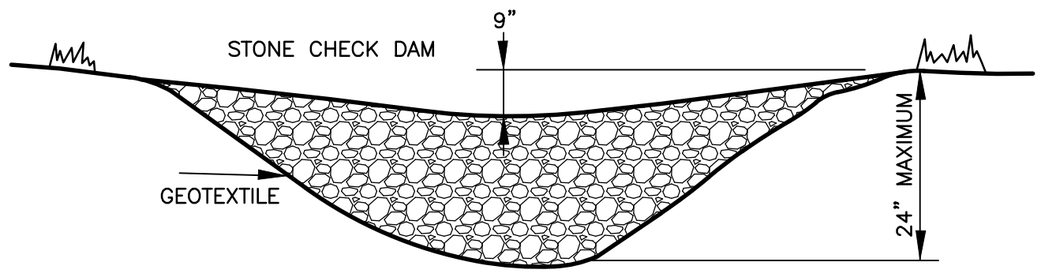

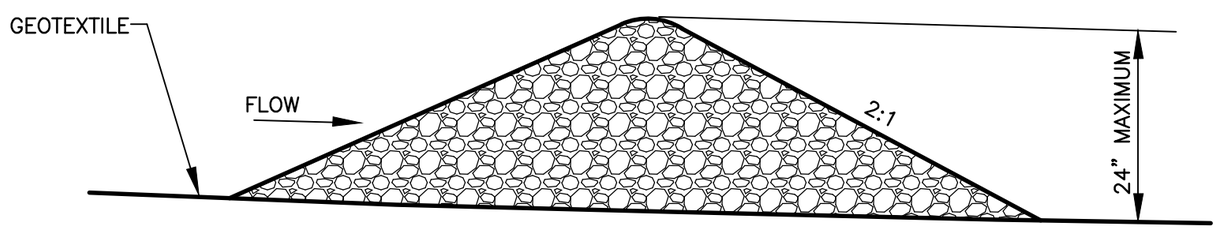

Cd–S CHECK DAM (STONE)

STONE CHECK DAMS

STONE CHECK DAMS SHOULD BE CONSTRUCTED OF GRADED SIZE 2–10" STONE. MECHANICAL OR HAND PLACEMENT SHALL BE REQUIRED TO INSURE COMPLETE COVERAGE OF ENTIRE WIDTH OF DITCH OR SWALE, AND THAT CENTER OF DAM IS LOWER THAN EDGES.

MAINTENANCE

PERIODIC INSPECTION AND REQUIRED MAINTENANCE MUST BE PROVIDED. SEDIMENT SHALL BE REMOVED WHEN IT REACHES A DEPTH OF ONE–HALF THE ORIGINAL DAM HEIGHT OR BEFORE. IF THE AREA IS TO BE MOWED, CHECK DAMS SHALL BE REMOVED ONCE FINAL STABILIZATION HAS OCCURRED. OTHERWISE, CHECK DAMS MAY REMAIN IN PLACE PERMANENTLY. AFTER REMOVAL, THE AREA BENEATH THE DAM SHALL BE SEEDED AND MULCHED IMMEDIATELY.

THIS DETAIL WAS TAKEN FROM THE CITY OF ATLANTA'S WEBSITE. IT MAY HAVE BEEN MODIFIED AND SHOULD BE REVIEWED THOROUGHLY.

City of Atlanta	STANDARD DETAILS	REV. DATE: SEPT 2011 ORIG. DATE: NOV 2004 SCALE: N.T.S.
	CHECKDAM STONE	DETAIL NO. ER–G_CD001

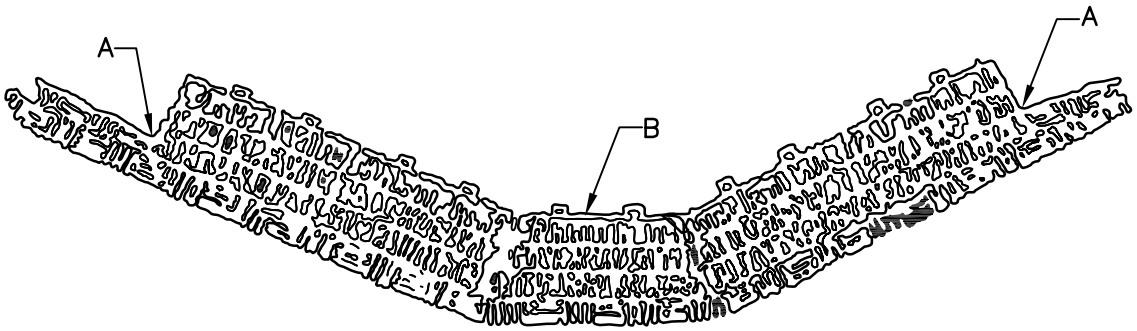

POINTS A SHOULD BE HIGHER THAN POINT B

PROPER PLACEMENT OF STRAW BALE BARRIER IN DRAINAGE WAY

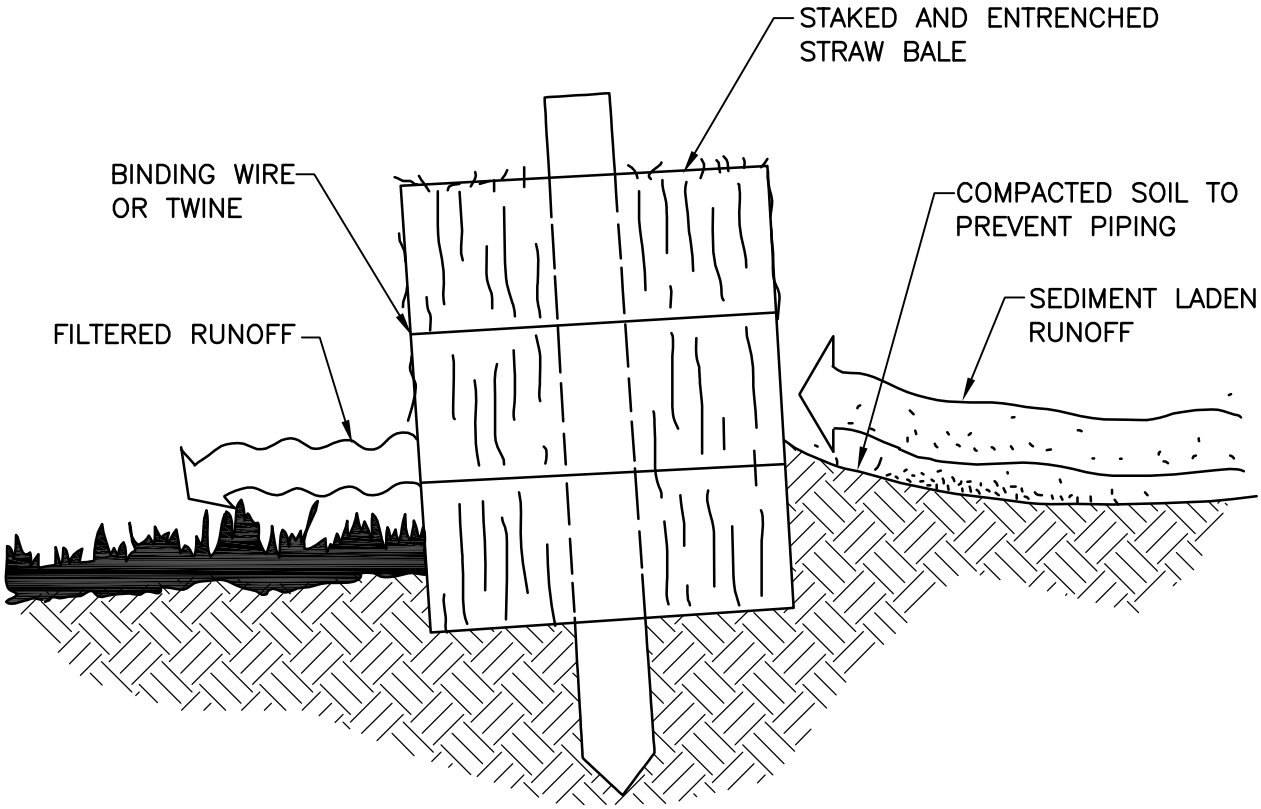

CROSS–SECTION OF A PROPERLY INSTALLED STRAW BALE

NOTE: EMBED HAY BALES A MINIMUM OF 4 INCHES.

Cd–Hb HAYBALE CHECK DAMS

THIS DETAIL WAS TAKEN FROM THE CITY OF ATLANTA'S WEBSITE. IT MAY HAVE BEEN MODIFIED AND SHOULD BE REVIEWED THOROUGHLY.

City of Atlanta	STANDARD DETAILS	REV.
		DATE: OCT. 2011
	HAYBALE CHECK DAMS	ORIG. DATE: NOV 2004
		SCALE: N.T.S.
		DETAIL NO. ER–G_CD002

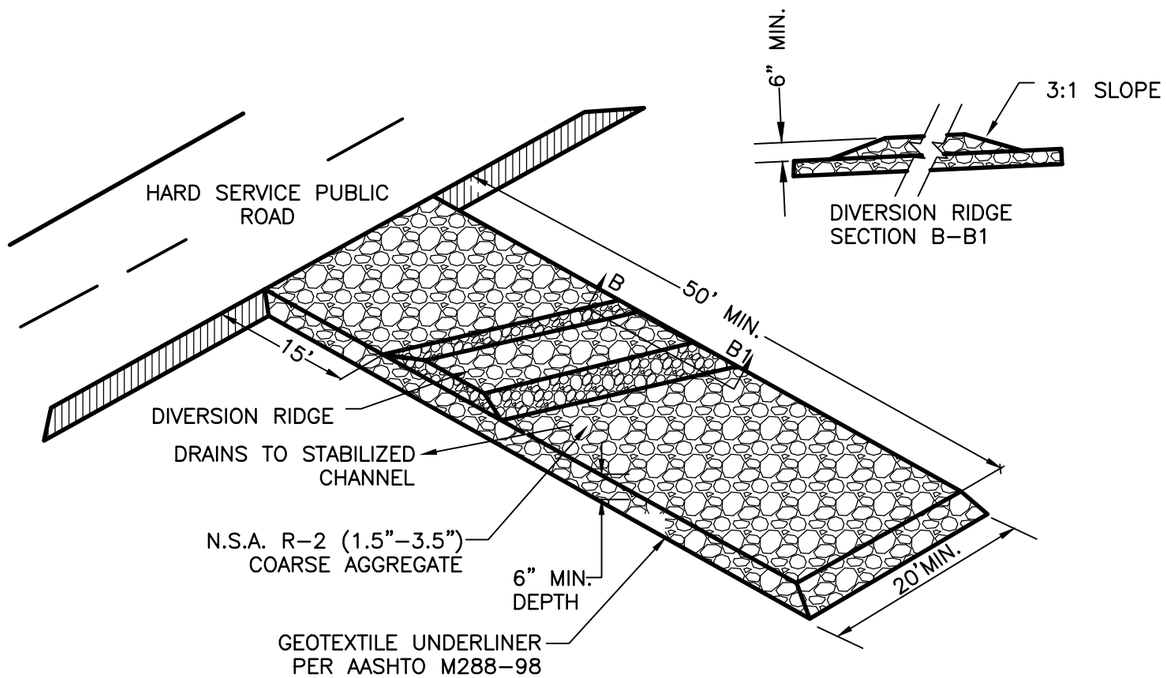

Co CONSTRUCTION EXIT

CONSTRUCTION EXIT

A STONE STABILIZED PAD SHALL BE LOCATED AT ANY POINT WHERE TRAFFIC WILL BE LEAVING A CONSTRUCTION SITE TO A PUBLIC RIGHT–OF–WAY, STREET, ALLEY, SIDEWALK, PARKING AREA, OR ANY OTHER AREA WHERE THERE IS A TRANSITION FROM BARE SOIL TO A PAVED AREA.

AGGREGATE SIZE

STONE WILL BE IN ACCORDANCE WITH NATIONAL STONE ASSOCIATION R–2 (1.5 TO 3.5 INCH STONE).

PAD THICKNESS

THE GRAVEL PAD SHALL HAVE A MINIMUM THICKNESS OF 6 INCHES.

PAD WIDTH

AT A MINIMUM, THE WIDTH SHOULD EQUAL FULL WIDTH OF ALL POINTS OF VEHICULAR EGRESS, BUT NOT LESS THAN 20 FEET WIDE.

DIVERSION RIDGE

ON SITES WHERE THE GRADE TOWARD THE PAVED AREA IS GREATER THAN 2%, A DIVERSION RIDGE 6 TO 8 INCHES HIGH WITH 3:1 SIDE SLOPES SHALL BE CONSTRUCTED ACROSS THE FOUNDATION APPROXIMATELY 15 FEET ABOVE THE ROAD.

MAINTENANCE

THE EXIT SHALL BE MAINTAINED IN A CONDITION WHICH WILL PREVENT TRACKING OR FLOW OF MUD ONTO PUBLIC RIGHTS–OF–WAY. THIS MAY REQUIRE PERIODIC TOP DRESSING WITH 1.5–3.5 INCH STONE, AS CONDITIONS DEMAND, AND REPAIR AND/OR CLEANOUT OF ANY STRUCTURES TO TRAP SEDIMENT. ALL MATERIALS SPILLED, DROPPED, WASHED, OR TRACKED FROM VEHICLES OR SITE ONTO ROADWAYS OR INTO STORM DRAINS MUST BE REMOVED IMMEDIATELY.

THIS DETAIL WAS TAKEN FROM THE CITY OF ATLANTA'S WEBSITE. IT MAY HAVE BEEN MODIFIED AND SHOULD BE REVIEWED THOROUGHLY.

City of Atlanta

STANDARD DETAILS

CONSTRUCTION EXIT

REV.
DATE: SEPT 2011
ORIG. DATE: NOV 2004
SCALE: N.T.S.

DETAIL NO. ER–G_C0001

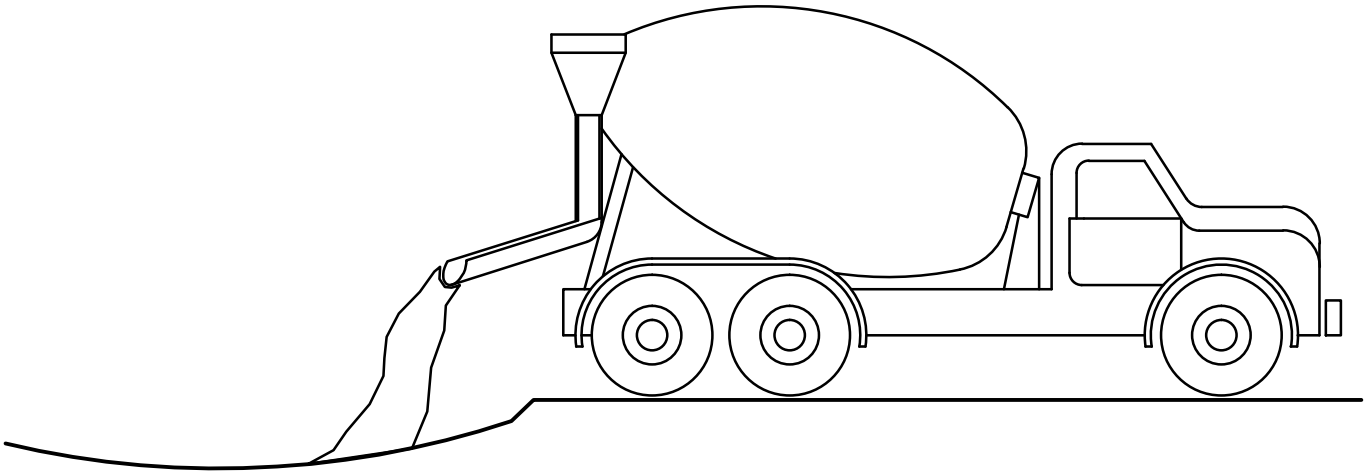

DESIGNATE WASHDOWN AREA AND EXCAVATE PIT LARGE ENOUGH TO CONTAIN WASHDOWN WATER. THIS MUST BE AWAY FROM STORM DRAINS AND WATERWAYS.

ADVISE CONCRETE TRUCK DRIVERS OF THE DESIGNATED WASH–OUT AREAS BEFORE THEY START THE JOB.

WASHDOWN CHUTE, HOPPER, AND REAR OF VEHICLE ONLY. DO NOT WASH OUT DRUM

ENSURE THAT ALL WASHDOWN WATER STAYS IN PIT.

DISPOSE OF SETTLED, HARDENED CONCRETE IN GARBAGE WITH OTHER CONSTRUCTION DEBRIS.

NEVER DISPOSE OF WASHDOWN WATER IN STREETS, STORM DRAINS, OR STREAMS.

CONCRETE TRUCK WASHDOWN

THIS DETAIL WAS TAKEN FROM THE CITY OF ATLANTA'S WEBSITE. IT MAY HAVE BEEN MODIFIED AND SHOULD BE REVIEWED THOROUGHLY.

City of Atlanta	STANDARD DETAILS	REV. DATE: OCT. 2011 ORIG. DATE: NOV 2004 SCALE: N.T.S.
	CONCRETE TRUCK WASHDOWN	DETAIL NO. ER–G_CW001

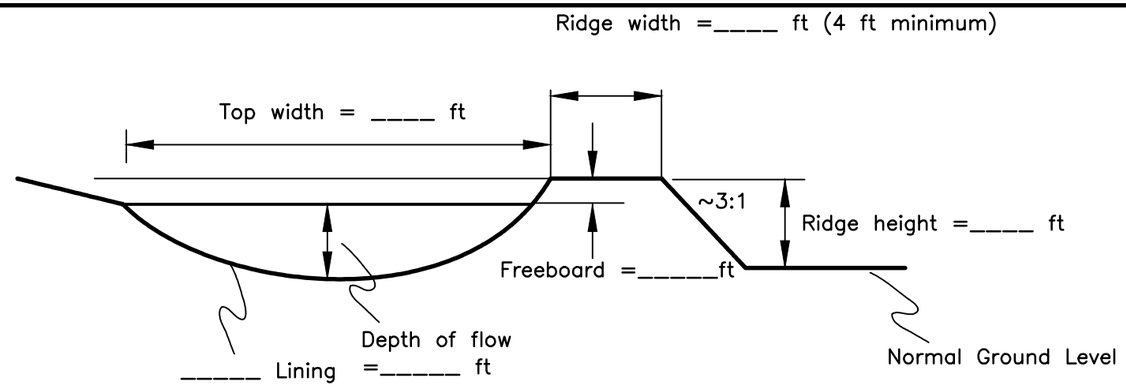

TO BE SHOWN ON THE EROSION AND SEDIMENT CONTROL PLAN
Complete the appropriate detail drawing for the channel cross–section of choice:

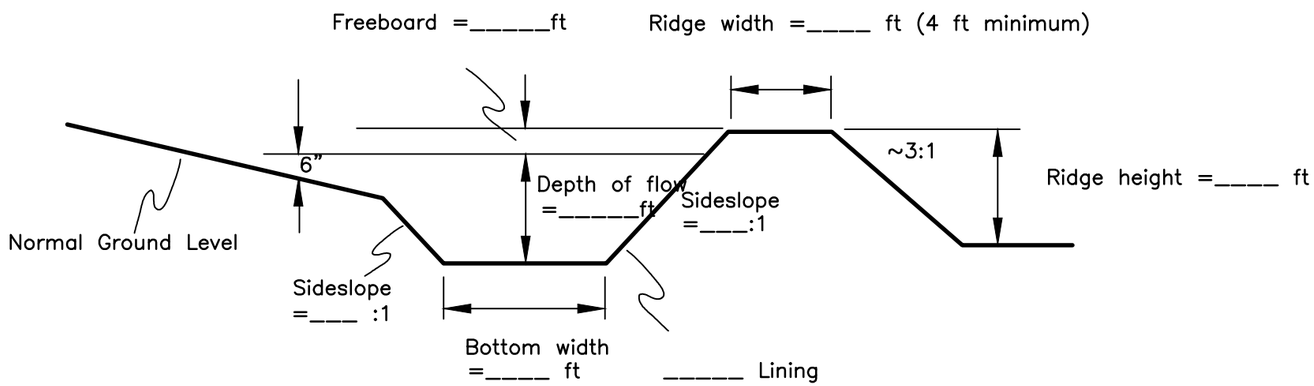

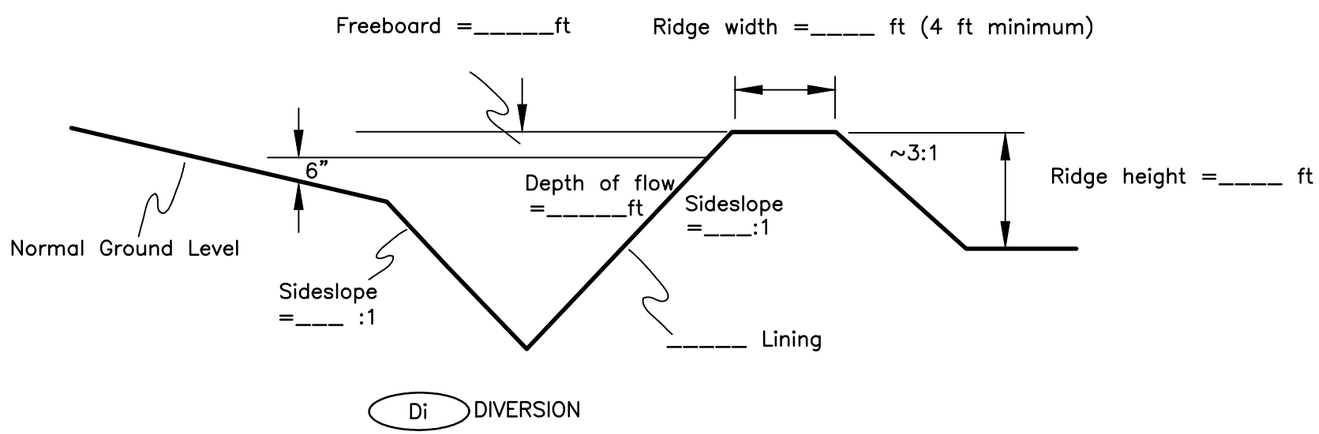

Di DIVERSION

THIS DETAIL WAS TAKEN FROM THE CITY OF ATLANTA'S WEBSITE. IT MAY HAVE BEEN MODIFIED AND SHOULD BE REVIEWED THOROUGHLY.

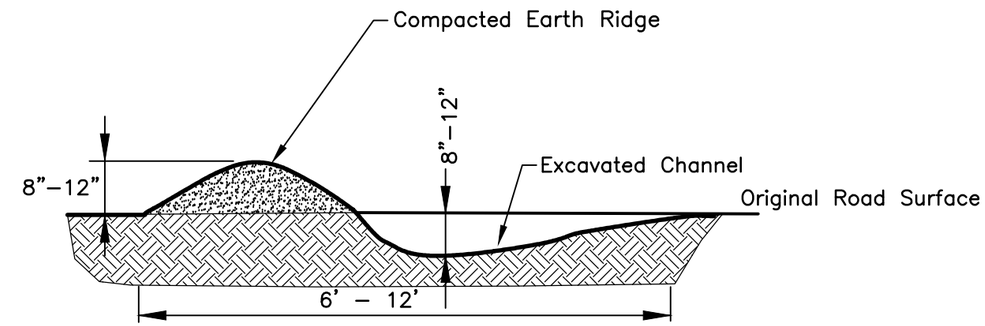

TYPICAL DIVERSION ACROSS ROAD

STABLE OUTLETS SHALL BE PROVIDED FOR EACH DIVERSION.

DIVERSION

CONSTRUCTION SPECIFICATIONS

1. ALL TREES, BRUSH, STUMPS, OBSTRUCTIONS, AND OTHER OBJECTIONABLE MATERIAL SHALL BE REMOVED AND DISPOSED OF SO AS NOT TO INTERFERE WITH THE PROPER FUNCTIONING OF THE DIVERSION.
2. THE DIVERSION SHALL BE EXCAVATED OR SHAPED TO LINE, GRADE, AND CROSS SECTION AS REQUIRED TO MEET THE CRITERIA SPECIFIED HEREIN AND FREE OF IRREGULARITIES WHICH WILL IMPEDE NORMAL FLOW.
3. ALL FILLS SHALL BE MACHINE COMPACTED AS NEEDED TO PREVENT UNEQUAL SETTLEMENT THAT WOULD CAUSE DAMAGE IN THE COMPLETED DIVERSION.
4. ALL EARTH REMOVED AND NOT NEEDED IN CONSTRUCTION SHALL BE SPREAD OR DISPOSED OF SO THAT IT WILL NOT INTERFERE WITH THE FUNCTIONING OF THE DIVERSION.
5. DIVERSION CHANNEL SHALL BE STABILIZED IN ACCORDANCE WITH SPECIFICATION CH – CHANNEL STABILIZATION.

City of Atlanta

STANDARD DETAILS	REV. DATE: SEPT 2011 ORIG. DATE: NOV 2004 SCALE: N.T.S.
DIVERSION	DETAIL NO. ER–G_DI001

MAXIMUM DRAINAGE AREA PER PIPE (ACRE)	PIPE DIAMETER (INCHES)
.3	10.
.5	12
1.0	18

TABLE
6–14.1

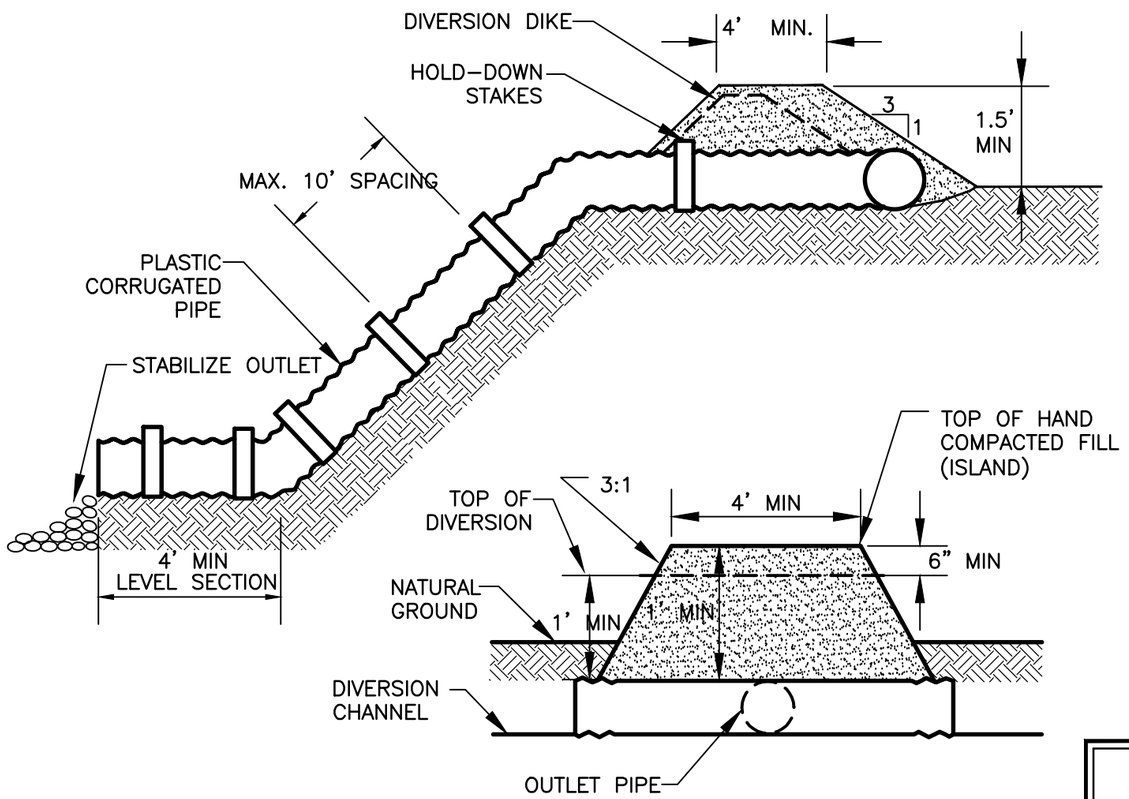

Dn–1 TEMPORARY DOWNDRAIN STRUCTURE

THIS DETAIL WAS TAKEN FROM THE CITY OF ATLANTA'S WEBSITE. IT MAY HAVE BEEN MODIFIED AND SHOULD BE REVIEWED THOROUGHLY.

TEMPORARY DOWNDRAIN

CONDUIT MATERIAL SHALL BE HEAVY DUTY FLEXIBLE MATERIAL SUCH AS NON–PERFORATED CORRUGATED PLASTIC TUBING OR SPECIALLY DESIGNED FLEXIBLE TUBING. USE REINFORCED, HOLD–DOWN GROMMETS OR STAKES TO ANCHOR THE PIPE AT INTERVALS NOT TO EXCEED 10 FEET WITH THE OUTLET END SECURELY FASTENED IN PLACE. THE PIPE MUST EXTEND BEYOND THE TOE OF THE SLOPE.

CONSTRUCTION SPECIFICATIONS

1. PLACE SLOPE DRAINS ON UNDISTURBED SOIL OR WELL COMPACTED FILL AT LOCATIONS AND ELEVATIONS SHOWN ON THE PLAN.
2. SLIGHTLY SLOPE THE SECTION OF PIPE UNDER THE DIKE TOWARD ITS OUTLET.
3. HAND TAMP THE SOIL UNDER AND AROUND THE ENTRANCE SECTION IN LIFTS NOT TO EXCEED 6 INCHES.
4. ENSURE THAT FILL OVER THE DRAIN AT THE TOP OF THE SLOPE HAS MINIMUM DIMENSIONS OF 1.5 FT. DEPTH, 4 FT. TOP WIDTH, AND 3:1 SIDE SLOPES.
5. ENSURE THAT ALL SLOPE DRAIN CONNECTIONS ARE WATERTIGHT.
6. ENSURE THAT ALL FILL MATERIAL IS WELL–COMPACTED. SECURELY FASTEN THE EXPOSED SECTION OF THE DRAIN WITH GROMMETS OR STAKES SPACED NO MORE THAN 10 FEET APART.
7. PLACE THE DRAIN SLIGHTLY DIAGONALLY ACROSS THE SLOPE, EXTENDING THE DRAIN BEYOND THE TOE OF THE SLOPE. CURVE THE OUTLET UPHILL AND ADEQUATELY PROTECT THE OUTLET FROM EROSION.
8. IF THE DRAIN IS CONVEYING SEDIMENT–LADEN RUNOFF, DIRECT ALL FLOWS INTO A SEDIMENT TRAP OR SEDIMENT BASIN.
9. MAKE THE SETTLED, COMPACTED DIKE RIDGE NO LESS THAN ONE FOOT ABOVE THE TOP OF THE PIPE AT EVERY POINT.
10. IMMEDIATELY STABILIZE ALL DISTURBED AREAS FOLLOWING CONSTRUCTION.

MAINTENANCE

INSPECT THE SLOPE DRAIN AND SUPPORTING DIVERSION AFTER EVERY RAINFALL AND PROMPTLY MAKE NECESSARY REPAIRS. WHEN THE PROTECTED AREA HAS BEEN PERMANENTLY STABILIZED AND THE PERMANENT STORMWATER DISPOSAL SYSTEM IS FULLY FUNCTIONAL, TEMPORARY MEASURES MAY BE REMOVED, MATERIAL DISPOSED OF PROPERLY, AND ALL DISTURBED AREAS STABILIZED APPROPRIATELY.

TO BE SHOWN ON THE EROSION AND SEDIMENT CONTROL PLAN

1. THE DRAINAGE AREA FOR EACH DOWNDRAIN, IN ACRES.
2. THE DIAMETER OF EACH DOWNDRAIN, IN INCHES, BASED ON TABLE 6–14.1.
3. THE DIMENSIONS OF THE OUTLET PROTECTION, INCLUDING FLOW RATE, VELOCITY, AND APRON LENGTH, UPSTREAM AND DOWNSTREAM WIDTHS, AVERAGE STONE DIAMETER AND DEPTH.

City of Atlanta

STANDARD DETAILS

TEMPORARY DOWNDRAIN STRUCTURE

REV.
DATE: SEPT 2011
ORIG. DATE: NOV 2004
SCALE: N.T.S.

DETAIL NO. ER–G_DN001

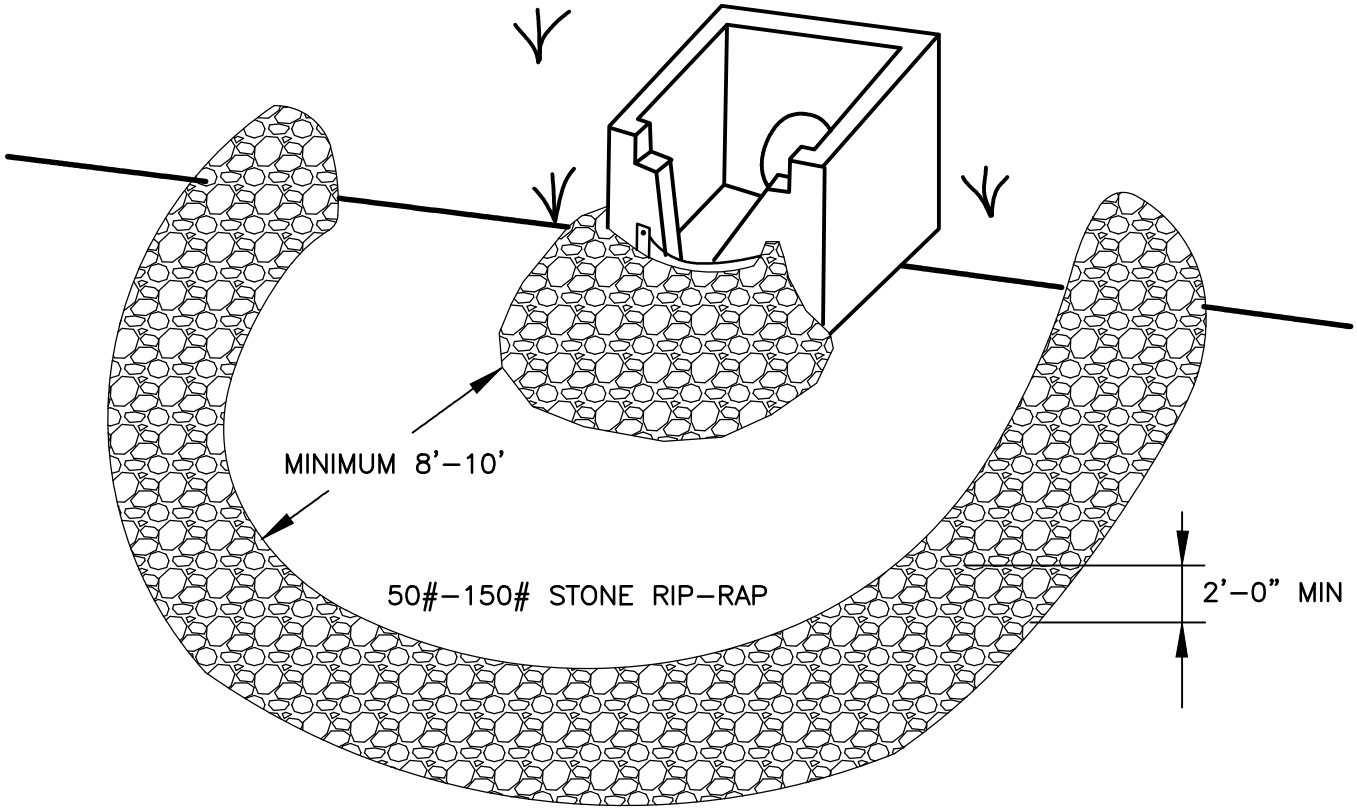

FILTER RING

FILTER RINGS SHOULD BE USED IN CONJUNCTION WITH OTHER SEDIMENT CONTROL MEASURES TO PROVIDE ADDITIONAL SEDIMENT FILTERING CAPACITY.
FILTER RINGS SHOULD BE CONSTRUCTED OF STONE NO SMALLER THAN 3"–5" WHEN USED AT INLETS LESS THAN 12" IN DIAMETER, AND OF STONE NO LESS THAN 10"–15" WHEN USED AT LARGER INLETS.

MAINTENANCE

THE FILTER RING MUST BE KEPT CLEAR OF TRASH AND DEBRIS. THIS WILL REQUIRE CONTINUOUS MONITORING AND MAINTENANCE, WHICH INCLUDES SEDIMENT REMOVAL WHEN ONE–HALF FULL. STRUCTURES ARE TEMPORARY AND SHOULD BE REMOVED WHEN THE LAND–DISTURBING PROJECT HAS BEEN STABILIZED.

Fr STONE FILTER

THIS DETAIL WAS TAKEN FROM THE CITY OF ATLANTA'S WEBSITE. IT MAY HAVE BEEN MODIFIED AND SHOULD BE REVIEWED THOROUGHLY.

City of Atlanta	STANDARD DETAILS	REV. DATE: OCT. 2011 ORIG. DATE: NOV 2004 SCALE: N.T.S.
	STONE FILTER	DETAIL NO. ER–G_FR001

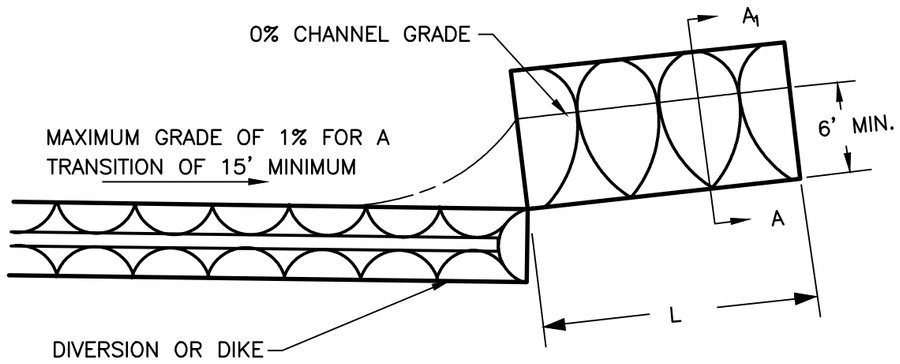

PLAN

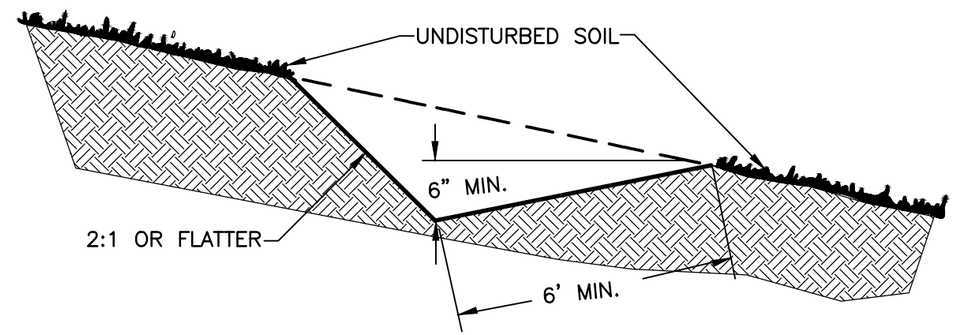

SECTION A–A1

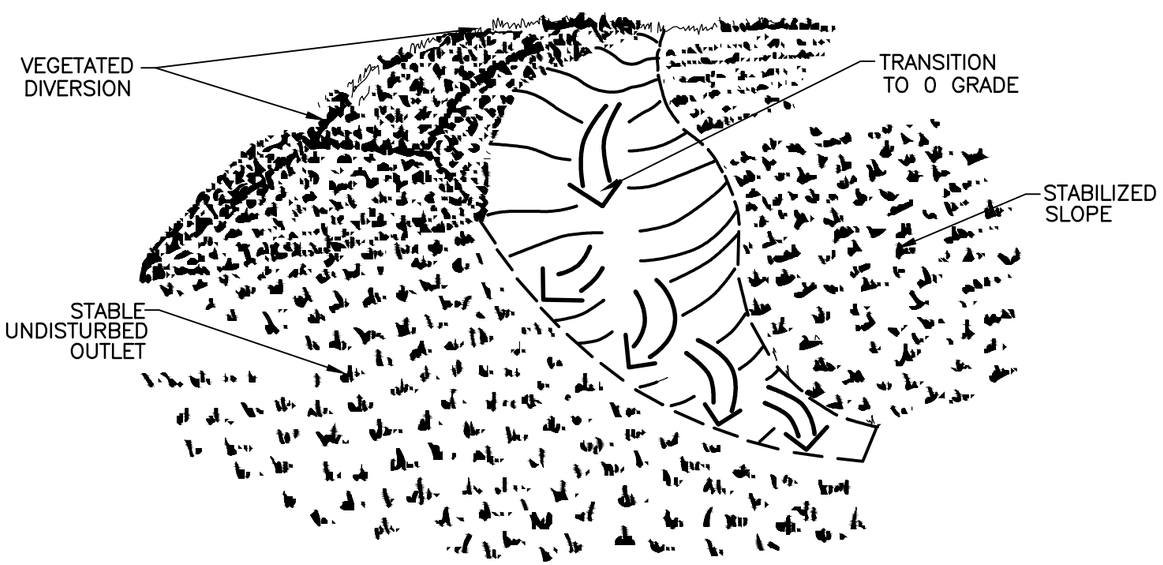

ISOMETRIC VIEW – (NTS)

Lv LEVEL SPREADER

THIS DETAIL WAS TAKEN FROM THE CITY OF ATLANTA'S WEBSITE. IT MAY HAVE BEEN MODIFIED AND SHOULD BE REVIEWED THOROUGHLY.

LEVEL SPREADER

THE MINIMUM ACCEPTABLE WIDTH SHALL BE 6 FEET. THE DEPTH OF THE LEVEL SPREADER AS MEASURED FROM THE LIP SHALL BE AT LEAST 6 INCHES AND THE DEPTH SHALL BE UNIFORM ACROSS THE ENTIRE LENGTH OF THE MEASURE.

THE GRADE OF THE CHANNEL FOR THE LAST 15 FEET OF THEDIKE OR DIVERSION ENTERING THE LEVEL SPREADER SHALL BE LESS THAN OR EQUAL TO 1%. THE LEVEL LIP SHALL BE CONSTRUCTED ON ZERO PERCENT GRADE TO INSURE UNIFORM SPREADING OF STORM RUNOFF (CONVERTING CHANNEL FLOW TO SHEET FLOW).

LEVEL SPREADERS MUST BE CONSTRUCTED ON UNDISTURBED SOIL (NOT ON FILL).

THE ENTRANCE TO SPREADER SHALL BE GRADED IN A MANNER TO INSURE THAT RUNOFF ENTERS DIRECTLY ONTO THE ZERO PERCENT GRADED CHANNEL.
STORM RUNOFF CONVERTED TO SHEET FLOW MUST DISCHARGEONTO UNDISTURBED STABILIZED AREAS.
ALL DISTURBED AREAS SHALL BE VEGETATED IMMEDIATELY AFTER CONSTRUCTION IS COMPLETED.
REFER TO SPECIFICATIONS DS3 AND DS4 – DISTURBED AREA STABILIZATION (WITHPERMANENT VEGETATION AND SODDING), RESPECTIVELY AND MB – MATTING AND BLANKETS.

MAINTENANCE:

Periodic inspection and maintenance must be provided.

City of Atlanta	STANDARD DETAILS	REV. DATE: SEPT 2011 ORIG. DATE: NOV 2004 SCALE: N.T.S.
	LEVEL SPREADER	DETAIL NO. ER–G_LV001

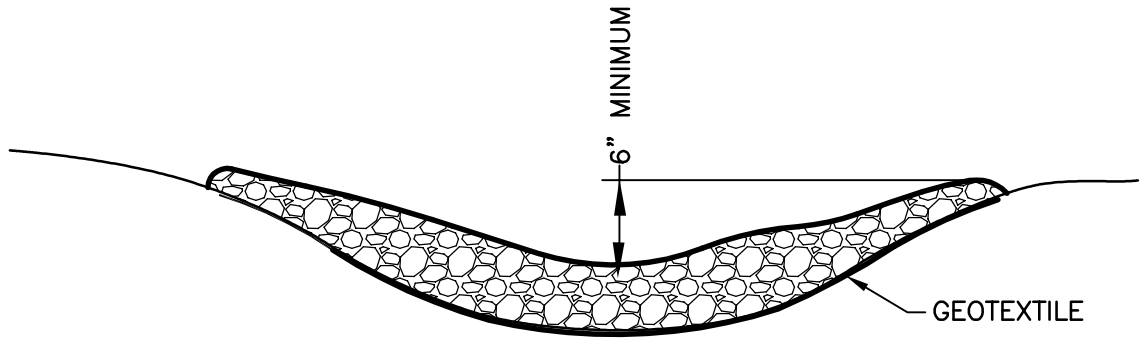

NOTE: SEDIMENT TRAP IS TO BE CLEANED OUT WHEN VOLUME BECOMES HALF FULL.

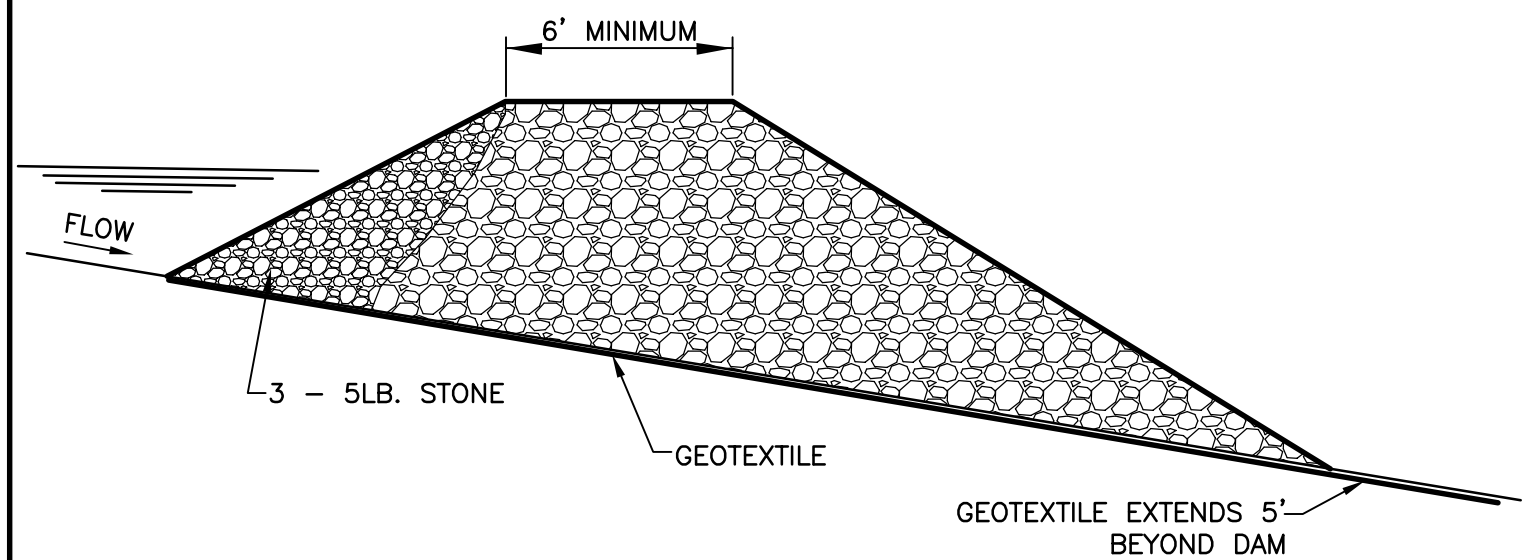

NOTE:
ROCK SIZE DETERMINED ACCORDING TO SPECIFICATIONS SET FORTH IN APPENDIX C OF THE GREEN BOOK.

Rd ROCK FILTER DAM

ROCK FILTER DAM

DESIGN STANDARDS:

DRAINAGE AREA
THE DRAINAGE AREA TO THE DAM SHALL NOT EXCEED 50 ACRES.

HEIGHT
THE DAM SHOULD NOT BE HIGHER THAN THE CHANNEL BANKS OR EXCEED THE ELEVATION OF THE UPSTREAM PROPERTY LINE. THE CENTER OF THE ROCK DAM SHOULD BE AT LEAST SIX INCHES LOWER THAN THE OUTER EDGES OF THE DAM AT THE CHANNEL BANKS.

SIDE SLOPES
THE SIDE SLOPES SHALL BE 2:1 OR FLATTER.

LOCATION
THE DAM SHALL BE LOCATED AS CLOSE TO THE SOURCE OF SEDIMENT AS POSSIBLE AND SO THAT IT WILL NOT CAUSE WATER TO BACK UP ON UPSTREAM ADJACENT PROPERTY.
STONE SIZE: THE STONE SIZE SHALL BE DETERMINED BY THE RIPRAP SIZING CRITERIA IN APPENDIX C OF THE MANUAL FOR EROSION AND SEDIMENT CONTROL IN GEORGIA. THE ROCK DAM CAN BE FACED WITH SMALLER STONE ON THE UPSTREAM SIDE FOR ADDITIONAL FILTERING EFFECT. HOWEVER, THIS MAY MAKE THE DAM MORE PRONE TO CLOGGING.

TOP WIDTH
THE WIDTH ACROSS THE TOP OF THE DAM SHOULD BE NO LESS THAN 6 FEET.

GEOTEXTILE
GEOTEXTILES SHOULD BE USED AS A SEPARATOR BETWEEN THE GRADED STONE, THE SOIL BASE, AND THE ABUTMENTS. THE GEOTEXTILE WILL PREVENT THE MIGRATION OF SOIL PARTICLES FROM THE SUBGRADE INTO THE GRADED STONE. THE GEOTEXTILE SHALL BE SPECIFIED IN ACCORDANCE WITH AASHTO M288–96 SECTION 7.5, PERMANENT EROSION CONTROL RECOMMENDATIONS. THE GEOTEXTILE SHOULD BE PLACED IMMEDIATELY ADJACENT TO THE SUBGRADE WITHOUT ANY VOIDS AND EXTEND FIVE FEET BEYOND THE DOWNSTREAM TOE OF THE DAM TO PREVENT SCOUR.

MAINTENANCE
ROCK DAMS SHOULD BE REMOVED ONCE DISTURBED AREAS HAVE BEEN STABILIZED. PERIODIC INSPECTION AND REQUIRED MAINTENANCE MUST BE PROVIDED. SEDIMENT SHALL BE REMOVED WHEN IT REACHES A DEPTH OF ONE–HALF OF THE ORIGINAL HEIGHT OF THE DAM.

TO BE SHOWN ON THE EROSION AND SEDIMENT CONTROL PLAN
1. FIGURE 6–18.1, NOTING ROCK SIZE AS SPECIFIED IN APPENDIX C.

THIS DETAIL WAS TAKEN FROM THE CITY OF ATLANTA'S WEBSITE. IT MAY HAVE BEEN MODIFIED AND SHOULD BE REVIEWED THOROUGHLY.

City of Atlanta

STANDARD DETAILS

ROCK FILTER DAM

REV.
DATE: SEPT 2011
ORIG. DATE: NOV 2004
SCALE: N.T.S.

DETAIL NO. ER–G_RD001

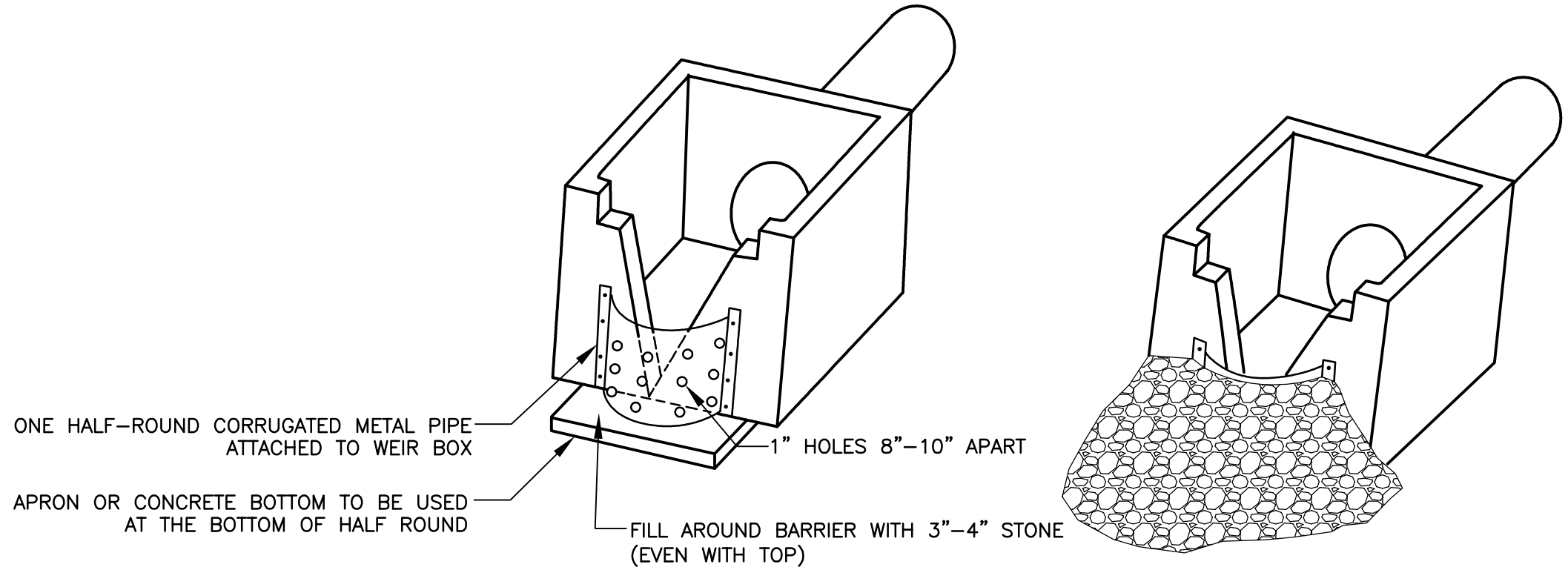

ISOMETRICS

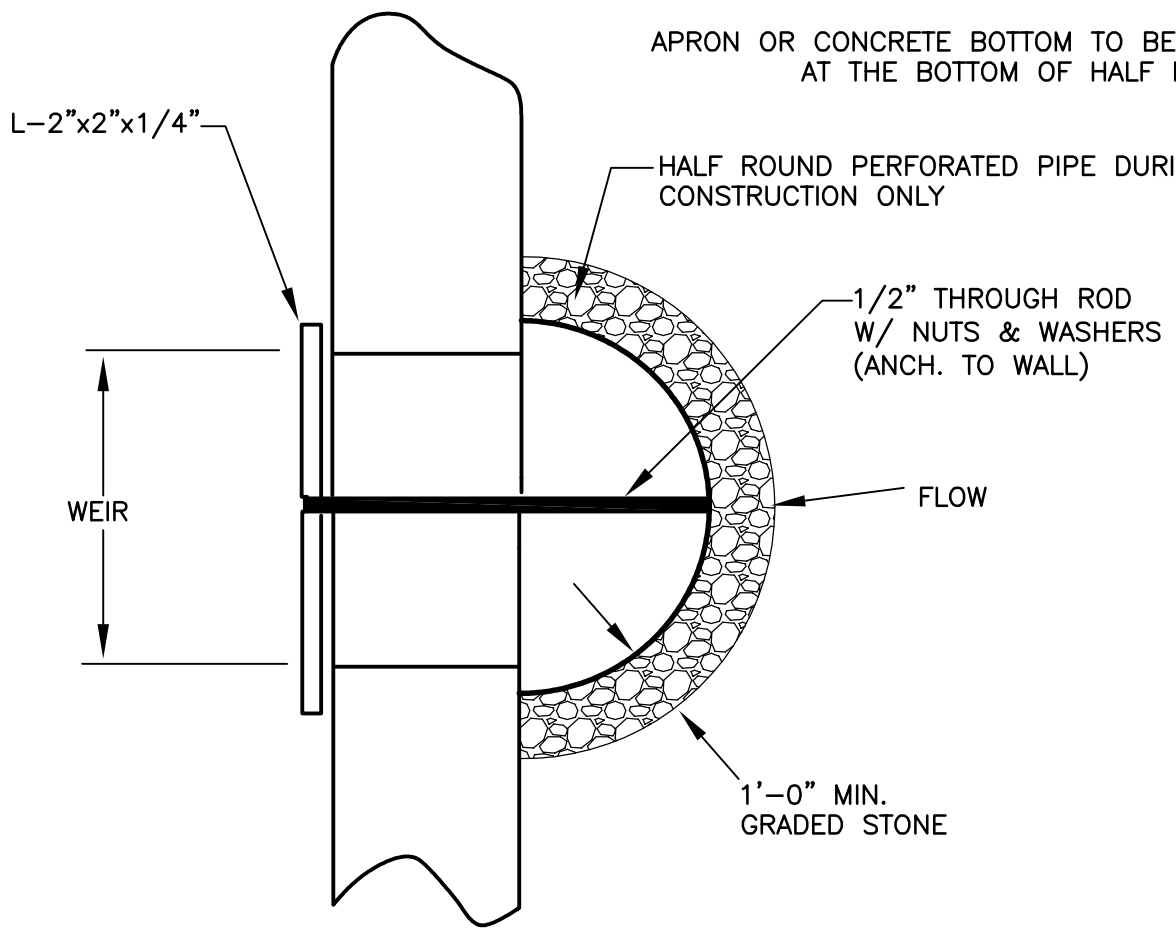

PLAN

Rt–P PERFORATED HALF ROUND PIPE WITH STONE FILTER

THE FOLLOWING TYPES OF STRUCTURES ARE ACCEPTABLE UNDER THE DESIGNATED CONDITIONS:

PERFORATED HALF–ROUND PIPE WITH STONE FILTER: Rt–P

A. SHOULD BE USED ONLY IN DETENTION PONDS WITH LESS THAN 30 ACRE TOTAL DRAINAGE AREA.
B. NEVER TO BE USED ON EXPOSED PIPE END OR WINGED HEADWALL.
C. DIAMETER OF HALF–ROUND PIPE SHOULD BE 1.5 TIME THE DIAMETER OF THE PRINCIPAL PIPE OUTLET OR WIDER THAN THE GREATEST WIDTH OF THE CONCRETE WEIR.
D. PERFORATIONS AND STONE SIZES ARE SHOWN IN DETAIL
E. SHALL BE FIXED BY SPECIFIED MEANS (BOLTS, ETC) TO CONCRETE OUTLET STRUCTURE.

SLOTTED BOARD DAM WITH STONE: Rt–B

A. CAN BE USED IN DETENTION PONDS WITH DRAINAGE AREAS UP TO 100 ACRES.
B. CAN BE USED WITH OPEN END PIPE OUTLETS, WINGED HEADWALLS, OR CONCRETE WEIR OUTLETS.
C. SHOULD BE INSTALLED WITH MINIMUM SIZE 4X4 INCH POSTS.
D. BOARDS SHOULD HAVE 0.5–1.0 INCH SPACE BETWEEN THEM.

MAINTENANCE

RETROFIT STRUCTURES SHALL BE KEPT CLEAR OF TRASH AND DEBRIS. THIS WILL REQUIRE CONTINUOUS MONITORING AND MAINTENANCE, WHICH INCLUDES SEDIMENT REMOVAL WHEN ONETHIRD OF THE SEDIMENT STORAGE CAPACITY HAS BEEN LOST.
STRUCTURES ARE TEMPORARY AND SHALL BE REMOVED WHEN DISTURBED AREAS HAVE BEEN PERMANENTLY STABILIZED.

THIS DETAIL WAS TAKEN FROM THE CITY OF ATLANTA'S WEBSITE. IT MAY HAVE BEEN MODIFIED AND SHOULD BE REVIEWED THOROUGHLY.

City of Atlanta

STANDARD DETAILS

RETROFIT INLET SEDIMENT TRAP

REV.
DATE: SEPT 2011
ORIG. DATE: NOV 2004
SCALE: N.T.S.

DETAIL NO. ER–G_RT001

TO BE SHOWN ON THE EROSION AND SEDIMENT CONTROL PLAN

STORAGE CALCULATIONS
1. REQUIRED STORMWATER STORAGE = _____ CY
(AS DETERMINED BY LOCAL ORDINANCE)
2. REQUIRED SEDIMENT STORAGE = _____ CY
(67 CY/AC * _____ AC DISTURBED AREA)
3. TOTAL REQUIRED STORAGE = _(1)_ + _(2)_ = _(3)_ CY
4. AVAILABLE STORAGE = _(4)_ CY
5. IS THE AVAILABLE STORAGE (4) GREATER THAN THE TOTAL REQUIRED STORAGE (3)?
_____ YES _____ NO
6. IF "NO", THE SEDIMENT STORAGE CAPACITY OF THE POND MUST BE INCREASED.
CHOOSE THE METHOD TO BE USED:
_____ RAISE THE INVERT OF THE OUTLET STRUCTURE _____ INCHES
_____ UNDERCUT THE POND _____ FEET
_____ OTHER _____
7. CLEAN-OUT ELEVATION =_____FT
(ELEVATION CORRESPONDING TO 22 CY/AC *_____AC DISTURBED AREA)
8. IS THE LENGTH-WIDTH RATIO 2:1 OR GREATER?
_____ YES _____ NO
9. IF "NO", THE LENGTH OF FLOW MUST BE INCREASED. CHOOSE THE METHOD TO BE USED:
_____ BAFFLES (TYPE OF BAFFLE: _____)
_____ OTHER _____
NOTE THE CMP DIAMETER AND HEIGHT IF A HALF-ROUND CMP RETROFIT IS TO BE USED.
DIAMETER =_____INCHES HEIGHT =_____FEET

Rt RETROFIT

THIS DETAIL WAS TAKEN FROM THE CITY OF ATLANTA'S WEBSITE. IT MAY HAVE BEEN MODIFIED AND SHOULD BE REVIEWED THOROUGHLY.

City of Atlanta	STANDARD DETAILS	REV.
		DATE: OCT. 2011
	RETROFIT	ORIG. DATE: NOV 2004
		SCALE: N.T.S.
		DETAIL NO. ER-G_RT002

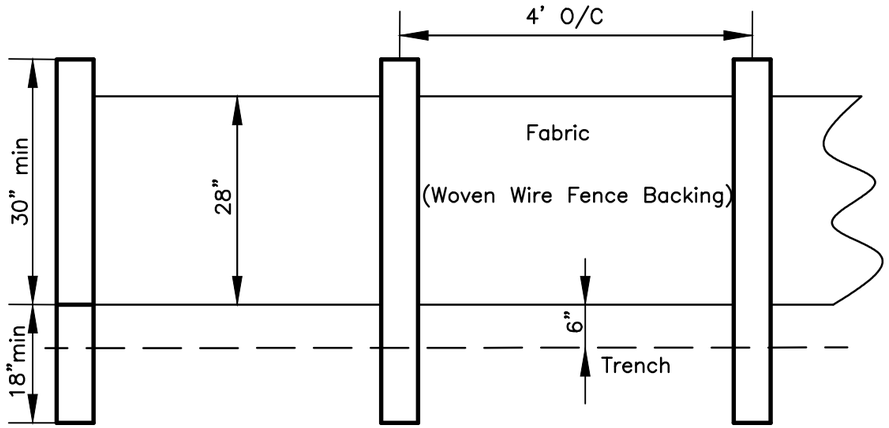

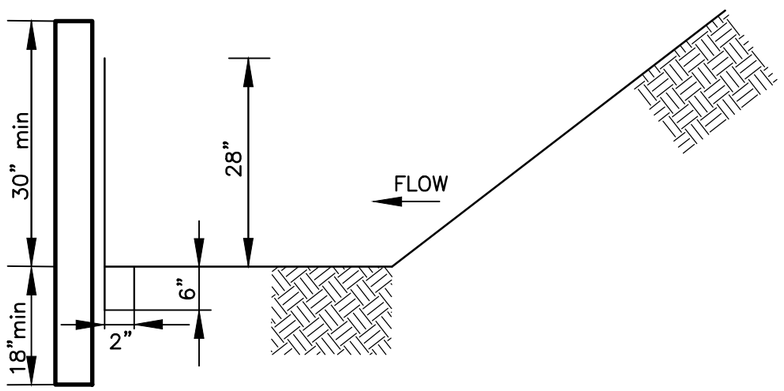

Sd1–C TYPE C SILT FENCE

MAINTENANCE
SEDIMENT SHALL BE REMOVED ONCE IT HAS ACCUMULATED TO ONE–HALF THE ORIGINAL HEIGHT OF THE BARRIER. FILTER FABRIC SHALL BE REPLACED WHENEVER IT HAS DETERIORATED TO SUCH AN EXTENT THAT THE EFFECTIVENESS OF THE FABRIC IS REDUCED (APPROXIMATELY SIX MONTHS). TEMPORARY SEDIMENT BARRIERS SHALL REMAIN IN PLACE UNTIL DISTURBED AREAS HAVE BEEN PERMANENTLY STABILIZED. ALL SEDIMENT ACCUMULATED AT THE BARRIER SHALL BE REMOVED AND PROPERLY DISPOSED OF BEFORE THE BARRIER IS REMOVED.

THIS DETAIL WAS TAKEN FROM THE CITY OF ATLANTA'S WEBSITE. IT MAY HAVE BEEN MODIFIED AND SHOULD BE REVIEWED THOROUGHLY.

SILT FENCE

THE MANUFACTURER SHALL HAVE EITHER AN APPROVED COLOR MARK YARN IN THE FABRIC OR LABEL THE FABRICATED SILT FENCE WITH BOTH THE MANUFACTURER AND FABRIC NAME EVERY 100 FEET.

THE TEMPORARY SILT FENCE SHALL BE INSTALLED ACCORDING TO THIS SPECIFICATION, AS SHOWN ON THE PLANS OR AS DIRECTED BY THE ENGINEER. FOR INSTALLATION OF THE FABRIC, SEE DETAIL.
POST INSTALLATION SHALL START AT THE CENTER OF THE LOW POINT (IF PPLICABLE) WITH THE REMAINING POSTS SPACED 4 FEET APART FOR TYPE C SILT FENCE. ONLY STEEL POST SHALL BE USED WITH TYPE C SILT FENCE. POSTS SHALL BE 4' IN LENGTH, 1.3 LBS/ FT.
ALONG STREAM BUFFERS AND OTHER SENSITIVE AREAS, TWO ROWS OF TYPE C SILT FENCE OR ONE ROW OF TYPE C SILT FENCE BACKED BY HAYBALES SHALL BE USED.

MAINTENANCE FOR ALL Sd2 APPLICATIONS

ALL TRAPS SHALL BE INSPECTED DAILY AND AFTER EACH RAIN AND REPAIRS MADE AS NEEDED.
SEDIMENT SHALL BE REMOVED WHEN THE SEDIMENT HAS ACCUMULATED TO ONE–HALF THE HEIGHT OF THE TRAP. SEDIMENT SHALL BE REMOVED FROM CURB INLET PROTECTION IMMEDIATELY. FOR EXCAVATED INLET SEDIMENT TRAPS, SEDIMENT SHALL BE REMOVED WHEN ONE–HALF OF THE SEDIMENT STORAGE CAPACITY HAS BEEN LOST TO SEDIMENT ACCUMULATION. SOD INLET PROTECTION SHAL BE MAINTAINED AS SPECIFIED IN DS4– DISTURBED AREA STABLIZATION (WITH SODDING).

SEDIMENT SHALL NOT BE WASHED INTO THE INLET. IT SHALL BE REMOVED FROM THE SEDIMENT TRAP AND DISPOSED OF AND STABILIZED SO THAT IT WILL NOT ENTER THE INLET, AGAIN.
WHEN THE CONTRIBUTING DRAINAGE AREA HAS BEEN PERMANENTLY STABILIZED, ALL MATERIALS AND ANY SEDIMENT SHALL BE REMOVED, AND EITHER SALVAGED OR DISPOSED OF PROPERLY. THE DISTURBED AREA SHALL BE BROUGHT TO PROPER GRADE, THEN SMOOTHED AND COMPACTED. ALL DISTURBED AREAS AROUND THE INLET SHALL BE APPROPRIATELY STABILIZED.

DESIGN CRITERIA FOR ALL Sd2 APPLICATIONS

MANY SEDIMENT FILTERING DEVICES CAN BE DESIGNED TO SERVE AS TEMPORARY SEDIMENT TRAPS. SEDIMENT TRAPS MUST BE SELF–DRAINING UNLESS THEY ARE OTHERWISE PROTECTED IN AN APPROVED FASHION THAT WILL NOT PRESENT A SAFETY HAZARD. **THE** AREA DRAINING TO THE INLET SEDIMENT TRAP SHALL BE NO GREATER THAN ONE ACRE.

IF RUNOFF MAY BYPASS THE PROTECTED INLET, A TEMPORARY DIKE SHOULD BE CONSTRUCTED ON THE DOWN SLOPE SIDE OF THE STRUCTURE. ALSO, A STONE FILTER RING MAY BE USED ON THE UP SLOPE SIDE OF THE INLET TO SLOW RUNOFF AND FILTER LARGER SOIL PARTICLES. REFER TO FR–STONE FILTER RING.

City of Atlanta

STANDARD DETAILS

TYPE C
SILT FENCE

REV.
DATE: SEPT 2011
ORIG. DATE: NOV 2004
SCALE: N.T.S.

DETAIL NO. ER–G_SD001

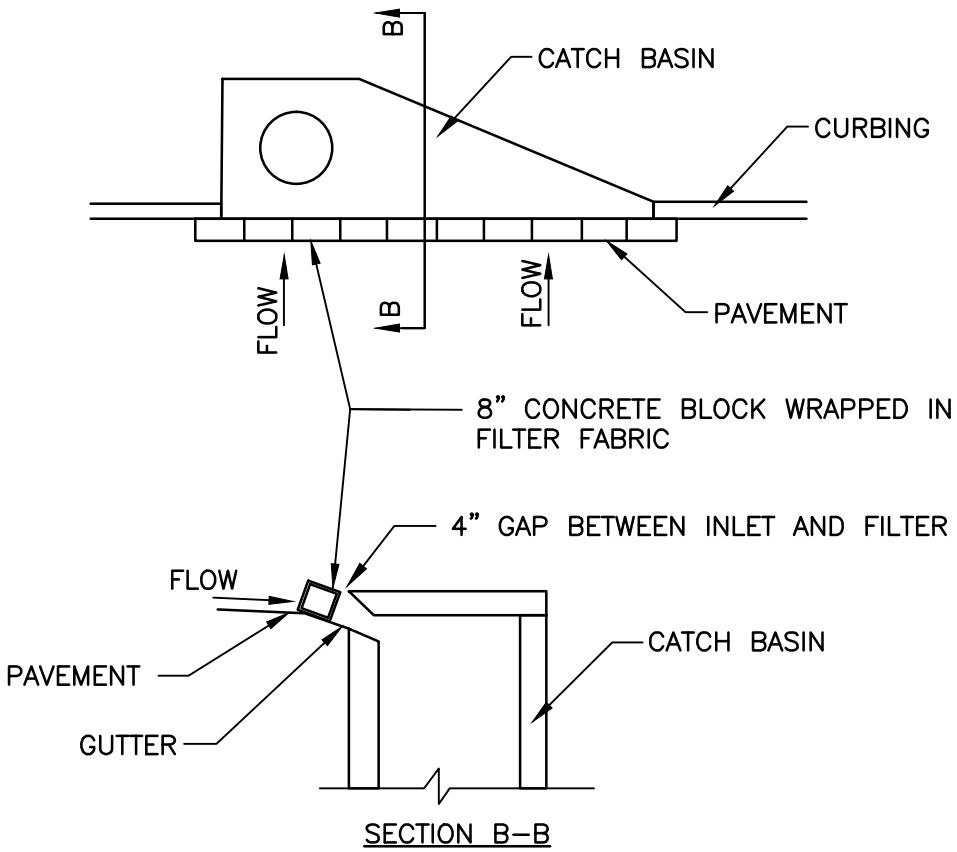

CURB INLET PROTECTION

ONCE PAVEMENT HAS BEEN INSTALLED, A CURB INLET FILTER SHALL BE INSTALLED ON INLETS RECEIVING RUNOFF FROM DISTURBED AREAS. THIS METHOD OF INLET PROTECTION SHALL BE REMOVED IF A SAFETY HAZARD IS CREATED.

ONE METHOD OF CURB INLET PROTECTION USES "PIGS–IN–A–BALNKET": 8–INCH CONCRETE BLOCKS WRAPPED IN FILTER FABRIC. SEE DETAIL. ANOTHER METHOD USES GRAVEL BAGS CONSTRUCTED BY WRAPING DOT #57 STONE WIHT FILTER FABRIC, WIRE, PLASTIC MESH, OR EQUIVALENT MATERIAL.
A GAP OF APPROXIMATELY 4 INCHES SHALL BE LEFT BETWEEN THE INLET FILTER AND THE INLET TO ALLOW FOR OVERFLOW AND PREVENT HAZARDOUS PONDING IN THE ROADWAY. PROPER INSTALLATION AND MAINTENANCE ARE CRUCIAL TO AVOID PONDING IN THE ROADWAY, RESULTING IN A HAZARDOUS CONDITION.

Sd2–P CURB INLET PROTECTION

THIS DETAIL WAS TAKEN FROM THE CITY OF ATLANTA'S WEBSITE. IT MAY HAVE BEEN MODIFIED AND SHOULD BE REVIEWED THOROUGHLY.

City of Atlanta	STANDARD DETAILS	REV. DATE: OCT. 2011 ORIG. DATE: NOV 2004 SCALE: N.T.S.
	CURB INLET PROTECTION 1 OF 2	DETAIL NO. ER–G_SD002

MAINTENANCE FOR ALL Sd2 APPLICATIONS

ALL TRAPS SHALL BE INSPECTED DAILY AND AFTER EACH RAIN AND REPAIRS MADE AS NEEDED.
SEDIMENT SHALL BE REMOVED WHEN THE SEDIMENT HAS ACCUMULATED TO ONE–HALF THE HEIGHT OF THE TRAP. SEDIMENT SHALL BE REMOVED FROM CURB INLET PROTECTION IMMEDIATELY. FOR EXCAVATED INLET SEDIMENT TRAPS, SEDIMENT SHALL BE REMOVED WHEN ONE–HALF OF THE SEDIMENT STORAGE CAPACITY HAS BEEN LOST TO SEDIMENT ACCUMULATION. SOD INLET PROTECTION SHAL BE MAINTAINED AS SPECIFIED IN DS4– DISTURBED AREA STABLIZATION (WITH SODDING).

SEDIMENT SHALL NOT BE WASHED INTO THE INLET. IT SHALL BE REMOVED FROM THE SEDIMENT TRAP AND DISPOSED OF AND STABILIZED SO THAT IT WILL NOT ENTER THE INLET, AGAIN.
WHEN THE CONTRIBUTING DRAINAGE AREA HAS BEEN PERMANENTLY STABILIZED, ALL MATERIALS AND ANY SEDIMENT SHALL BE REMOVED, AND EITHER SALVAGED OR DISPOSED OF PROPERLY. THE DISTURBED AREA SHALL BE BROUGHT TO PROPER GRADE, THEN SMOOTHED AND COMPACTED. ALL DISTURBED AREAS AROUND THE INLET SHALL BE APPROPRIATELY STABILIZED.

DESIGN CRITERIA FOR ALL Sd2 APPLICATIONS

MANY SEDIMENT FILTERING DEVICES CAN BE DESIGNED TO SERVE AS TEMPORARY SEDIMENT TRAPS. SEDIMENT TRAPS MUST BE SELF–DRAINING UNLESS THEY ARE OTHERWISE PROTECTED IN AN APPROVED FASHION THAT WILL NOT PRESENT A SAFETY HAZARD. **THE** AREA DRAINING TO THE INLET SEDIMENT TRAP SHALL BE NO GREATER THAN ONE ACRE.

IF RUNOFF MAY BYPASS THE PROTECTED INLET, A TEMPORARY DIKE SHOULD BE CONSTRUCTED ON THE DOWN SLOPE SIDE OF THE STRUCTURE. ALSO, A STONE FILTER RING MAY BE USED ON THE UP SLOPE SIDE OF THE INLET TO SLOW RUNOFF AND FILTER LARGER SOIL PARTICLES. REFER TO FR–STONE FILTER RING.

THIS DETAIL WAS TAKEN FROM THE CITY OF ATLANTA'S WEBSITE. IT MAY HAVE BEEN MODIFIED AND SHOULD BE REVIEWED THOROUGHLY.

City of Atlanta	STANDARD DETAILS	REV. DATE: OCT. 2011 ORIG. DATE: NOV 2004 SCALE: N.T.S.
	CURB INLET PROTECTION 2 OF 2	DETAIL NO. ER–G_SD002

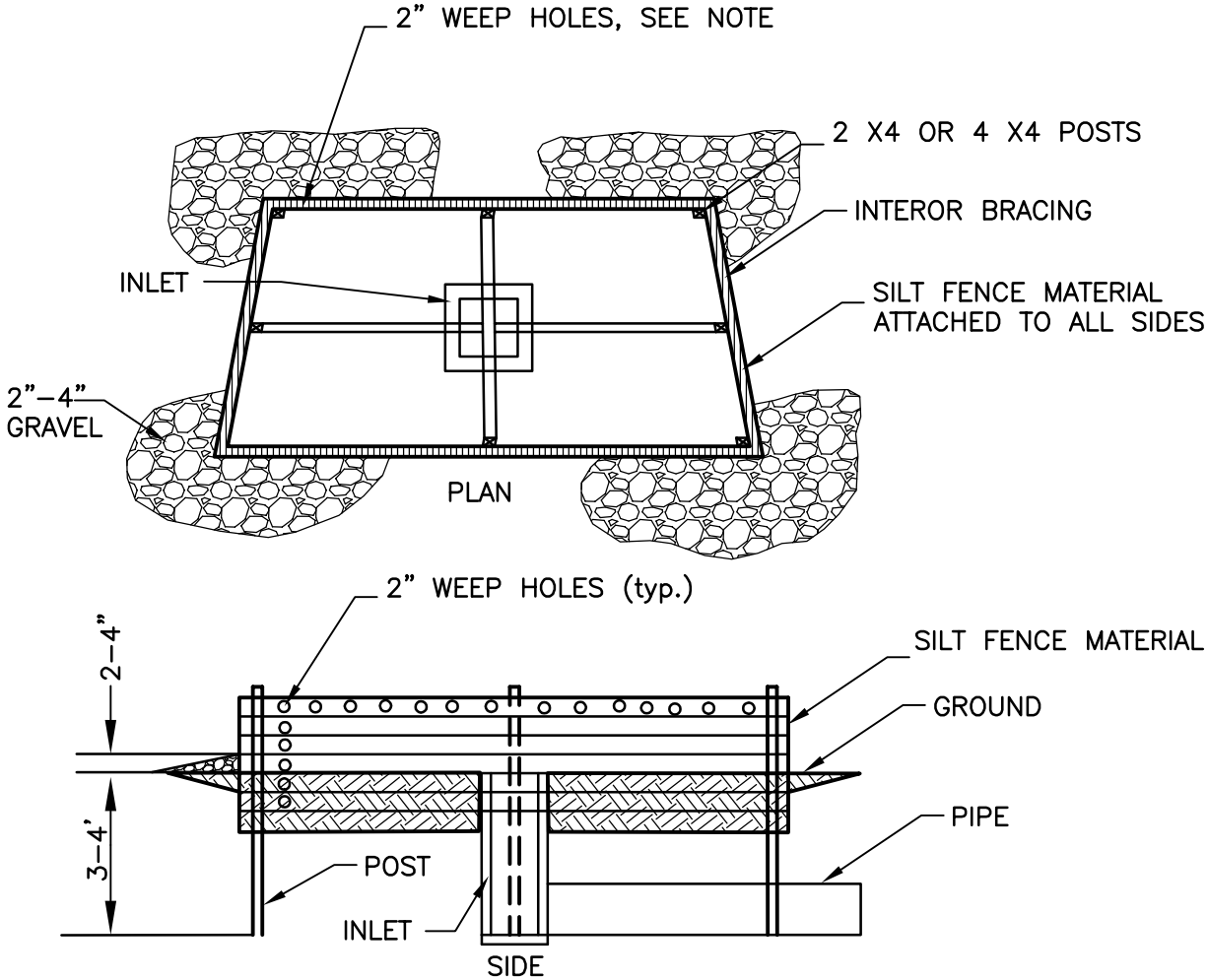

BAFFLE BOX

FOR INLETS RECEIVING RUNOFF WITH A HIGHER VOLUME OR VELOCITY, A BAFFLE BOX INLET SEDIMENT TRAP SHOULD BE USED. AS SHOWN IN FIGURE 6–21.2, THE BAFFLE BOX SHALL BE CONSTRUCTED OF 2" X 4" BOARDS SPACED A MAXIMUM OF 1 INCH APART OR OF PLYWOOD WITH WEEP HOLES 2 INCHES IN DIAMETER. THE WEEP HOLES SHALL BE PLACED APPROXIMATELY 6 INCHES ON CENTER VERTICALLY AND HORIZONTALLY. GRAVEL SHALL BE PLACED OUTSIDE THE BOX, ALL AROUND THE INLET, TO A DEPTH OF 2 TO 4 INCHES. THE ENTIRE BOX IS WRAPPED IN TYPE C FILTER FABRIC THAT SHALL BE ENTRENCHED 12 INCHES AND BACK FILLED.

Sd2–B BAFFLE BOX

THIS DETAIL WAS TAKEN FROM THE CITY OF ATLANTA'S WEBSITE. IT MAY HAVE BEEN MODIFIED AND SHOULD BE REVIEWED THOROUGHLY.

City of Atlanta	STANDARD DETAILS	REV. DATE: OCT. 2011 ORIG. DATE: NOV 2004 SCALE: N.T.S.
	BAFFLE BOX 1 OF 2	DETAIL NO. ER–G_SD003

MAINTENANCE FOR ALL Sd2 APPLICATIONS

ALL TRAPS SHALL BE INSPECTED DAILY AND AFTER EACH RAIN AND REPAIRS MADE AS NEEDED.
SEDIMENT SHALL BE REMOVED WHEN THE SEDIMENT HAS ACCUMULATED TO ONE-HALF THE HEIGHT OF THE TRAP. SEDIMENT SHALL BE REMOVED FROM CURB INLET PROTECTION IMMEDIATELY. FOR EXCAVATED INLET SEDIMENT TRAPS, SEDIMENT SHALL BE REMOVED WHEN ONE-HALF OF THE SEDIMENT STORAGE CAPACITY HAS BEEN LOST TO SEDIMENT ACCUMULATION. SOD INLET PROTECTION SHAL BE MAINTAINED AS SPECIFIED IN DS4- DISTURBED AREA STABLIZATION (WITH SODDING).

SEDIMENT SHALL NOT BE WASHED INTO THE INLET. IT SHALL BE REMOVED FROM THE SEDIMENT TRAP AND DISPOSED OF AND STABILIZED SO THAT IT WILL NOT ENTER THE INLET, AGAIN.
WHEN THE CONTRIBUTING DRAINAGE AREA HAS BEEN PERMANENTLY STABILIZED, ALL MATERIALS AND ANY SEDIMENT SHALL BE REMOVED, AND EITHER SALVAGED OR DISPOSED OF PROPERLY. THE DISTURBED AREA SHALL BE BROUGHT TO PROPER GRADE, THEN SMOOTHED AND COMPACTED. ALL DISTURBED AREAS AROUND THE INLET SHALL BE APPROPRIATELY STABILIZED.

DESIGN CRITERIA FOR ALL Sd2 APPLICATIONS

MANY SEDIMENT FILTERING DEVICES CAN BE DESIGNED TO SERVE AS TEMPORARY SEDIMENT TRAPS. SEDIMENT TRAPS MUST BE SELF-DRAINING UNLESS THEY ARE OTHERWISE PROTECTED IN AN APPROVED FASHION THAT WILL NOT PRESENT A SAFETY HAZARD. **THE** AREA DRAINING TO THE INLET SEDIMENT TRAP SHALL BE NO GREATER THAN ONE ACRE.

IF RUNOFF MAY BYPASS THE PROTECTED INLET, A TEMPORARY DIKE SHOULD BE CONSTRUCTED ON THE DOWN SLOPE SIDE OF THE STRUCTURE. ALSO, A STONE FILTER RING MAY BE USED ON THE UP SLOPE SIDE OF THE INLET TO SLOW RUNOFF AND FILTER LARGER SOIL PARTICLES. REFER TO FR-STONE FILTER RING.

THIS DETAIL WAS TAKEN FROM THE CITY OF ATLANTA'S WEBSITE. IT MAY HAVE BEEN MODIFIED AND SHOULD BE REVIEWED THOROUGHLY.

City of Atlanta	STANDARD DETAILS	REV. DATE: OCT. 2011 ORIG. DATE: NOV 2004 SCALE: N.T.S.
	CURB INLET PROTECTION 2 OF 2	DETAIL NO. ER-G_SD003

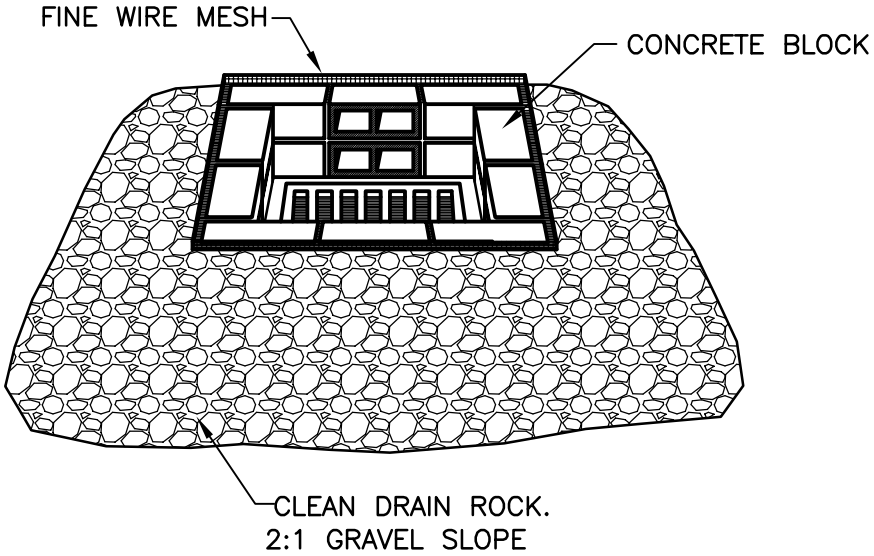

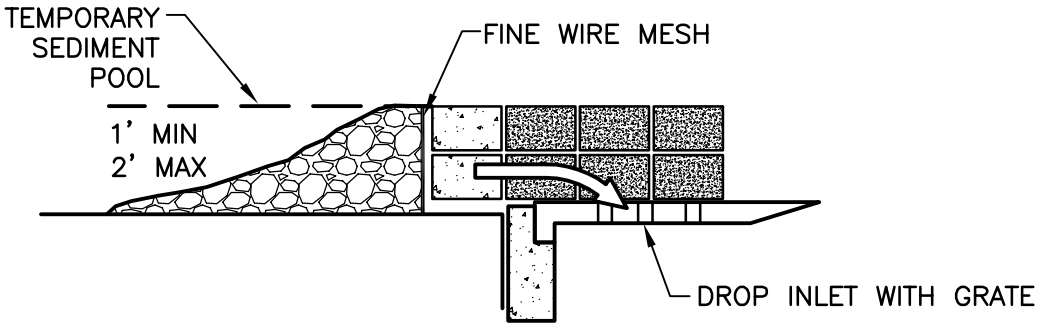

BLOCK AND GRAVEL DROP INLET PROTECTION

THIS METHOD OF INLET PROTECTION IS APPLICABLE WHERE HEAVY FLOWS ARE EXPECTED AND WHERE AN OVERFLOW CAPACITY IS NECESSARY TO PREVENT EXCESSIVE PONDING AROUND THE STRUCTURE. AS SHOWN IN DETAIL ONE BLOCK IS PLACED ON EACH SIDE OF THE STRUCTURE ON ITS SIDE IN THE BOTTOM ROW TO ALLOW POOL DRAINAGE. THE FOUNDATION SHOULD BE EXCAVATED AT LEAST 2 INCHES BELOW THE CREST OF THE STORM DRAIN. THE BOTTOM ROW OF BLOCKS ARE PLACED AGAINST THE EDGE OF THE STORM DRAIN FOR LATER SUPPORT AND TO AVOID WASHOUTS WHEN OVERFLOW OCCURS. IF NEEDED, LATERAL SUPPORT MAY BE GIVEN TO SUBSEQUENT ROWS BY PLACING 2" X 4" WOOD STUDS THROUGH BLOCK OPENINGS. HARD WARE CLOTH OR COMPARABLE WIRE MESH WITH 1/2 INCH OPENINGS SHALL BE FITTED OVER ALL BLOCK OPENINGS TO HOLD GRAVEL IN PLACE. CLEAN GRAVEL SHOULD BE PLACED 2 INCHES BELOW THE TOP OF THE BLOCKS ON A 2:1 SLOPE OR FLATTER AND SMOOTHED TO AN EVEN GRADE. DOT #57 WASHED STONE IS RECOMMENDED.

Sd2–Bg BLOCK AND GRAVEL DROP INLET PROTECTION

THIS DETAIL WAS TAKEN FROM THE CITY OF ATLANTA'S WEBSITE. IT MAY HAVE BEEN MODIFIED AND SHOULD BE REVIEWED THOROUGHLY.

City of Atlanta	STANDARD DETAILS	REV.
	BLOCK AND GRAVEL DROP INLET PROTECTION 1 OF 2	DATE: OCT. 2011 ORIG. DATE: NOV 2004 SCALE: N.T.S. DETAIL NO. ER–G_SD004

MAINTENANCE FOR ALL Sd2 APPLICATIONS

ALL TRAPS SHALL BE INSPECTED DAILY AND AFTER EACH RAIN AND REPAIRS MADE AS NEEDED.
SEDIMENT SHALL BE REMOVED WHEN THE SEDIMENT HAS ACCUMULATED TO ONE–HALF THE HEIGHT OF THE TRAP. SEDIMENT SHALL BE REMOVED FROM CURB INLET PROTECTION IMMEDIATELY. FOR EXCAVATED INLET SEDIMENT TRAPS, SEDIMENT SHALL BE REMOVED WHEN ONE–HALF OF THE SEDIMENT STORAGE CAPACITY HAS BEEN LOST TO SEDIMENT ACCUMULATION. SOD INLET PROTECTION SHAL BE MAINTAINED AS SPECIFIED IN DS4– DISTURBED AREA STABLIZATION (WITH SODDING).

SEDIMENT SHALL NOT BE WASHED INTO THE INLET. IT SHALL BE REMOVED FROM THE SEDIMENT TRAP AND DISPOSED OF AND STABILIZED SO THAT IT WILL NOT ENTER THE INLET, AGAIN.
WHEN THE CONTRIBUTING DRAINAGE AREA HAS BEEN PERMANENTLY STABILIZED, ALL MATERIALS AND ANY SEDIMENT SHALL BE REMOVED, AND EITHER SALVAGED OR DISPOSED OF PROPERLY. THE DISTURBED AREA SHALL BE BROUGHT TO PROPER GRADE, THEN SMOOTHED AND COMPACTED. ALL DISTURBED AREAS AROUND THE INLET SHALL BE APPROPRIATELY STABILIZED.

DESIGN CRITERIA FOR ALL Sd2 APPLICATIONS

MANY SEDIMENT FILTERING DEVICES CAN BE DESIGNED TO SERVE AS TEMPORARY SEDIMENT TRAPS. SEDIMENT TRAPS MUST BE SELF–DRAINING UNLESS THEY ARE OTHERWISE PROTECTED IN AN APPROVED FASHION THAT WILL NOT PRESENT A SAFETY HAZARD. **THE** AREA DRAINING TO THE INLET SEDIMENT TRAP SHALL BE NO GREATER THAN ONE ACRE.

IF RUNOFF MAY BYPASS THE PROTECTED INLET, A TEMPORARY DIKE SHOULD BE CONSTRUCTED ON THE DOWN SLOPE SIDE OF THE STRUCTURE. ALSO, A STONE FILTER RING MAY BE USED ON THE UP SLOPE SIDE OF THE INLET TO SLOW RUNOFF AND FILTER LARGER SOIL PARTICLES. REFER TO FR–STONE FILTER RING.

THIS DETAIL WAS TAKEN FROM THE CITY OF ATLANTA'S WEBSITE. IT MAY HAVE BEEN MODIFIED AND SHOULD BE REVIEWED THOROUGHLY.

City of Atlanta	STANDARD DETAILS	REV.
	BLOCK AND GRAVEL DROP INLET PROTECTION 2 OF 2	DATE: OCT. 2011 ORIG. DATE: NOV 2004 SCALE: N.T.S.
		DETAIL NO. ER–G_SD004

MAINTENANCE FOR ALL Sd2 APPLICATIONS

ALL TRAPS SHALL BE INSPECTED DAILY AND AFTER EACH RAIN AND REPAIRS MADE AS NEEDED.
SEDIMENT SHALL BE REMOVED WHEN THE SEDIMENT HAS ACCUMULATED TO ONE-HALF THE HEIGHT OF THE TRAP. SEDIMENT SHALL BE REMOVED FROM CURB INLET PROTECTION IMMEDIATELY. FOR EXCAVATED INLET SEDIMENT TRAPS, SEDIMENT SHALL BE REMOVED WHEN ONE-HALF OF THE SEDIMENT STORAGE CAPACITY HAS BEEN LOST TO SEDIMENT ACCUMULATION. SOD INLET PROTECTION SHAL BE MAINTAINED AS SPECIFIED IN DS4- DISTURBED AREA STABLIZATION (WITH SODDING).

SEDIMENT SHALL NOT BE WASHED INTO THE INLET. IT SHALL BE REMOVED FROM THE SEDIMENT TRAP AND DISPOSED OF AND STABILIZED SO THAT IT WILL NOT ENTER THE INLET, AGAIN.
WHEN THE CONTRIBUTING DRAINAGE AREA HAS BEEN PERMANENTLY STABILIZED, ALL MATERIALS AND ANY SEDIMENT SHALL BE REMOVED, AND EITHER SALVAGED OR DISPOSED OF PROPERLY. THE DISTURBED AREA SHALL BE BROUGHT TO PROPER GRADE, THEN SMOOTHED AND COMPACTED. ALL DISTURBED AREAS AROUND THE INLET SHALL BE APPROPRIATELY STABILIZED.

DESIGN CRITERIA FOR ALL Sd2 APPLICATIONS

MANY SEDIMENT FILTERING DEVICES CAN BE DESIGNED TO SERVE AS TEMPORARY SEDIMENT TRAPS. SEDIMENT TRAPS MUST BE SELF-DRAINING UNLESS THEY ARE OTHERWISE PROTECTED IN AN APPROVED FASHION THAT WILL NOT PRESENT A SAFETY HAZARD. **THE** AREA DRAINING TO THE INLET SEDIMENT TRAP SHALL BE NO GREATER THAN ONE ACRE.

IF RUNOFF MAY BYPASS THE PROTECTED INLET, A TEMPORARY DIKE SHOULD BE CONSTRUCTED ON THE DOWN SLOPE SIDE OF THE STRUCTURE. ALSO, A STONE FILTER RING MAY BE USED ON THE UP SLOPE SIDE OF THE INLET TO SLOW RUNOFF AND FILTER LARGER SOIL PARTICLES. REFER TO FR-STONE FILTER RING.

THIS DETAIL WAS TAKEN FROM THE CITY OF ATLANTA'S WEBSITE. IT MAY HAVE BEEN MODIFIED AND SHOULD BE REVIEWED THOROUGHLY.

City of Atlanta	STANDARD DETAILS	REV. DATE: OCT. 2011 ORIG. DATE: NOV 2004 SCALE: N.T.S.
	CURB INLET PROTECTION 2 OF 2	DETAIL NO. ER-G_SD005

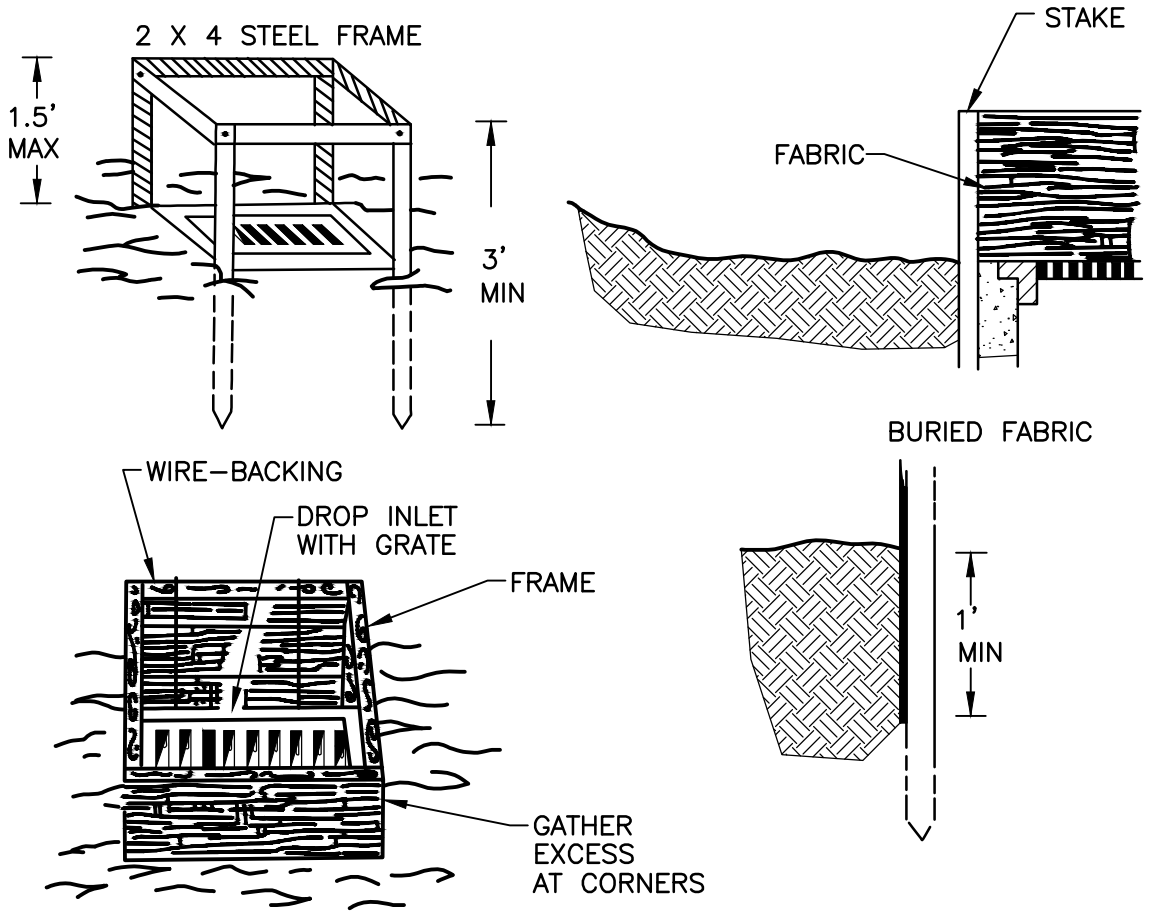

FILTER FABRIC WITH SUPPORTING FRAME

THIS METHOD OF INLET PROTECTION IS APPLICABLE WHERE THE INLET DRAINS A RELATIVELY FLAT AREA (SLOPE NO GREATER THAN 5%) AND SHALL NOT APPLY TO INLETS RECEIVING CONCENTRATED FLOWS, SUCH AS IN STREET OR HIGHWAY MEDIANS. AS SHOWN IN DETAIL, TYPE C SILT FENCE SUPPORTED BY STEEL POSTS SHALL BE USED. THE STAKES SHALL BE SPACED EVENLY AROUND THE PERIMETER OF THE INLET A MAXIMUM OF 3 FEET APART, AND SECURELY DRIVEN IN TO THE GROUND, APPORIMATELY 18 INCHES DEEP. THE FABRIC SHALL BE ENTRENCHED 12 INCHES AND BACKFILLED WITH WITH CRUSHED STONE OR COMPACTED SOIL. FABRIC AND WIRE SHALL BE SECURELY FASTENED TO THE POSTS, AND FABRIC ENDS MUST BE OVERLAPPED A MINIMUN OF 18 INCHES OR WRAPPPED TOGETHER AROUND A POST TO PROVIDE A CONTINUOUS
FABRIC BARRIER AROUND THE INLET.

Sd2-F FILTER FABRIC WITH SUPPORTING FRAME

THIS DETAIL WAS TAKEN FROM THE CITY OF ATLANTA'S WEBSITE. IT MAY HAVE BEEN MODIFIED AND SHOULD BE REVIEWED THOROUGHLY.

City of Atlanta	STANDARD DETAILS	REV. DATE: OCT. 2011 ORIG. DATE: NOV 2004 SCALE: N.T.S.
	FILTER FABRIC WITH SUPPORTING FRAME 1 OF 2	DETAIL NO. ER-G_SD005

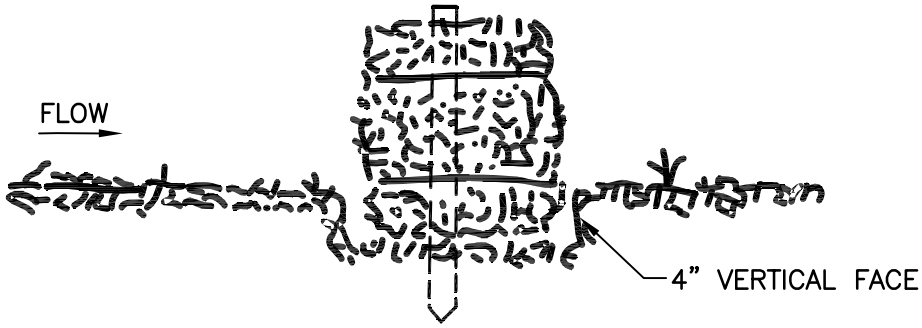

EMBEDDING DETAIL

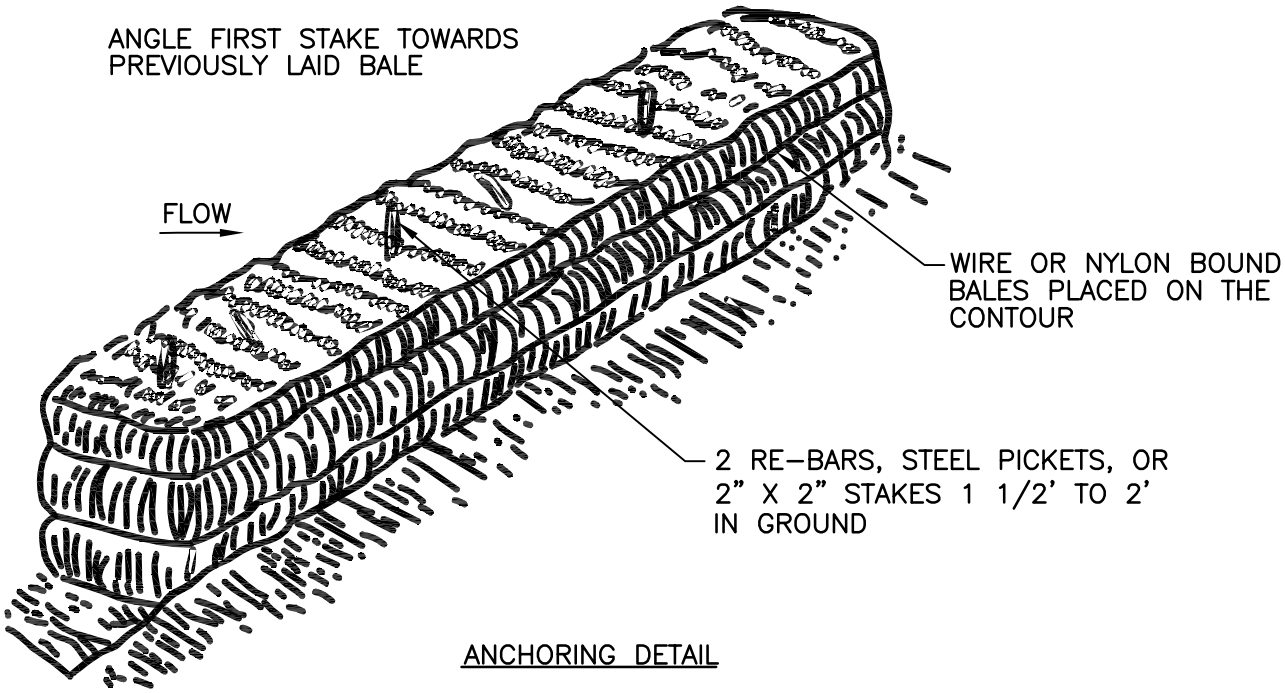

ANCHORING DETAIL

NOTE:
- ANCHOR AND EMBED INTO SOIL TO PREVENT WASHOUT OR WATER WORKING UNDER BARRIER
- REPAIR OR REPLACEMENT MUST BE MADE PROMPTLY AS NEEDED

Sd1-Hb STAKED HAYBALE BARRIERS

THIS DETAIL WAS TAKEN FROM THE CITY OF ATLANTA'S WEBSITE. IT MAY HAVE BEEN MODIFIED AND SHOULD BE REVIEWED THOROUGHLY.

City of Atlanta	STANDARD DETAILS	REV. DATE: OCT. 2011 ORIG. DATE: NOV 2004 SCALE: N.T.S.
	HAY OR STRAW BALES	DETAIL NO. ER-G_CD002

TEMPORARY STREAM CROSSINGS SHALL NOT BE USED ON STREAMS WITH DRAINAGE AREAS GREATER THAN ONE SQUARE MILE. STRUCTURES MAY INCLUDE BRIDGES, ROUND PIPES OR PIPE ARCHES.
TEMPORARY STREAM CROSSINGS SHOULD BE IN PLACE FOR LESS THAN ONE YEAR AND SHOULD NOT BE USED BY THE GENERAL PUBLIC.

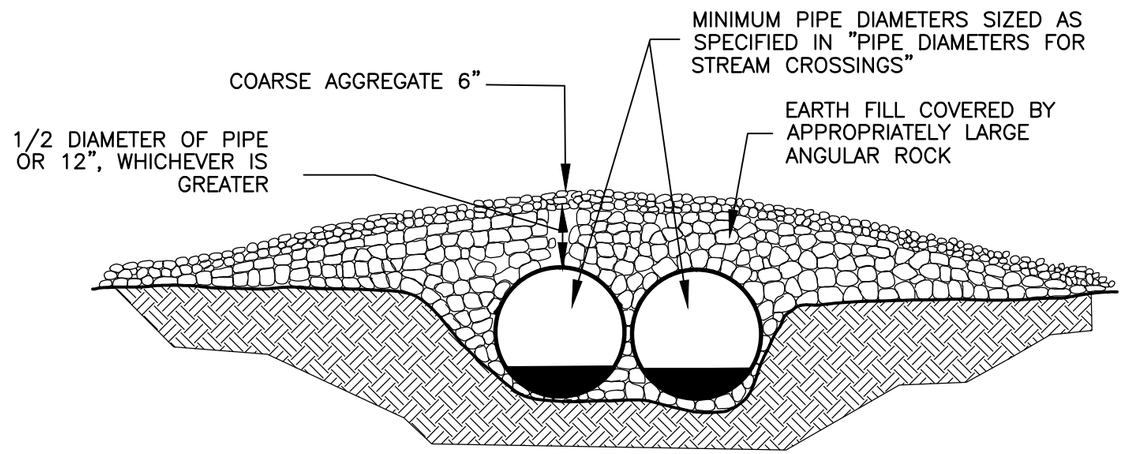

ELEVATION

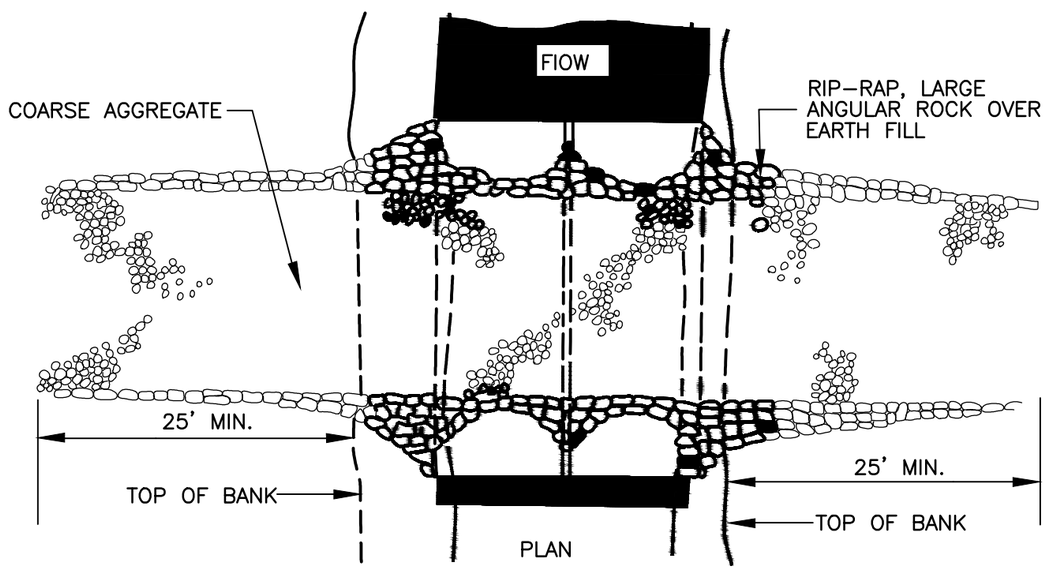

PLAN

Sr TEMPORARY STREAM CROSSING

THIS DETAIL WAS TAKEN FROM THE CITY OF ATLANTA'S WEBSITE. IT MAY HAVE BEEN MODIFIED AND SHOULD BE REVIEWED THOROUGHLY.

SIZE
THE STRUCTURE SHALL BE LARGE ENOUGH TO CONVEY THE FULL BANK FLOW OF THE STREAM, TYPICALLY FLOWS PRODUCED BY A 2-YEAR, 24-HOUR FREQUENCY STORM, WITHOUT APPRECIABLY ALTERING THE STREAM FLOW CHARACTERISTIC.

LOCATION
THE TEMPORARY STREAM CROSSING SHALL BE PERPENDICULAR TO THE STREAM. WHERE APPROACH CONDITIONS DICTATE, THE CROSSING MAY VARY 15% FROM THE PERPENDICULAR.

TEMPORARY BRIDGE CROSSING Sr-B

1. THE TEMPORARY BRIDGE SHALL BE CONSTRUCTED AT OR ABOVE BANK ELEVATION TO PREVENT THE ENTRAPMENT OF FLOATING MATERIALS AND DEBRIS.
2. ABUTMENTS SHALL BE PLACED PARALLEL TO AND ON STABLE BANKS.
3. BRIDGES SHALL BE CONSTRUCTED TO SPAN THE ENTIRE CHANNEL. IF THE CHANNEL WIDTH EXCEEDS EIGHT FEET (AS MEASURED FROM THE TOPS OF THE BANKS), A FOOTING, PIER OR BRIDGE SUPPORT MAY BE CONSTRUCTED WITHIN THE WATERWAY.
4. BRIDGES SHALL BE SECURELY ANCHORED AT ONLY ONE END USING STEEL CABLE OR CHAIN. THIS WILL PREVENT CHANNEL OBSTRUCTION IN THE EVENT THAT FLOODWATERS FLOAT THE BRIDGE. LARGE TREES, LARGE BOULDERS, OR DRIVEN STEEL ANCHORS CAN SERVE AS ANCHORS.

TEMPORARY CULVERT CROSSING Sr-C

1. THE INVERT ELEVATION OF THE CULVERT SHALL BE INSTALLED ON THE NATURAL STREAMBED GRADE.
2. THE CULVERT(S) SHALL EXTEND A MINIMUM OF ONE FOOT BEYOND THE UPSTREAM AND DOWNSTREAM TOE OF THE AGGREGATE PLACED AROUND THE CULVERT. IN NO CASE SHALL THE CULVERT EXCEED 40 FEET IN LENGTH.
3. THE CULVERT(S) SHALL BE COVERED WITH A MINIMUM OF ONE FOOT OF AGGREGATE. IF MULTIPLE CULVERTS ARE USED, THEY SHALL BE SEPARATED BY A MINIMUM OF 12 INCHES OF COMPACTED AGGREGATE FILL.

MAINTENANCE

THE STRUCTURE SHALL BE INSPECTED AFTER EVERY RAINFALL AND AT LEAST ONCE A WEEK, WHETHER IT HAS RAINED OR NOT, AND ALL DAMAGES REPAIRED IMMEDIATELY. THE STRUCTURE SHALL BE REMOVED IMMEDIATELY AFTER CONSTRUCTION IS FINISHED, AND THE STREAMBED AND BANKS MUST BE STABILIZED.

TO BE SHOWN ON THE EROSION AND SEDIMENT CONTROL PLAN

1. DRAINAGE AREA (ACRES), AVERAGE SLOPE OF WATERSHED (%), AND STREAM FLOW RATE AT BANKFUL FLOW (CFS)

2. DETAILED DIMENSIONS OF COMPONENTS FOR THE TYPE OF CROSSING TO BE USED

City of Atlanta

STANDARD DETAILS

TEMPORARY STREAM CROSSING

REV.
DATE: SEPT 2011
ORIG. DATE: NOV 2004
SCALE: N.T.S.

DETAIL NO. ER-G_SR001

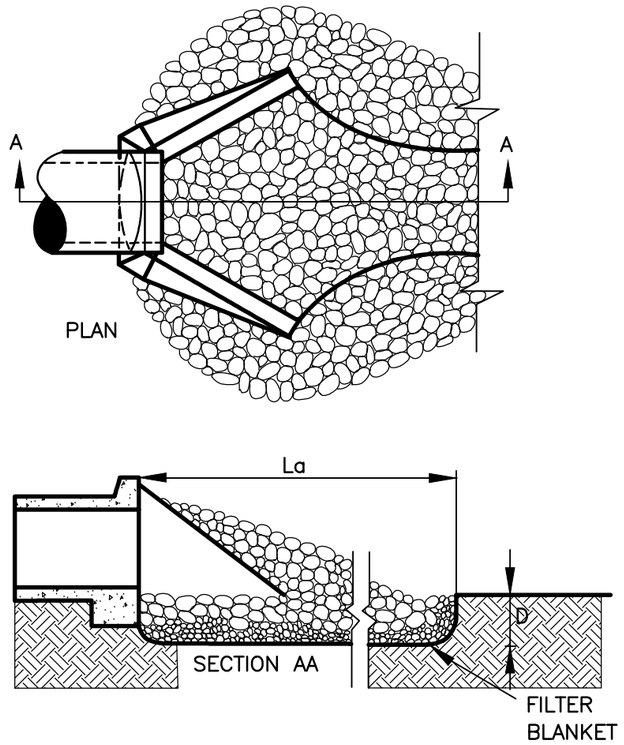

DETAILS MODIFIED FROM VA SWCC

PIPE OUTLET TO FLAT AREA–
NO WELL–DEFINED CHANNEL

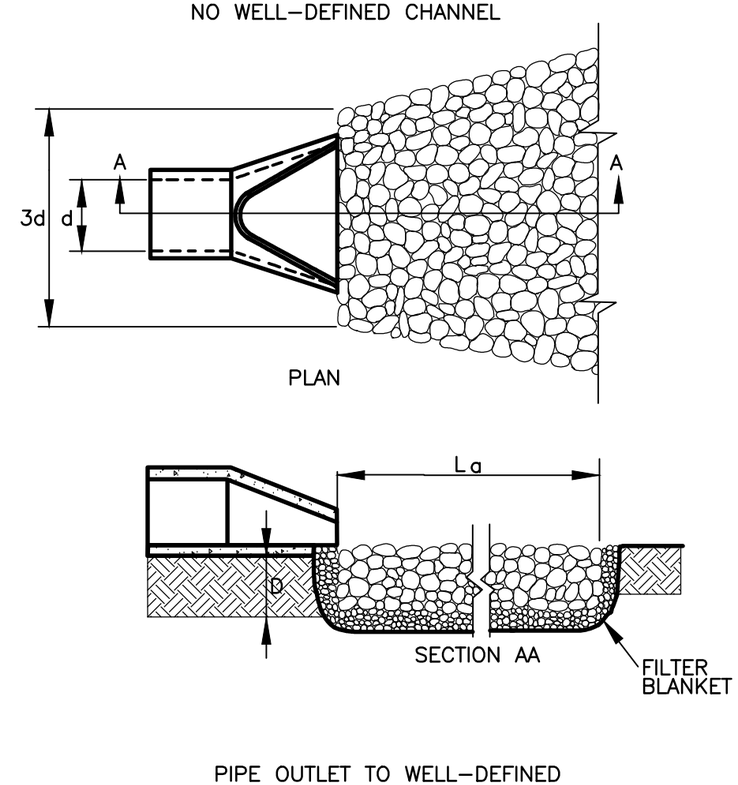

PIPE OUTLET TO WELL–DEFINED
CHANNEL

St STORM DRAIN OUTLET PROTECTION

TO BE SHOWN ON THE EROSION AND SEDIMENT CONTROL PLAN

1. THE FLOW CHARACTERISTICS OF THE PIPE AT FULL FLOW INCLUDING PIPE DIAMETER, FLOW RATE (CFS), VELOCITY (FPS), AND TAILWATER CONDITION

2. THE DIMENSIONS OF THE APRON INCLUDING LENGTH (La), WIDTH AT THE HEADWALL (W_1), DOWNSTREAM WIDTH (W_2), AVERAGE STONE DIAMETER (d_{50}), MAX STONE SIZE (dmax) AND STONE DEPTH (D) DESIGNED IN ACCORDANCE WITH FIGURES 6–24.1 AND 6– 24.2 IN GREEN BOOK.

15

THIS DETAIL WAS TAKEN FROM THE CITY OF ATLANTA'S WEBSITE. IT MAY HAVE BEEN MODIFIED AND SHOULD BE REVIEWED THOROUGHLY.

City of Atlanta

STANDARD DETAILS

STORM DRAIN OUTLET PROTECTION 1 OF 2

REV.
DATE: SEPT 2011
ORIG. DATE: NOV 2004
SCALE: N.T.S.

DETAIL NO. ER–G_ST001

NOTES ON DETAILS

1. $_aL$ IS THE LENGTH OF THE RIPRAP APRON.

2. D = 1.5 TIMES THE MAXIMUM STONE DIAMETER BUT NOT LESS THAN 6".

3. IN A WELL–DEFINED CHANNEL EXTEND THE APRON UP THE CHANNEL BANKS TO AN ELEVATION OF 6" ABOVE THE MAXIMUM TAILWATER DEPTH OF TO THE TOP OF THE BANK, WHICHEVER IS LESS.

4. A FILTER BLANKET OR FILTER FABRIC SHOULD BE INSTALLED BETWEEN THE RIPRAP AND SOIL FOUNDATION.

APRON LENGTH AND THICKNESS

THE APRON LENGTH AND d_{50}, STONE MEDIAN SIZE, SHALL BE DETERMINED FROM THE CURVES ACCORDING TO THE TAILWATER CONDITIONS:

MINIMUM TAILWATER– USE FIG. 6–24.1

MAXIMUM TAILWATER– USE FIGURE 6–24.2

MAXIMUM STONE SIZE= 1.5 x d_{50}

APRON THICKNESS= 1.5 x dmax

CONSTRUCTION SPECIFICATIONS

1. ENSURE THAT THE SUBGRADE FOR THE FILTER AND RIPRAP FOLLOWS THE REQUIRED LINES AND GRADES SHOWN IN THE PLAN. COMPACT ANY FILL REQUIRED IN THE SUBGRADE TO THE DENSITY OF THE SURROUNDING UNDISTURBED MATERIAL. LOW AREAS IN THE SUBGRADE ON UNDISTURBED SOIL MAY ALSO BE FILLED BY INCREASING THE RIPRAP THICKNESS.
2. THE RIPRAP AND GRAVEL FILTER MUST CONFORM TO THE SPECIFIED GRADING LIMITS SHOWN ON THE PLANS.
3. GEOTEXTILE MUST MEET DESIGN REQUIREMENTS AND BE PROPERLY PROTECTED FROM PUNCHING OR TEARING DURING INSTALLATION. REPAIR ANY DAMAGE BY REMOVING THE RIPRAP AND PLACING ANOTHER PIECE OF FILTER FABRIC OVER THE DAMAGED AREA. ALL CONNECTING JOINTS SHOULD OVERLAP A MINIMUM OF 1 FT. IF THE DAMAGE IS EXTENSIVE, REPLACE THE ENTIRE FILTER FABRIC.
4. RIPRAP MAY BE PLACED BY EQUIPMENT, BUT TAKE CARE TO AVOID DAMAGING THE FILTER FABRIC.
5. THE MINIMUM THICKNESS OF THE RIPRAP SHOULD BE 1.5 TIMES THE MAXIMUM STONE DIAMETER.
6. CONSTRUCT THE APRON ON ZERO GRADE WITH NO OVERFALL AT THE END. MAKE THE TOP OF THE RIPRAP AT THE DOWNSTREAM END LEVEL WITH THE RECEIVING AREA OR SLIGHTLY BELOW IT.
7. ENSURE THAT THE APRON IS PROPERLY ALIGNED WITH THE RECEIVING STREAM AND PREFERABLY STRAIGHT THROUGHOUT ITS LENGTH. IF A CURVE IS NEEDED TO FIT SITE CONDITIONS, PLACE IT IN THE UPPER SECTION OF THE APRON.
8. IMMEDIATELY AFTER CONSTRUCTION, STABILIZE ALL DISTURBED AREAS WITH VEGETATION.
9. STONE QUALITY – SELECT STONE FOR RIPRAP FROM FIELD STONE OR QUARRY STONE. THE STONE SHOULD BE HARD, ANGULAR, AND HIGHLY WEATHER–RESISTANT. THE SPECIFIC GRAVITY OF THE INDIVIDUAL STONES SHOULD BE AT LEAST 2.5.
10. FILTER – INSTALL A FILTER TO PREVENT SOIL MOVEMENT THROUGH THE OPENINGS IN THE RIPRAP. THE FILTER SHOULD CONSIST OF A GRADED GRAVEL LAYER OR A SYNTHETIC FILTER CLOTH. SEE APPENDIX C; P. C–1.

MAINTENANCE

INSPECT RIPRAP OUTLET STRUCTURES AFTER HEAVY RAINS TO SEE IF ANY EROSION AROUND OR BELOW THE RIPRAP HAS TAKEN PLACE OR IF STONES HAVE BEEN DISLODGED. IMMEDIATELY MAKE ALL NEEDED REPAIRS TO PREVENT FURTHER DAMAGE.

THIS DETAIL WAS TAKEN FROM THE CITY OF ATLANTA'S WEBSITE. IT MAY HAVE BEEN MODIFIED AND SHOULD BE REVIEWED THOROUGHLY.

City of Atlanta

STANDARD DETAILS

STORM DRAIN OUTLET PROTECTION 2 OF 2

REV.
DATE: SEPT 2011
ORIG. DATE: NOV 2004
SCALE: N.T.S.

DETAIL NO. ER–G_ST001

GROOVING IS CUTTING FURROWS ALONG THE CONTOUR OF A SLOPE. IRREGULARITIES IN THE SOIL SURFACE CATCH RAINWATER AND PROVIDE SOME COVERAGE OF LIME, FERTILIZER, AND SEED

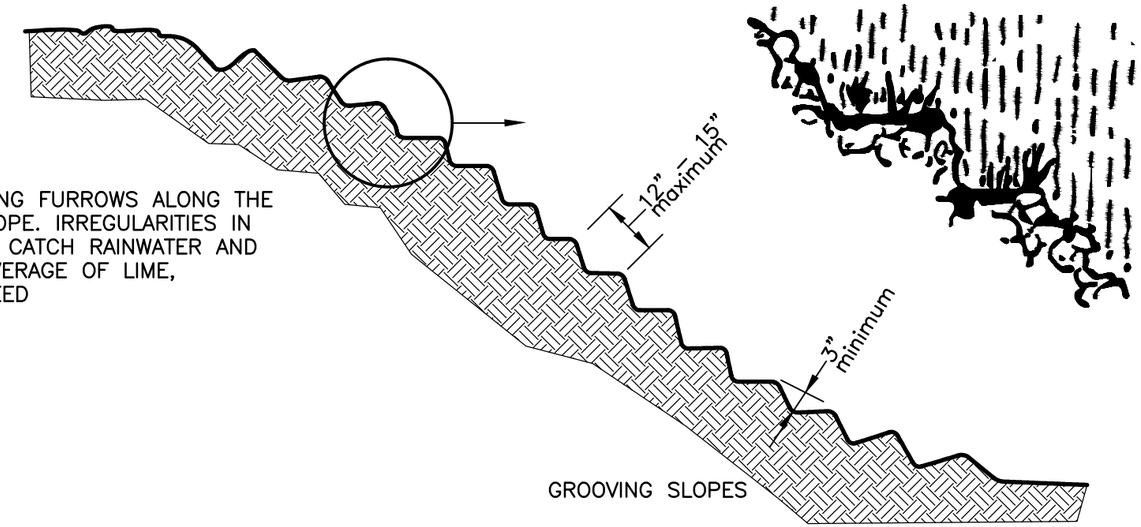

GROOVING SLOPES

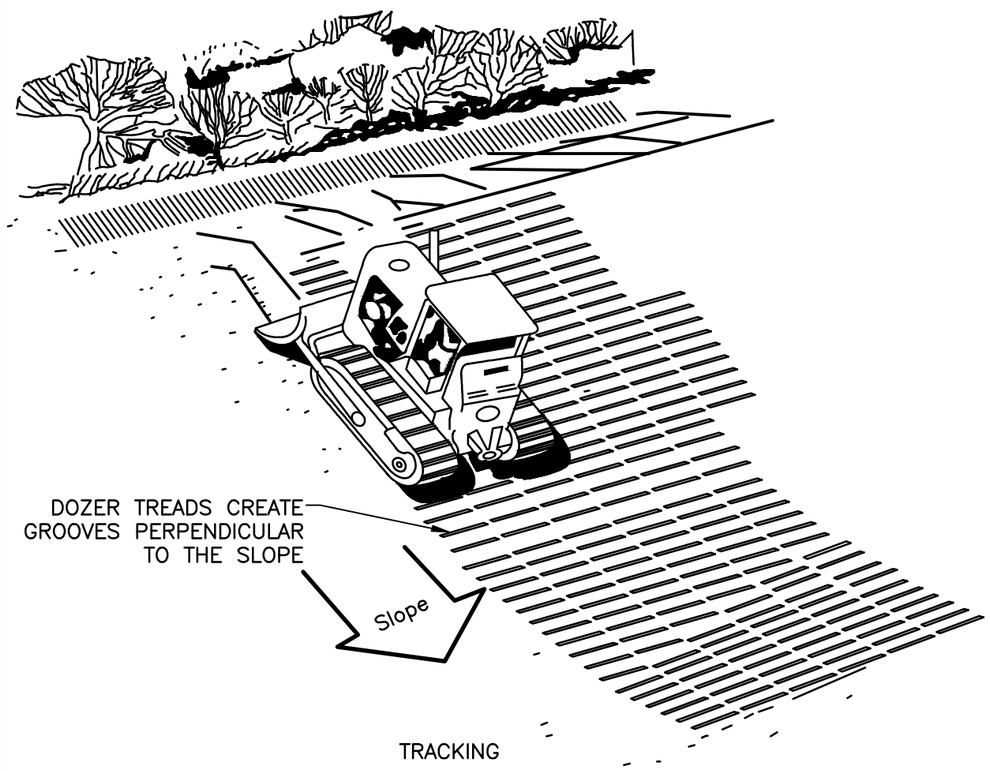

TRACKING

Su SURFACE ROUGHENING

SURFACE ROUGHENING

THE PURPOSES OF SURFACE ROUGHENING ARE TO AID IN ESTABLISHMENT OF VEGETATIVE COVER WITH SEED, TO REDUCE RUNOFF VELOCITY AND INCREASE INFILTRATION, AND TO REDUCE EROSION AND PROVIDE FOR SEDIMENT TRAPPING.
ALL SLOPES STEEPER THAN 3:1 REQUIRE SURFACE ROUGHENING, EITHER STAIR–STEP GRADING, GROOVING, FURROWING, OR TRACKING IF THEY ARE TO BE STABILIZED WITH VEGETATION. HOWEVER, IF THE SLOPE IS TO BE STABILIZED WITH EROSION CONTROL BLANKETS OR SOIL REINFORCEMENT MATTING, THE SOIL SURFACE SHOULD NOT BE ROUGHENED.
AREAS WITH GRADES LESS STEEP THAN 3:1 SHOULD HAVE THE SOIL SURFACE LIGHTLY ROUGHENED AND LOOSENED TO A DEPTH OF 2 TO 4 INCHES PRIOR TO SEEDING. AREAS WHICHHAVE BEEN GRADED AND WILL NOT BE STABILIZED IMMEDIATELY MAY BE ROUGHENED TO REDUCE RUNOFF VELOCITY UNTIL SEEDING TAKES PLACE. SLOPES WITH A STABLE ROCK FACE DO NOT REQUIRE ROUGHENING OR STABILIZATION.

GROOVING

GROOVING CONSISTS OF USING MACHINERY TO CREATE A SERIES OF RIDGES AND DEPRESSIONS WHICH RUN PERPENDICULAR TO THE SLOPE (ON THE CONTOUR). GROOVES MAY BE MADE WITH ANY APPROPRIATE IMPLEMENT WHICH CAN BE SAFELY OPERATED ON THE SLOPE AND WHICH WILL NOT CAUSE UNDUE COMPACTION.
SUGGESTED IMPLEMENTS INCLUDE DISCS, TILLERS, SPRING HARROWS, AND THE TEETH ON A FRONTEND LOADER BUCKET. SUCH GROOVES SHALL NOT BE LESS THAN 3 INCHES DEEP NOR FURTHER THAN 15 INCHES APART.

ROUGHENING WITH TRACKED MACHINERY

ROUGHENING WITH TRACKED MACHINERY ON CLAY SOILS IS NOT RECOMMENDED UNLESS NO ALTERNATIVES ARE AVAILABLE. UNDUE COMPACTION OF SURFACE SOIL RESULTS FROM THIS PRACTICE. SANDY SOILS DO NOT COMPACT SEVERELY AND MAY BE TRACKED. IN NO CASE IS TRACKING AS EFFECTIVE AS THE OTHER ROUGHENING METHODS DESCRIBED.
TRACKING SHALL BE DONE BY OPERATING TRACKED MACHINERY UP AND DOWN THE SLOPE TO LEAVE HORIZONTAL DEPRESSIONS IN THE SOIL. AS FEW PASSES OF THE MACHINERY AS POSSIBLE SHOULD BE MADE TO MINIMIZE COMPACTION.

SEEDING

ROUGHENED AREAS SHALL BE SEEDED AND MULCHED AS SOON AS POSSIBLE TO OBTAIN OPTIMUM SEED GERMINATION AND SEEDING GROWTH. REFER TO SPECIFICATIONS DS1, DS2, DS3, AND DS4 – DISTURBED AREA STABILIZATION (WITH MULCHING ONLY, TEMPORARY SEEDING, PERMANENT VEGETATION, AND SODDING), RESPECTIVELY.

THIS DETAIL WAS TAKEN FROM THE CITY OF ATLANTA'S WEBSITE. IT MAY HAVE BEEN MODIFIED AND SHOULD BE REVIEWED THOROUGHLY.

City of Atlanta	STANDARD DETAILS	REV. DATE: SEPT 2011 ORIG. DATE: NOV 2004 SCALE: N.T.S.
	SURFACE ROUGHENING	DETAIL NO. ER–G_SU001

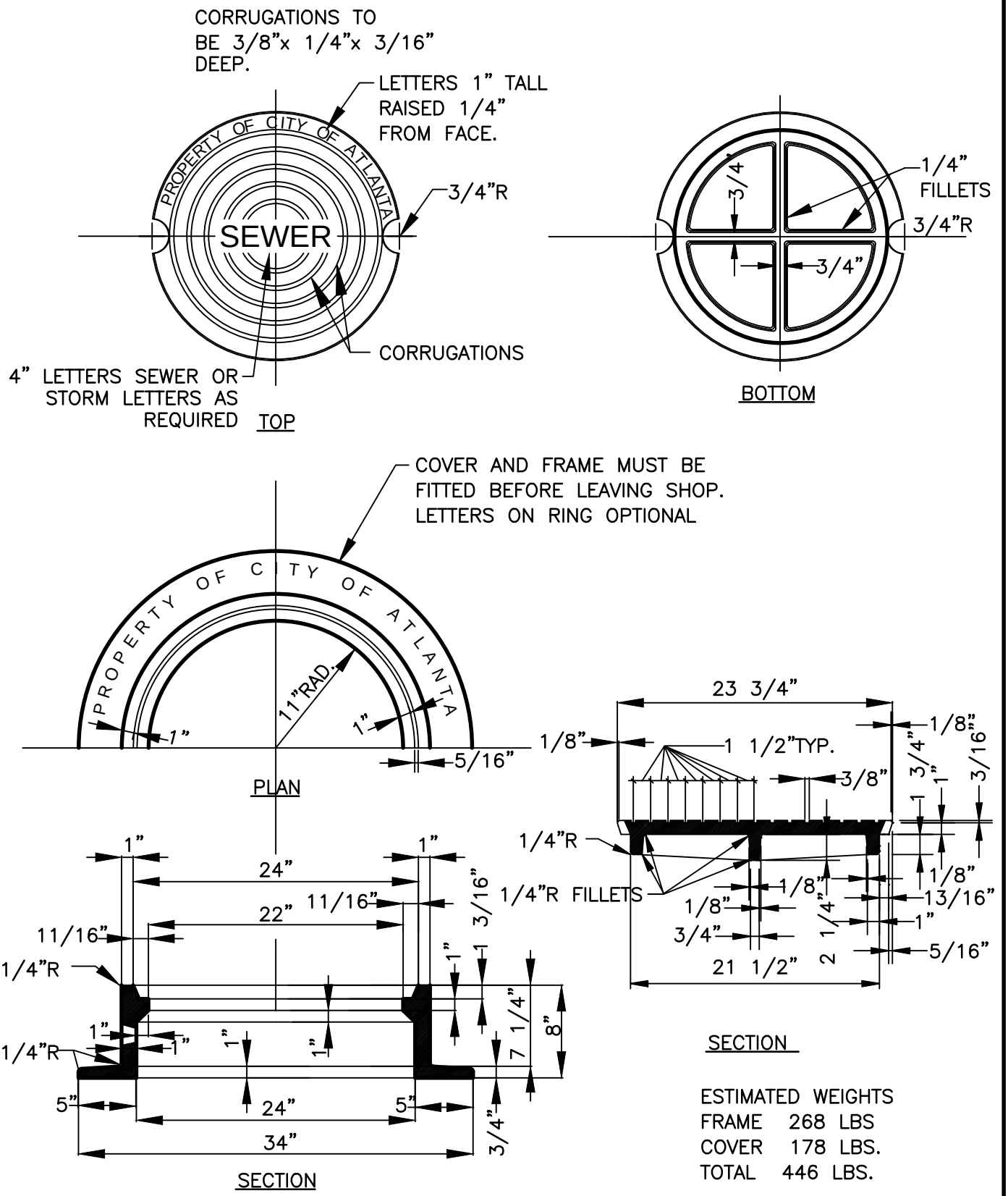

THIS DETAIL WAS TAKEN FROM THE CITY OF ATLANTA'S WEBSITE. IT MAY HAVE BEEN MODIFIED AND SHOULD BE REVIEWED THOROUGHLY.

City of Atlanta	STANDARD DETAILS	REV. DATE: SEPT 2011 ORIG. DATE: NOV 2004 SCALE: N.T.S.
	SOLID FRAME AND COVER	DETAIL NO. SG-G_FC002

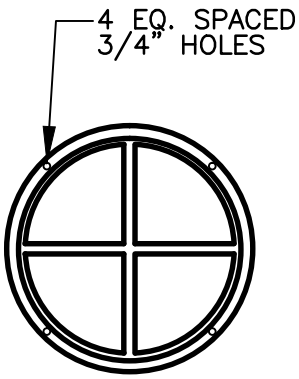

COVER BACK

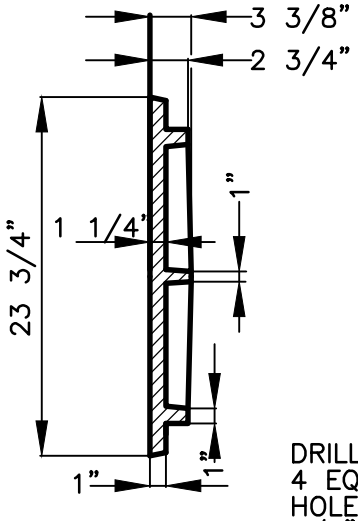

COVER SECTION

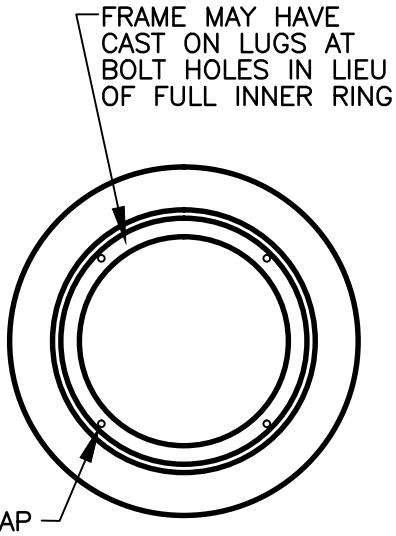

FRAME PLAN

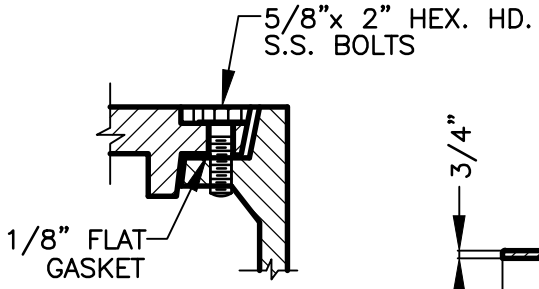

WATERTIGHT DETAIL

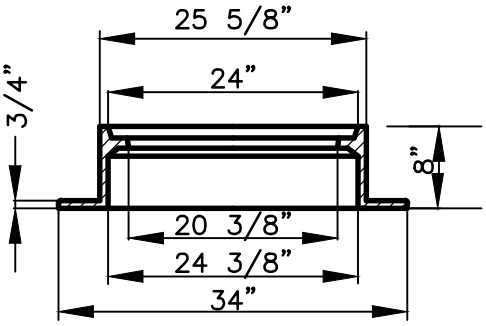

FRAME SECTION

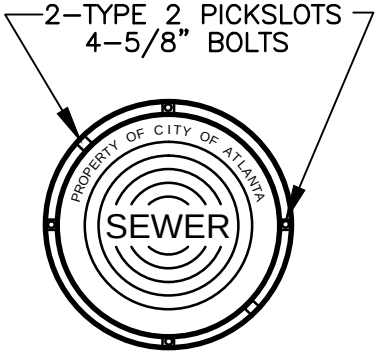

COVER FACE

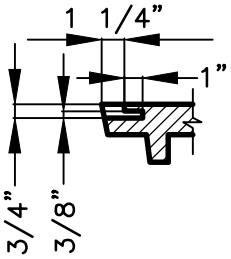

PICKSLOT DETAIL

(2) NON–
PENETRATING PICKHOLES

NOTE:
PROVIDE RAISED MATCH MARKS ON FRAME & COVER;
TWO PICK HOLES ON SIDE OF COVER & CORRUGATIONS.
NO PERFORATIONS.

APPROX. WEIGHTS
COVER 178 LBS.
FRAME 292 LBS.
TOTAL 470 LBS.

THIS DETAIL WAS TAKEN FROM THE CITY OF ATLANTA'S WEBSITE. IT MAY HAVE BEEN MODIFIED AND SHOULD BE REVIEWED THOROUGHLY.

City of Atlanta	STANDARD DETAILS	REV.
		DATE: SEPT 2011
	WATERTIGHT FRAME AND COVER	ORIG. DATE: NOV 2004
		SCALE: N.T.S.
		DETAIL NO. SG–G_FC003

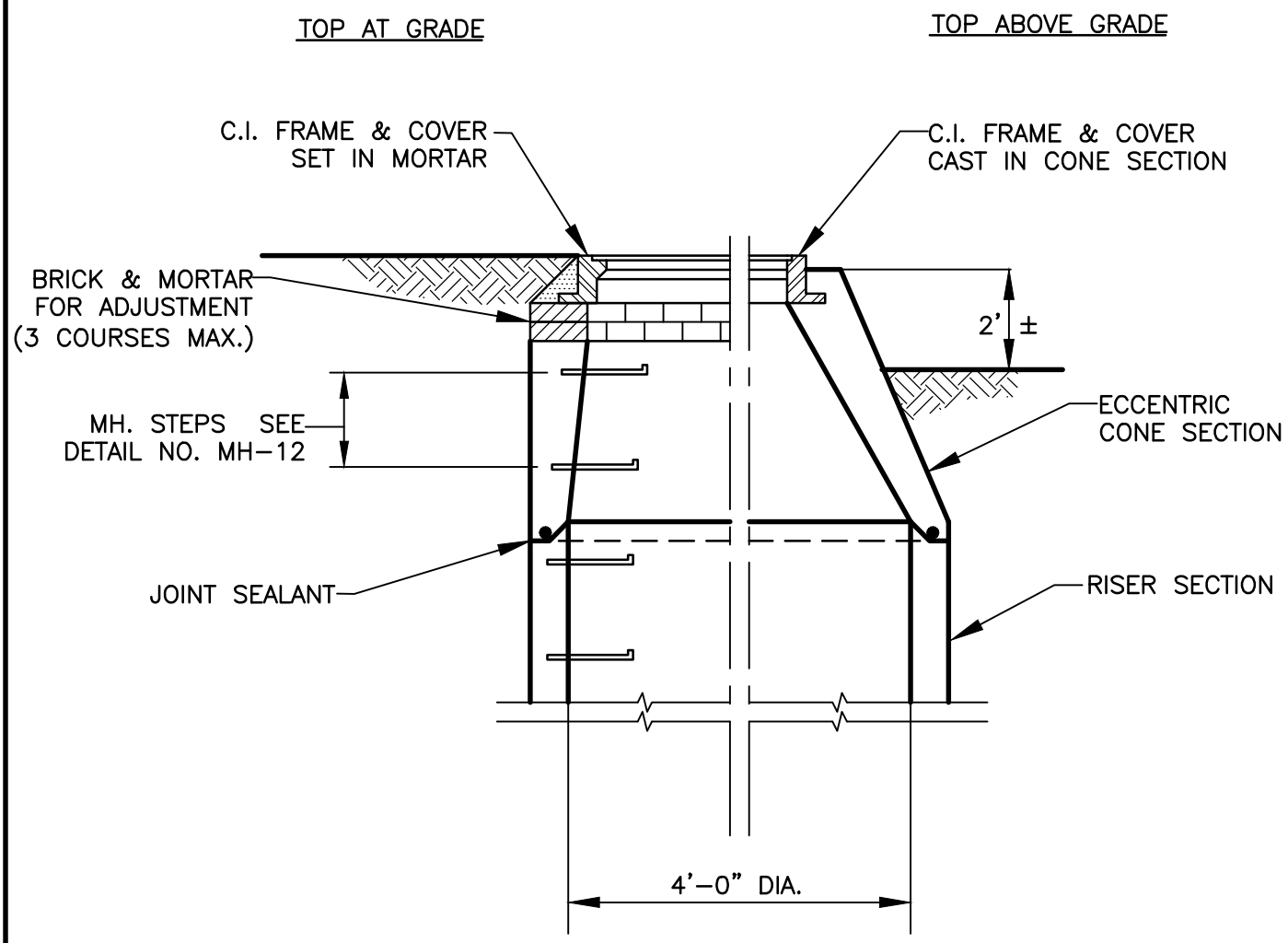

NOTE: FRAME & COVER SHALL BE CAST IN ALL CONE SECTIONS UNLESS FRAME & COVER IS TO BE FLUSH WITH FINAL GRADE.

THIS DETAIL WAS TAKEN FROM THE CITY OF ATLANTA'S WEBSITE. IT MAY HAVE BEEN MODIFIED AND SHOULD BE REVIEWED THOROUGHLY.

City of Atlanta	STANDARD DETAILS	REV. DATE: SEPT 2011 ORIG. DATE: NOV 1997 SCALE: N.T.S.
	MANHOLE RISER AND CONE	DETAIL NO. SG-G_MH002

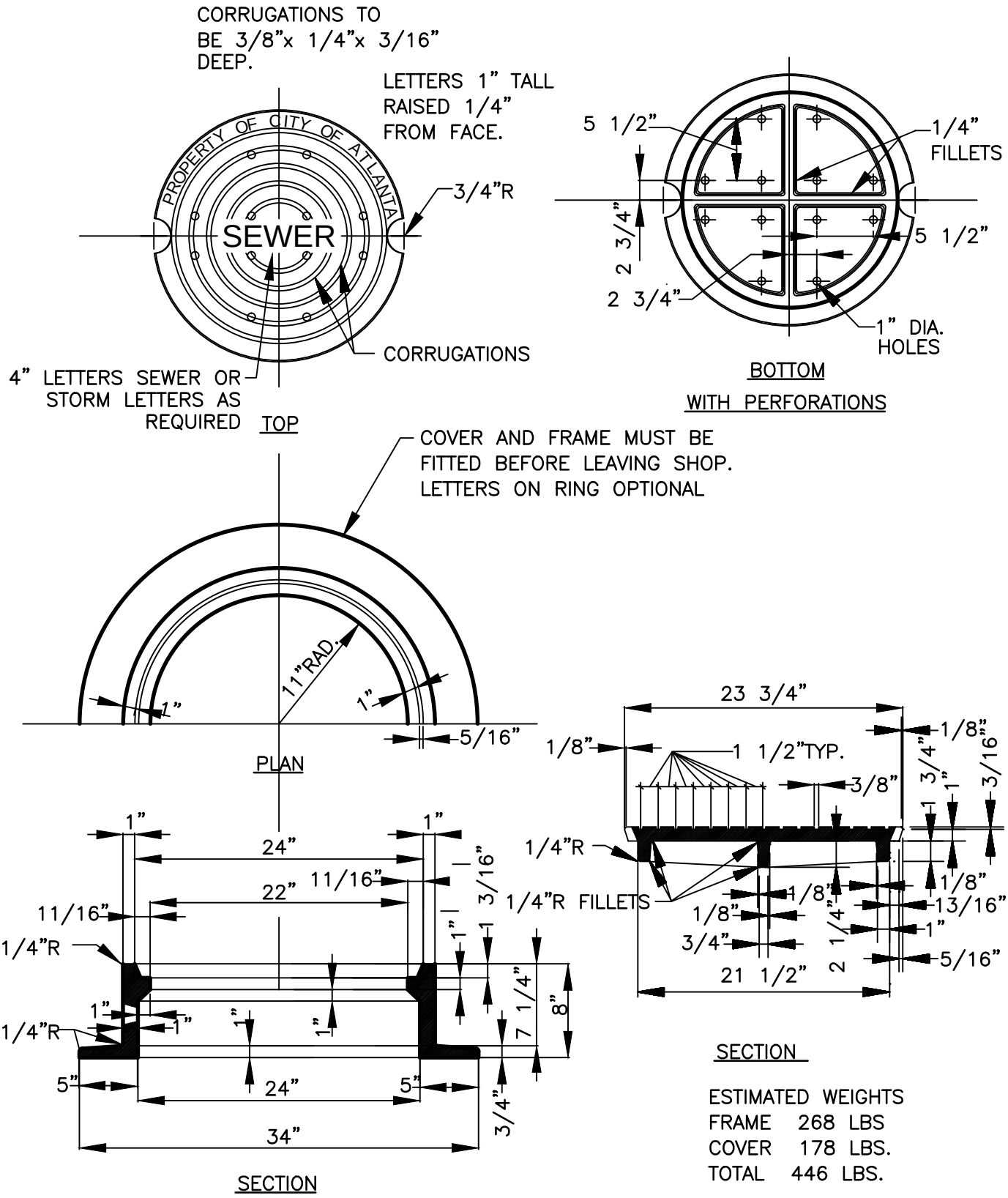

ESTIMATED WEIGHTS
FRAME 268 LBS
COVER 178 LBS.
TOTAL 446 LBS.

THIS DETAIL WAS TAKEN FROM THE CITY OF ATLANTA'S WEBSITE. IT MAY HAVE BEEN MODIFIED AND SHOULD BE REVIEWED THOROUGHLY.

City of Atlanta	STANDARD DETAILS	REV. DATE: SEPT 2011 ORIG. DATE: NOV 2004 SCALE: N.T.S.
	VENTED FRAME AMD COVER	DETAIL NO. SG-G_MH003

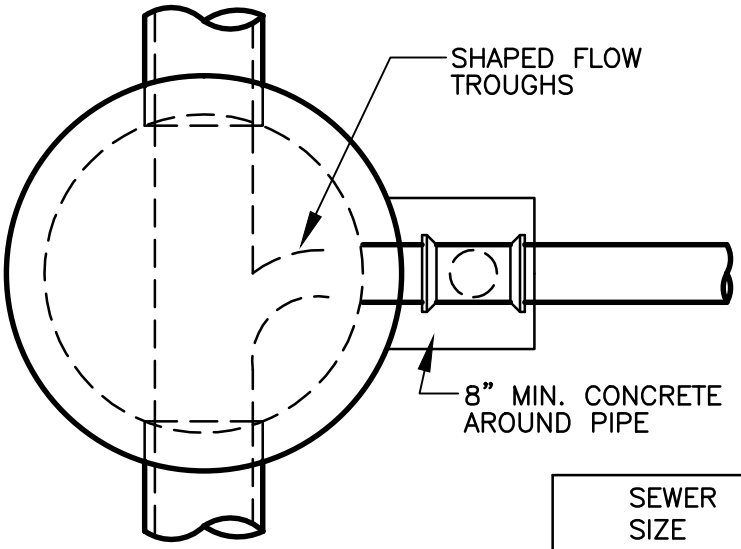

PLAN

SEWER SIZE	DROP SIZE
SEWER SIZE < 12"	SEWER SIZE
16"–20"	12"
24"–30"	18"
36"AND OVER	24"

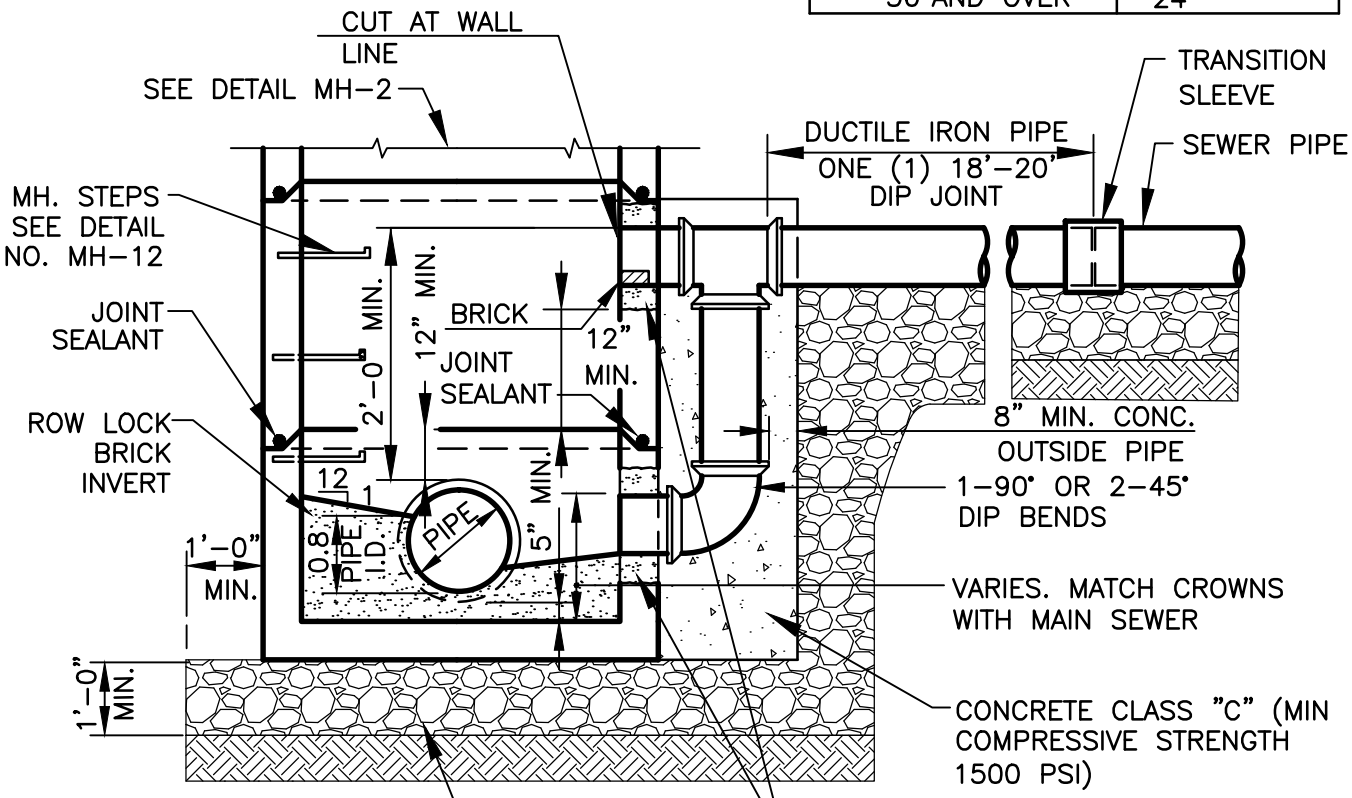

SECTION

NOTE: POUR CONCRETE AGAINST UNDISTURBED EARTH OR FORM. IF FORMED, FILL VOID UNDER PIPE WITH CRUSHED STONE.

THIS DETAIL WAS TAKEN FROM THE CITY OF ATLANTA'S WEBSITE. IT MAY HAVE BEEN MODIFIED AND SHOULD BE REVIEWED THOROUGHLY.

City of Atlanta

STANDARD DETAILS

MANHOLE BASE WITH DROP CONNECTION

REV.
DATE: SEPT 2011
ORIG. DATE: NOV 2004
SCALE: N.T.S.

DETAIL NO. SG–G_MH005

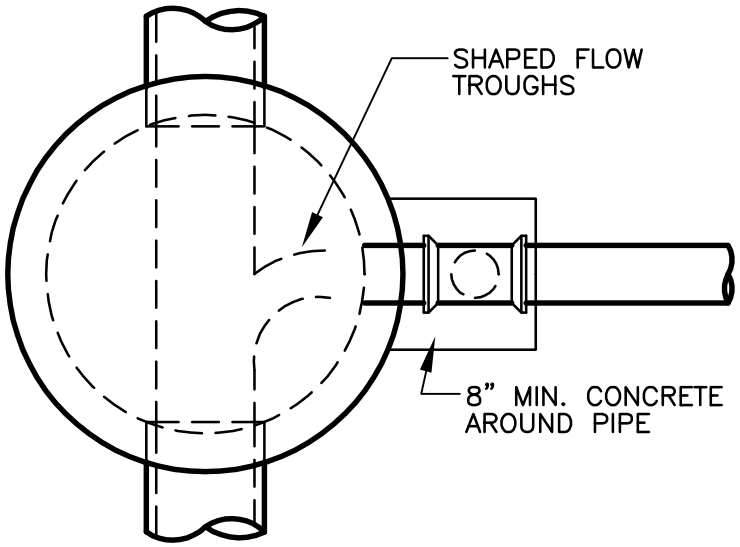

PLAN

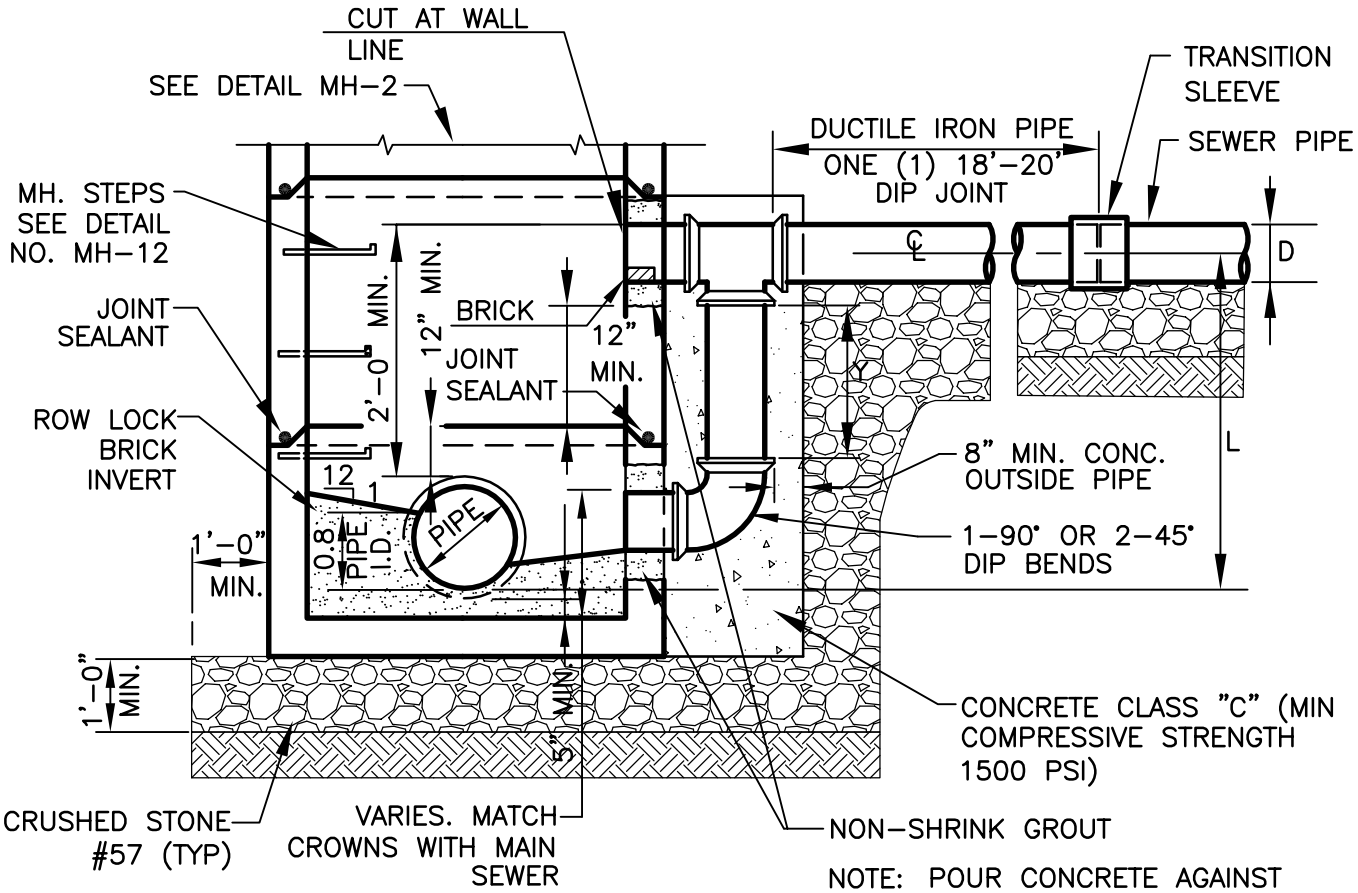

NOTE: POUR CONCRETE AGAINST UNDISTURBED EARTH OR FORM. IF FORMED, FILL VOID UNDER PIPE WITH CRUSHED STONE.

SECTION

THIS DETAIL WAS TAKEN FROM THE CITY OF ATLANTA'S WEBSITE. IT MAY HAVE BEEN MODIFIED AND SHOULD BE REVIEWED THOROUGHLY.

City of Atlanta	STANDARD DETAILS	REV.
		DATE: SEPT 2011
	MANHOLE BASE WITH DROP CONNECTION	ORIG. DATE: NOV 2004
		SCALE: N.T.S.
		DETAIL NO. SG-G_MH005

INCOMING SEWER SIZE, (D)	DROP SIZE REQUIRED, (L)	VERTICLE PIPE RUN, (Y1)	VERTICLE PIPE RUN, (Y2)	VERTICLE PIPE RUN, (Y3)	VERTICLE PIPE RUN, (Y4)
8"	24"	8.5"	N/A	6"	N/A
8"	30"	14.5"	9.5"	12"	7"
12"	36"	15.25"	8.25"	12"	5"
18"	48"	19"	9"	15"	5"
24"	60"	21"	9"	16"	N/A
30"	72"	25"	8.5"	22"	5.5"

THIS DETAIL WAS TAKEN FROM THE CITY OF ATLANTA'S WEBSITE. IT MAY HAVE BEEN MODIFIED AND SHOULD BE REVIEWED THOROUGHLY.

City of Atlanta

STANDARD DETAILS

MANHOLE BASE WITH DROP CONNECTION

REV.
DATE: SEPT 2011
ORIG. DATE: NOV 2004
SCALE: N.T.S.

DETAIL NO. SG-G_MH005.1

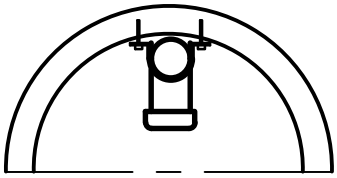

SECTION A–A
CLAMP DETAIL

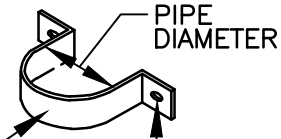

STRAP DETAIL

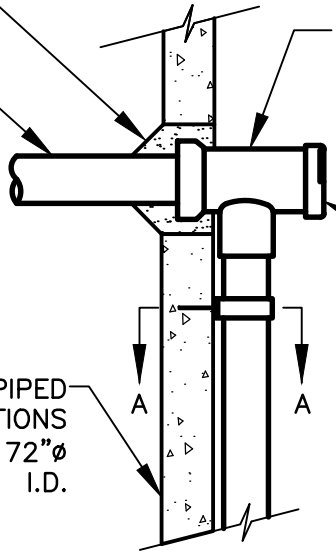

DAM FABRICATED FROM SCHEDULE 80 PVC PIPE CAP. USE ON RUNS > 15% SLOPE. REMOVE UPPER HALF CIRCLE.

STAINLESS STEEL SHEET METAL SCREWS, ONE EACH SIDE (2) IN LOWER HALF. HALF CIRCLE.

MANHOLES WITH PIPED INSIDE DROP CONNECTIONS SHALL BE MINIMUM 72"ø I.D.

ANCHOR TO WALL WITH GRADE 316 STAINLESS STEEL RISER CLAMP OR 316 STAINLESS STEEL BAND AND STAINLESS STEEL EXPANSION ANCHORS MIN. 2 PLACES. MAX. SPACING OF CLAMPS SHALL BE 4' MIN. WITH 1 AT TOP AND 1 AT BOTTOM

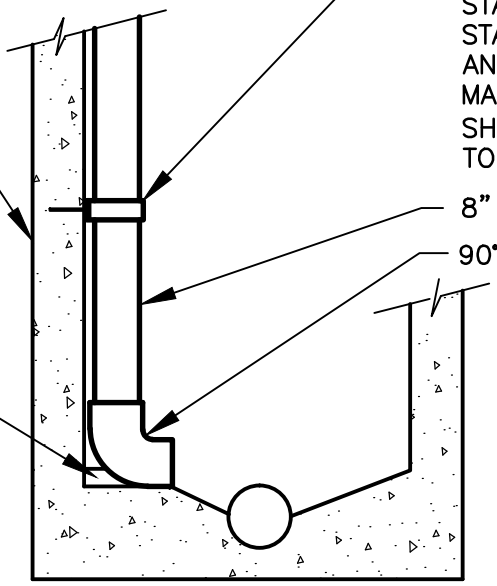

8" SCHEDULE 80 PVC DROP PIPE

90°PS SCHEDULE 80 PVC BEND

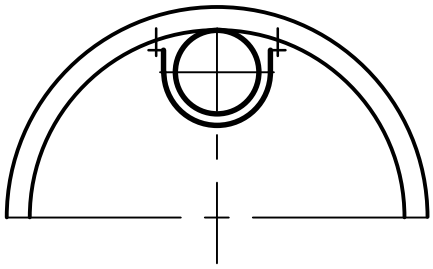

SECTION A–A
CLAMP DETAIL

NOTE:
USE ONLY WHEN CONNECTING WITH 8"ø SANITARY SEWER

THIS DETAIL WAS TAKEN FROM THE CITY OF ATLANTA'S WEBSITE. IT MAY HAVE BEEN MODIFIED AND SHOULD BE REVIEWED THOROUGHLY.

City of Atlanta	STANDARD DETAILS	REV. DATE: SEPT 2011 ORIG. DATE: NOV 2004 SCALE: N.T.S.
	PIPED INSIDE DROP CONNECTION FOR MANHOLES	DETAIL NO. SG–G_MH006

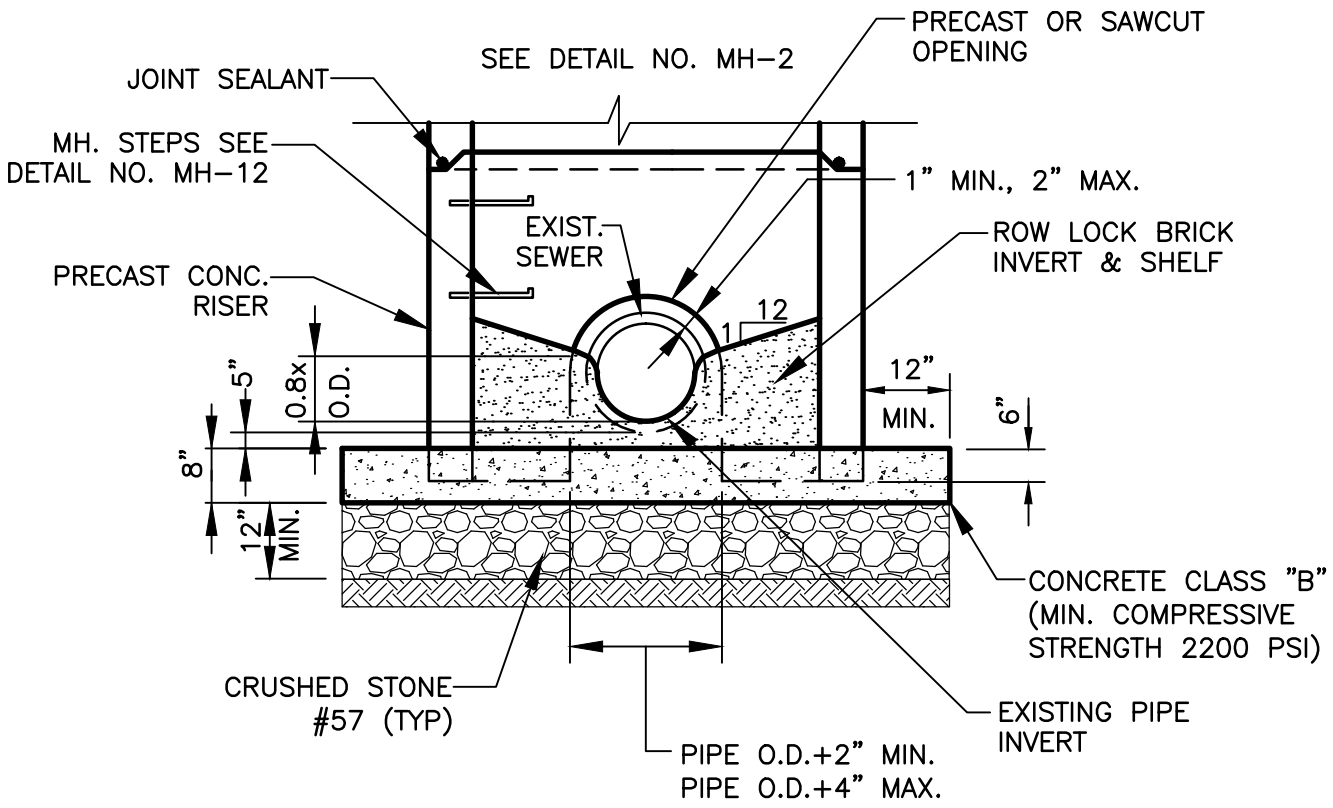

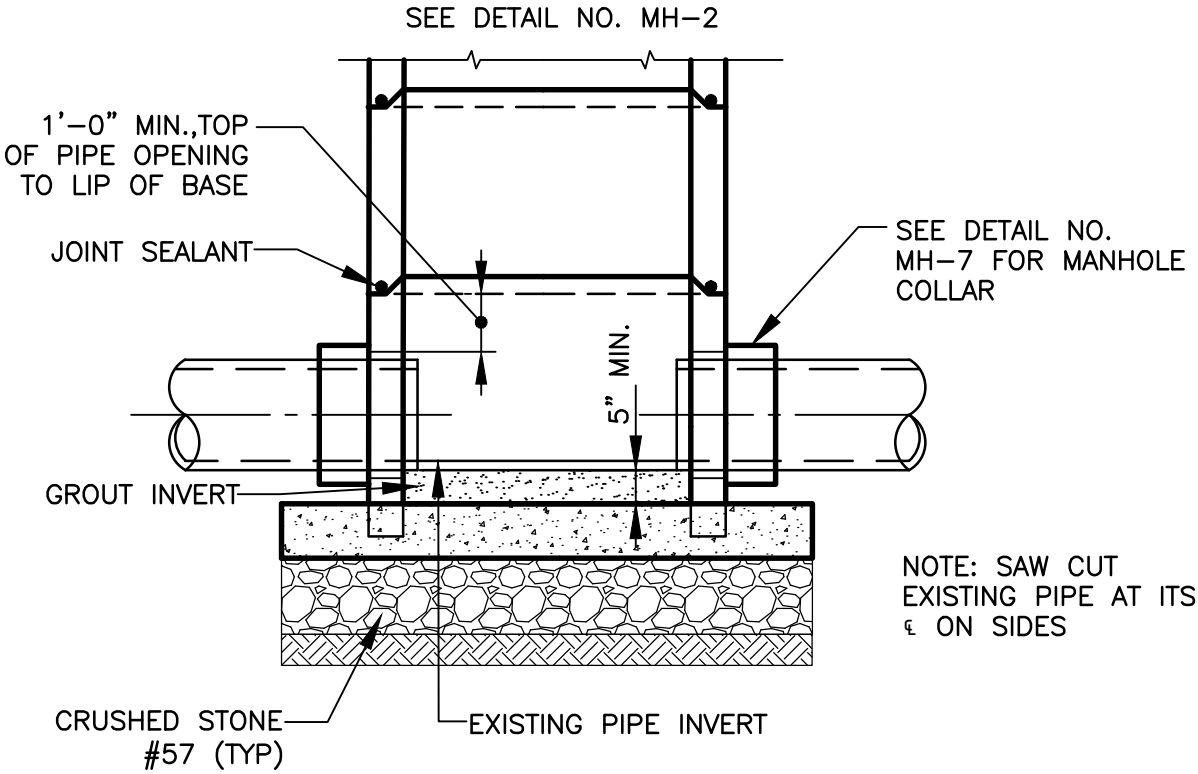

THIS DETAIL WAS TAKEN FROM THE CITY OF ATLANTA'S WEBSITE. IT MAY HAVE BEEN MODIFIED AND SHOULD BE REVIEWED THOROUGHLY.

City of Atlanta	STANDARD DETAILS	REV. DATE: SEPT 2011 ORIG. DATE: NOV 2004 SCALE: N.T.S.
	MANHOLE OVER EXISTING SEWER	DETAIL NO. SG–G_MH007

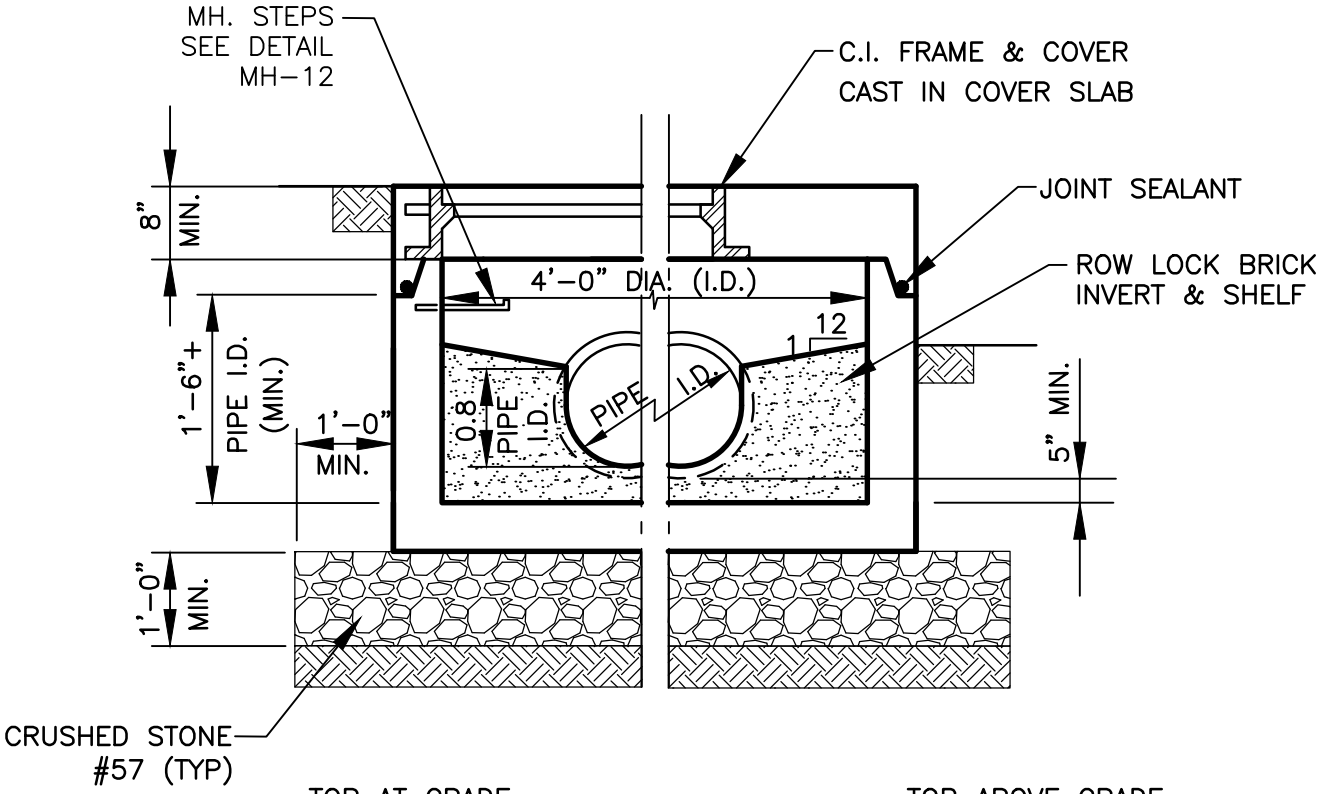

TOP AT GRADE

TOP ABOVE GRADE

NOTE:
SPECIAL FLANGE REQ'D ON FRAME WHERE FLUSH WITH GRADE.

THIS DETAIL WAS TAKEN FROM THE CITY OF ATLANTA'S WEBSITE. IT MAY HAVE BEEN MODIFIED AND SHOULD BE REVIEWED THOROUGHLY.

City of Atlanta	STANDARD DETAILS	REV. DATE: SEPT 2011 ORIG. DATE: NOV 2004 SCALE: N.T.S.
	SHALLOW MANHOLE	DETAIL NO. SG–G_MH008

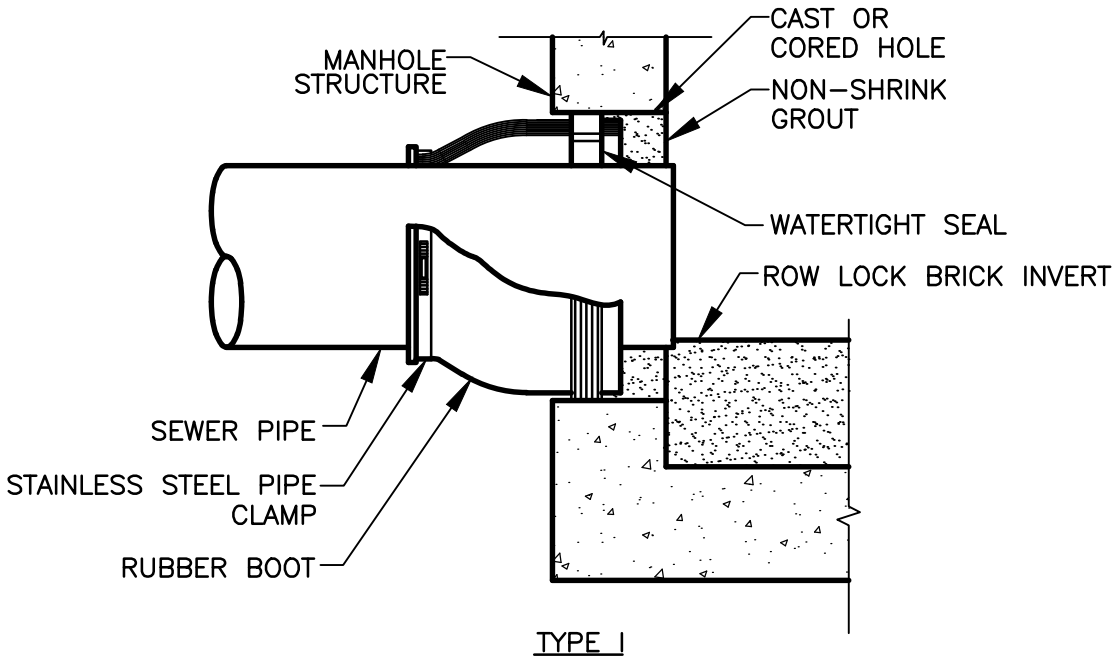

TYPE I

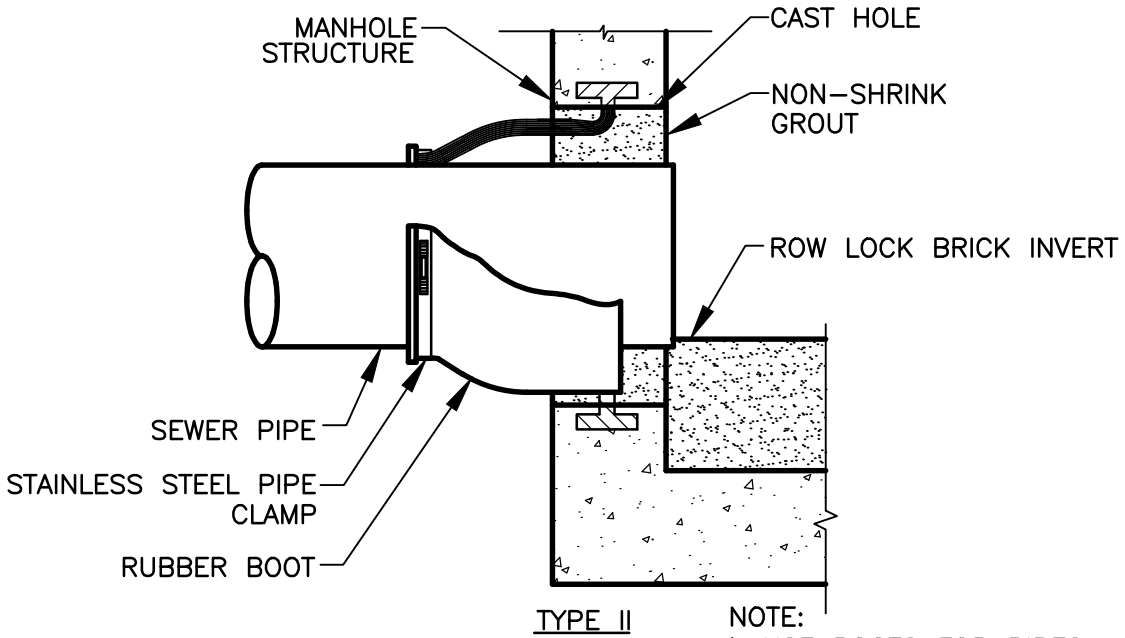

TYPE II

NOTE:
1. USE BOOTS FOR PIPES <
2. 42" DIAMETER
TYPE I IS FOR MECHANICALLY
3. ATTACHED TYPE BOOTS.
TYPE II IS FOR CAST-IN BOOTS

THIS DETAIL WAS TAKEN FROM THE CITY OF ATLANTA'S WEBSITE. IT MAY HAVE BEEN MODIFIED AND SHOULD BE REVIEWED THOROUGHLY.

City of Atlanta	STANDARD DETAILS	REV. DATE: SEPT 2011 ORIG. DATE: NOV 2004 SCALE: N.T.S.
	BOOT CONNECTION	DETAIL NO. SS-G_BC001

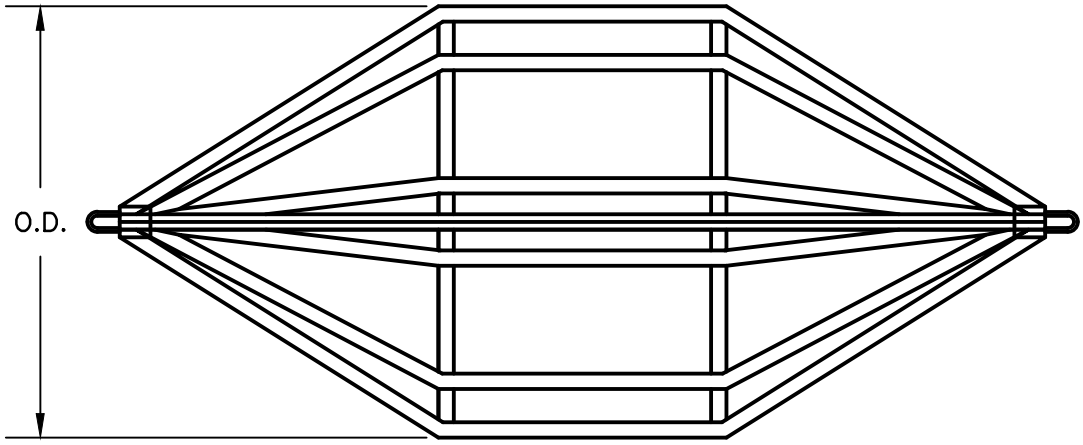

SIDE OR TOP VIEW

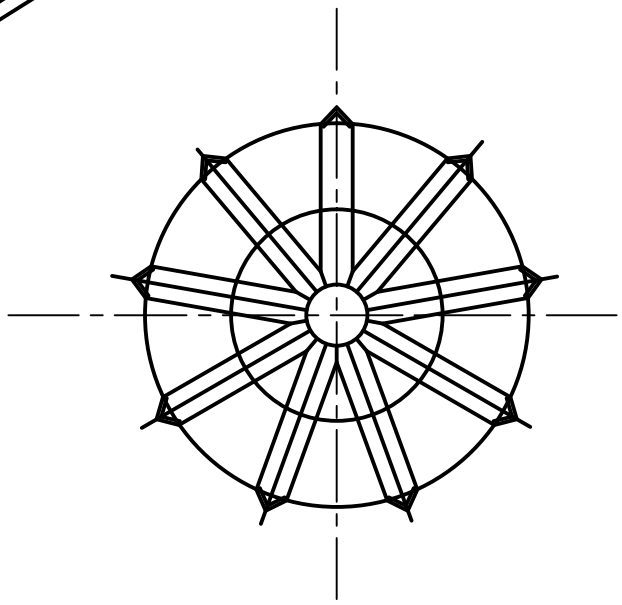

END VIEW

MINIMUM MANDREL DIAMETER			
SEWER SIZE	ASTM D3034 SDR35	ASTM F679 T–1	ASTM F794 SERIES 46
8	7.52	N/A	7.52
10	9.41	N/A	9.41
12	11.19	N/A	11.18
15	13.70	N/A	13.70
18	N/A	16.75	16.82
21	N/A	19.74	19.77
24	N/A	22.21	22.39

BASED ON 5 % DEFLECTION OF MAXIMUM POSSIBLE INSIDE DIAMETER

THIS DETAIL WAS TAKEN FROM THE CITY OF ATLANTA'S WEBSITE. IT MAY HAVE BEEN MODIFIED AND SHOULD BE REVIEWED THOROUGHLY.

City of Atlanta

STANDARD DETAILS

DELFECTION TEST MANDREL

REV.
DATE: OCT. 2011
ORIG. DATE: NOV 2004
SCALE: N.T.S.

DETAIL NO. SS–G_DM001

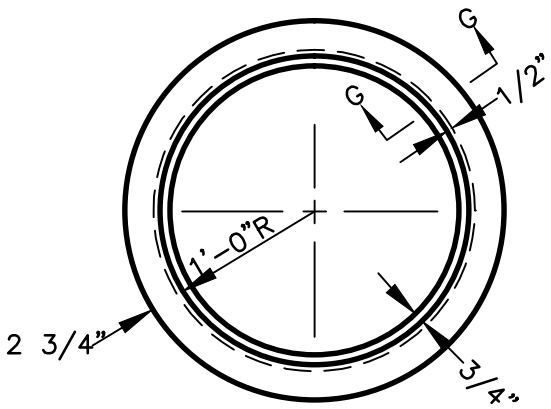

FRAME

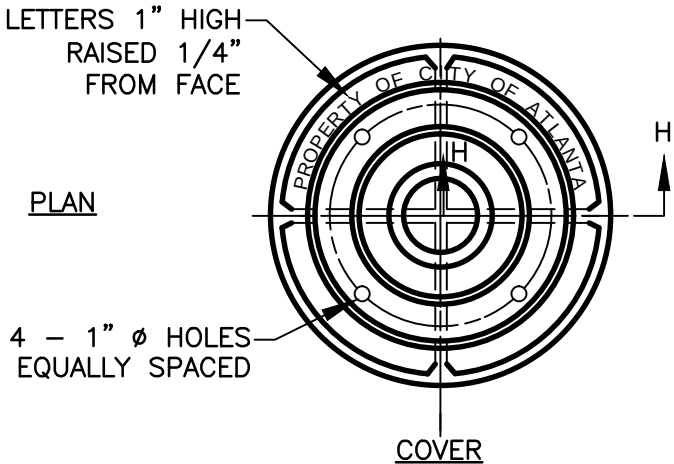

PLAN

COVER

ELEVATION

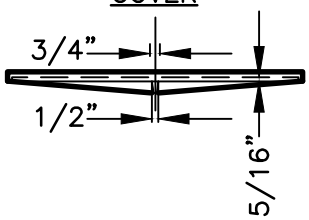

NOTE:
(1) RIM AND COVER TO BE GRAY IRON CASTING ACCORDING TO ASTM SPECIFICATION NO. A–48–30.
(2) RIM AND COVER MUST BE FITTED BEFORE LEAVING SHOP.

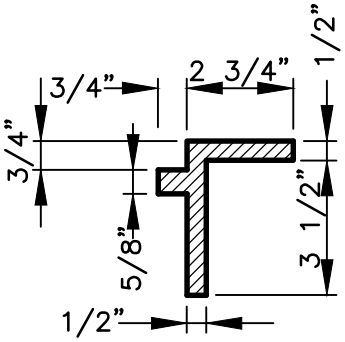

SECTION G–G

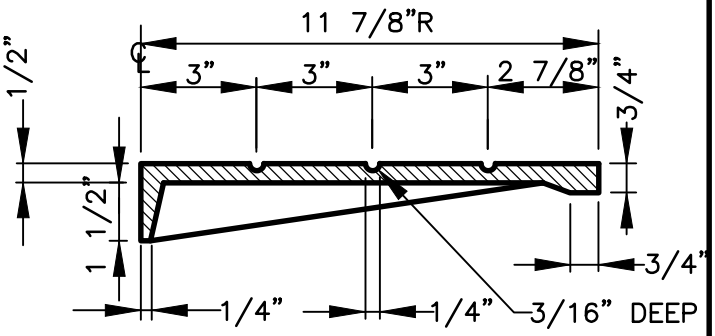

SECTION H–H

THIS DETAIL WAS TAKEN FROM THE CITY OF ATLANTA'S WEBSITE. IT MAY HAVE BEEN MODIFIED AND SHOULD BE REVIEWED THOROUGHLY.

City of Atlanta	STANDARD DETAILS	REV. DATE: SEPT 2011 ORIG. DATE: NOV 2004 SCALE: N.T.S.
	LIGHT CASTING FRAME AND COVER FOR PRECAST SLABS	DETAIL NO. SS–G_FC001

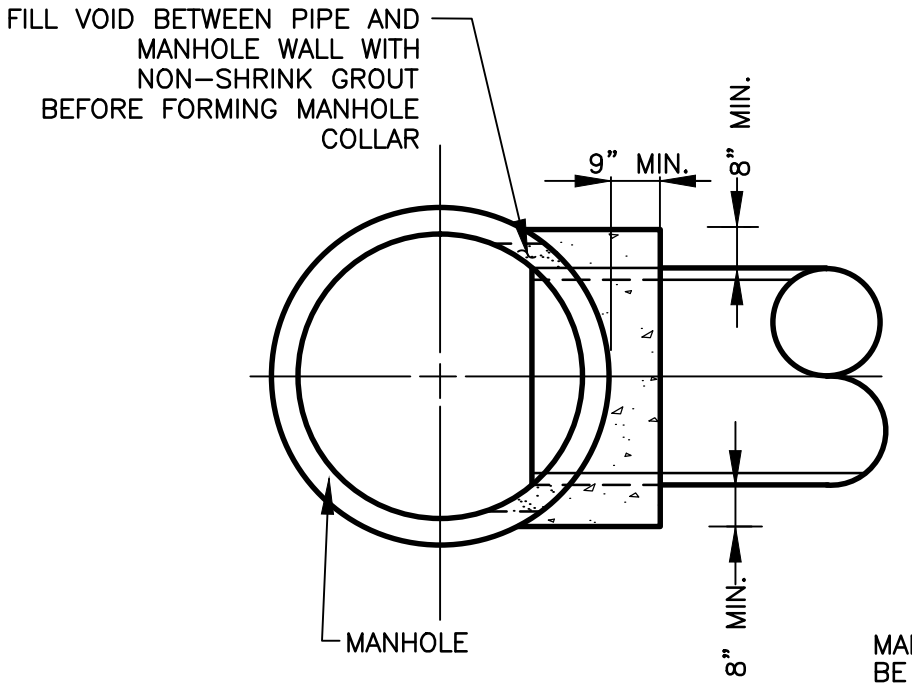

PLAN

MANHOLE COLLARS SHALL BE USED FOR SEWER CONNECTIONS TO MANHOLES :

1.) IF EXIST. MANHOLE IS BRICK
2.) IF SEWER > 42" ø
3.) IF MANHOLE IS CONSTRUCTED OVER EXIST. SEWER
4.) TO REPAIR TYPE II BOOT CONNECTION

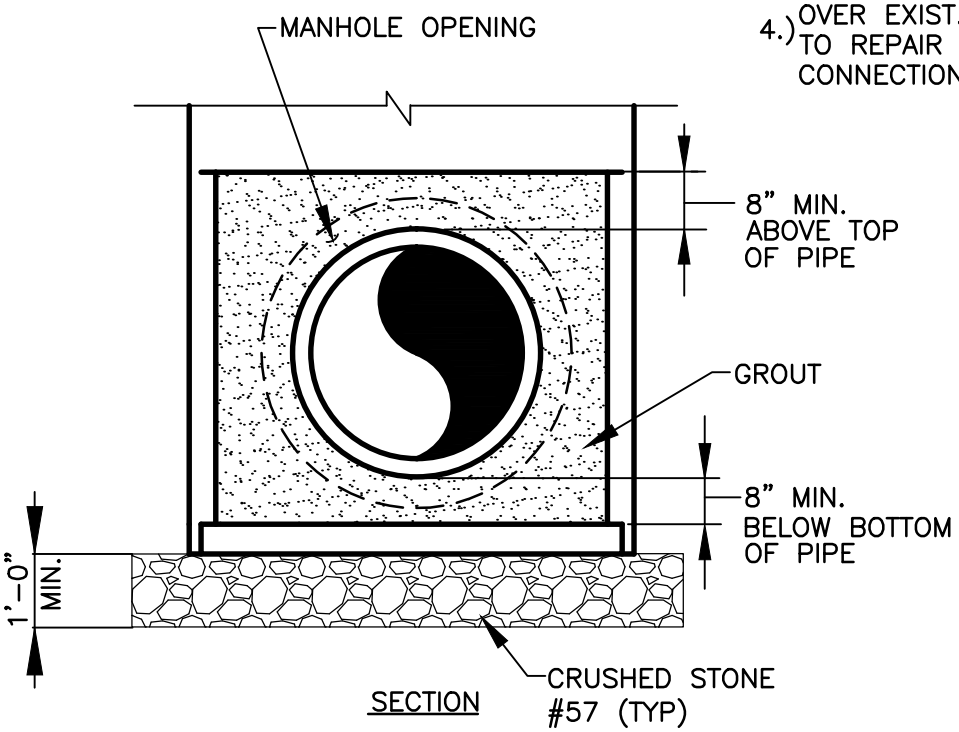

SECTION

THIS DETAIL WAS TAKEN FROM THE CITY OF ATLANTA'S WEBSITE. IT MAY HAVE BEEN MODIFIED AND SHOULD BE REVIEWED THOROUGHLY.

City of Atlanta	STANDARD DETAILS	REV.
		DATE: SEPT 2011
	MANHOLE COLLAR	ORIG. DATE: NOV 2004
		SCALE: N.T.S.
		DETAIL NO. SS-G_MC001

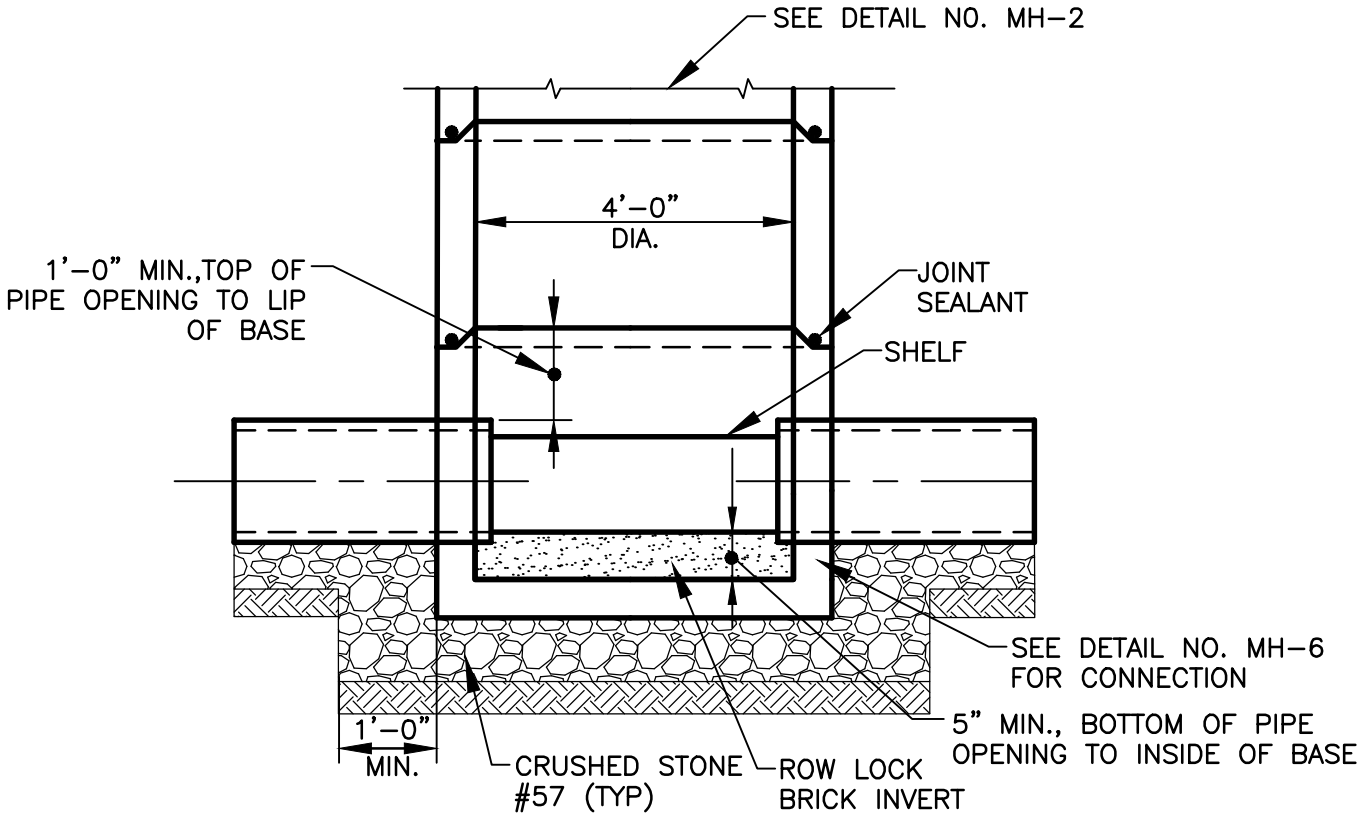

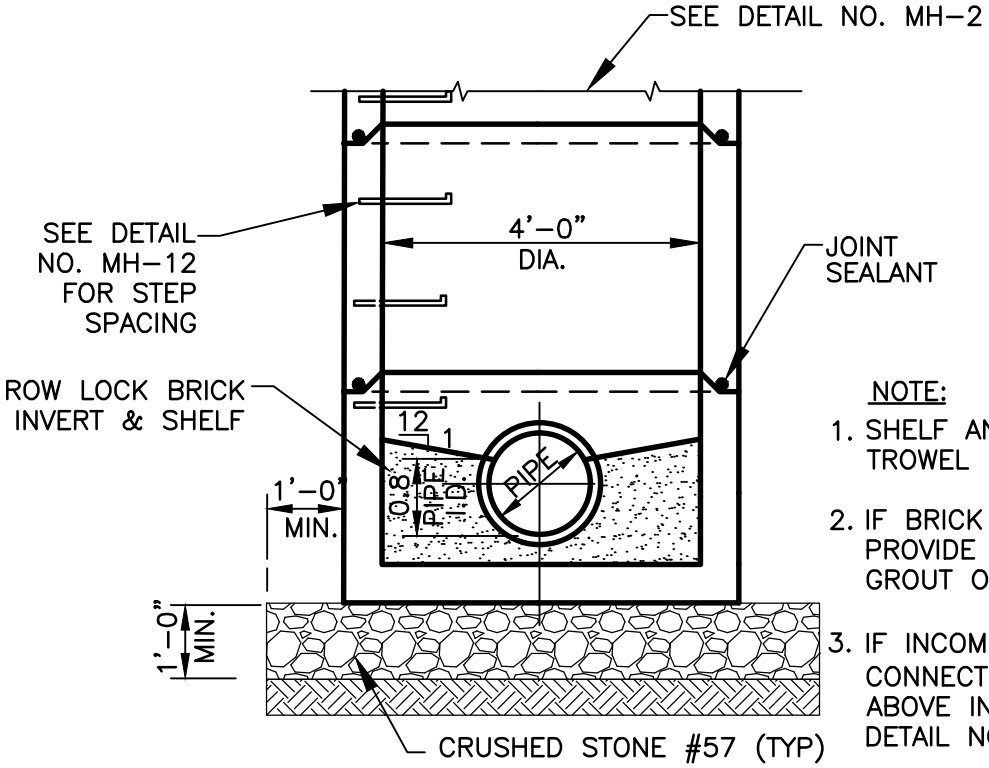

NOTE:

1. SHELF AND INVERT SHALL BE TROWEL FINISHED
2. IF BRICK USED AS FILLER, PROVIDE MINIMUM 2 INCHES GROUT OVER BRICK
3. IF INCOMING SEWER(S) CONNECTION(S) ARE 2-FEET ABOVE INVERT OUT USE DETAIL NO. MH-9 OR MH-9A

THIS DETAIL WAS TAKEN FROM THE CITY OF ATLANTA'S WEBSITE. IT MAY HAVE BEEN MODIFIED AND SHOULD BE REVIEWED THOROUGHLY.

City of Atlanta	STANDARD DETAILS	REV.
		DATE: SEPT 2011
		ORIG. DATE: NOV 2004
	MANHOLE BASE	SCALE: N.T.S.
		DETAIL NO. SS-G_MH001

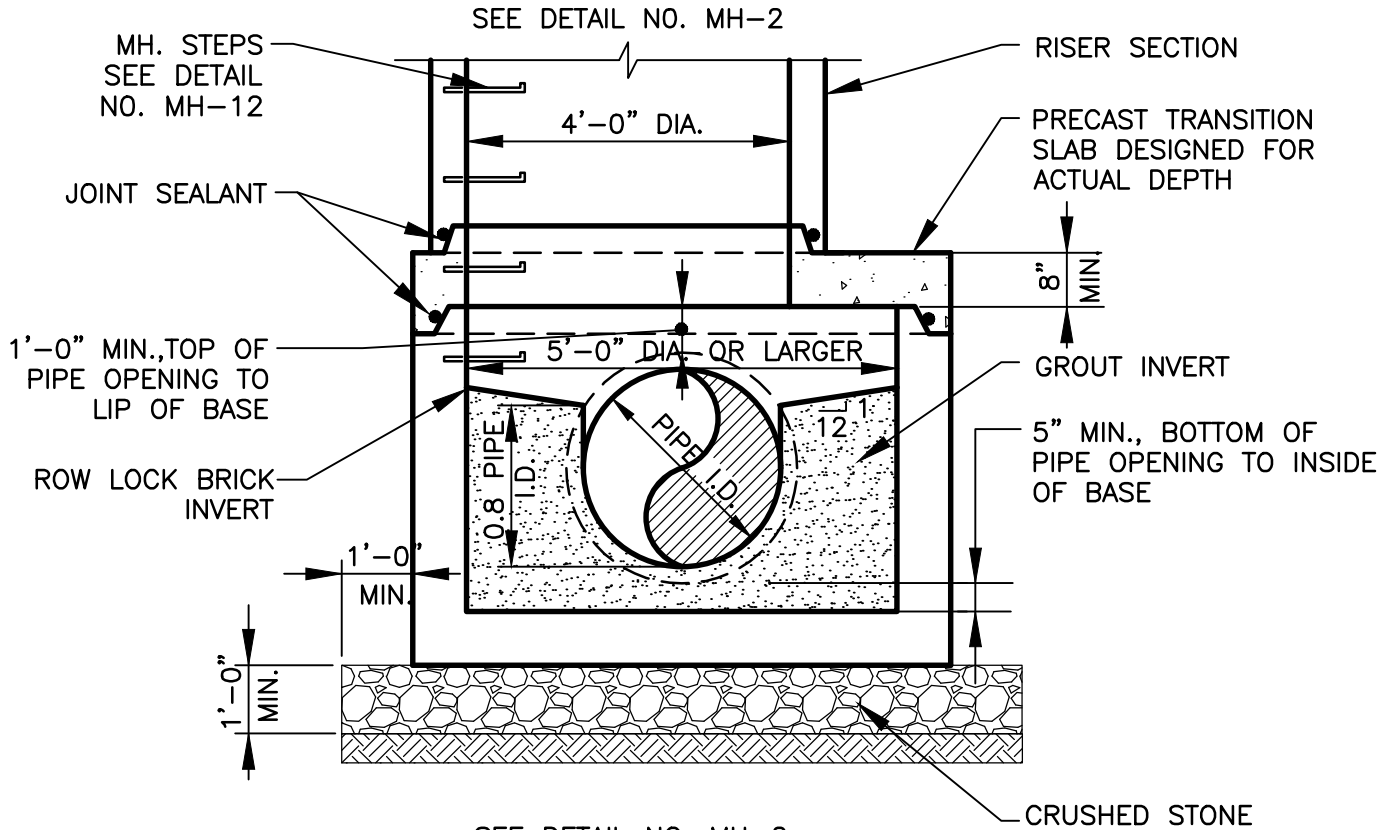

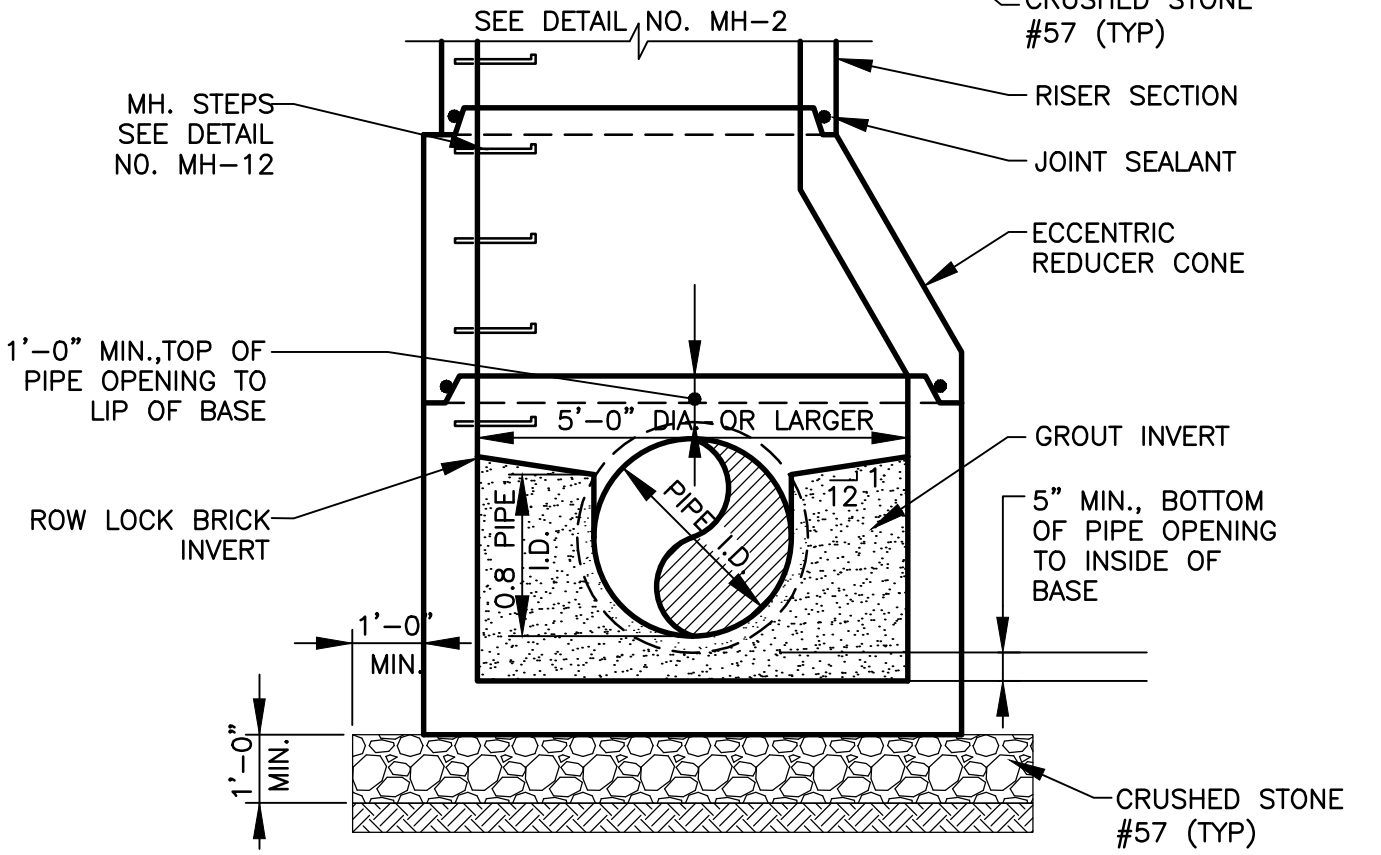

THIS DETAIL WAS TAKEN FROM THE CITY OF ATLANTA'S WEBSITE. IT MAY HAVE BEEN MODIFIED AND SHOULD BE REVIEWED THOROUGHLY.

City of Atlanta	STANDARD DETAILS	REV. DATE: SEPT 2011 ORIG. DATE: NOV 2004 SCALE: N.T.S.
	LARGE DIAMETER MANHOLE BASE	DETAIL NO. SS–G_MH004

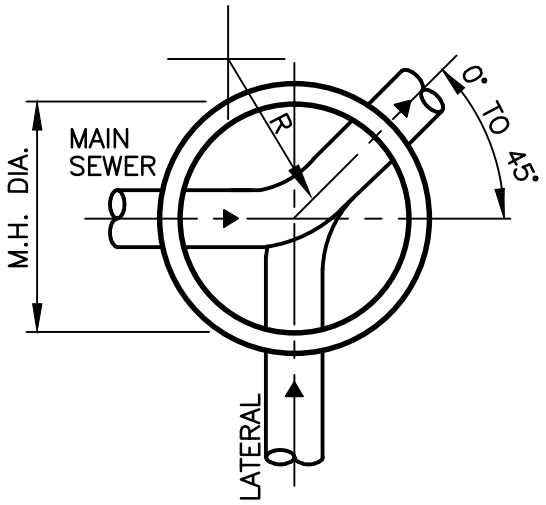

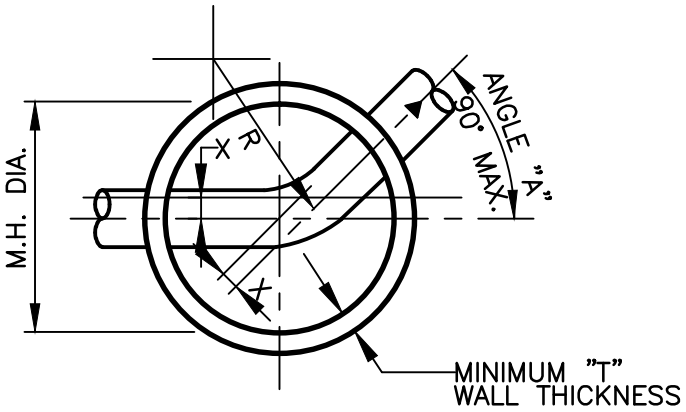

STANDARD MANHOLE SCHEDULE OF GOVERNING DIMENSIONS				
PIPE SIZE	ANGLE "A"	MH. DIA.	"T"	"X"
8" TO 15"	0° TO 90°	4'–0"	5"	0"
18" TO 24"	0° TO 60°	4'–0"	5"	0"
18" TO 24"	60° TO 90°	5'–0"	6"	6"
27" TO 30"	0° TO 30°	5'–0"	6"	0"
27" TO 30"	30° TO 60°	5'–0"	6"	6"
27" TO 30"	60° TO 90°	6'–0"	7"	8"
36"	0° TO 90°	6'–0"	7"	0"
42"	0° TO 60°	7'–0"	8"	8"
42"	60° TO 90°	8'–0"	9"	6"
48"	0° TO 45°	8'–0"	9"	6"
48"	60° TO 90°	12'–0"	13"	6"
54"	0° TO 60°	8'–0"	9"	6"
54"	60° TO 90°	12'–0"	13"	6"
60"	0° TO 30°	8'–0"	9"	0"
60"	30° TO 45°	8'–0"	9"	6"
60"	45° TO 60°	10'–0"	11"	6"
60"	60° TO 90°	12'–0"	13"	8"

NOTE:
MINIMUM ℄ RADIUS (R) OF M.H. INVERT = 1.5 x PIPE DIAMETER

City of Atlanta

STANDARD DETAILS

MANHOLE
PLAN AND DIAMETERS

REV.
DATE: SEPT 2011
ORIG. DATE: JAN 1997
SCALE: N.T.S.

DETAIL NO. SS–G_MH009

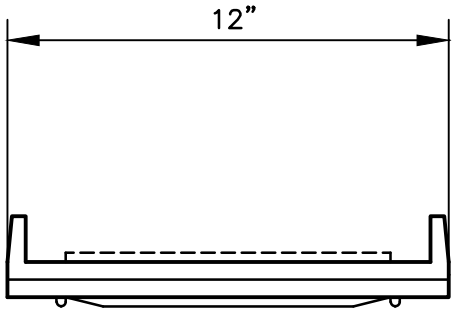

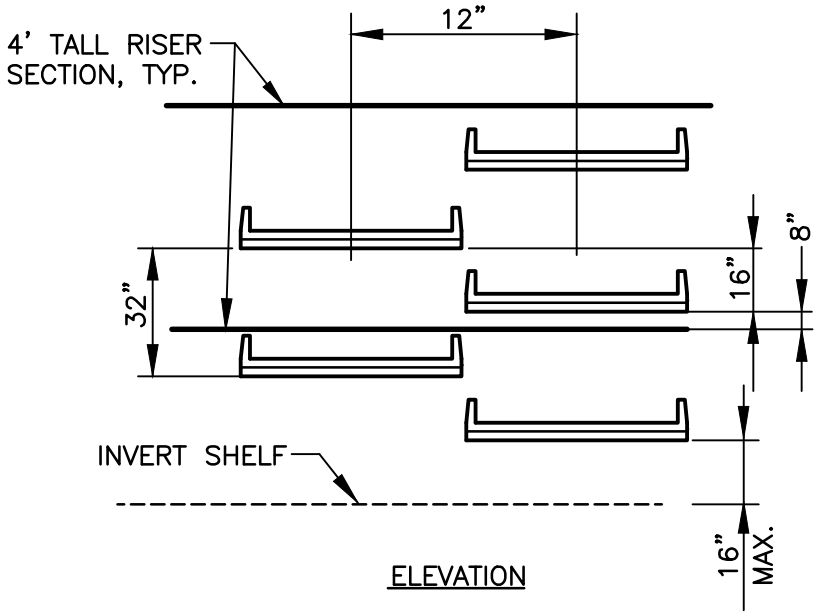

ELEVATION

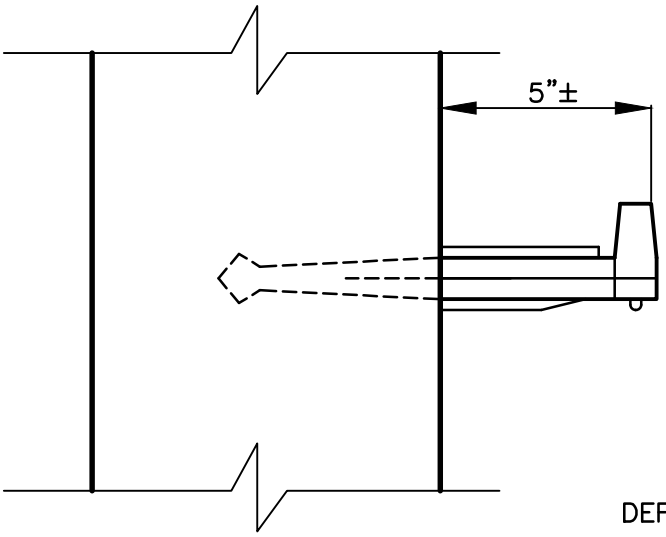

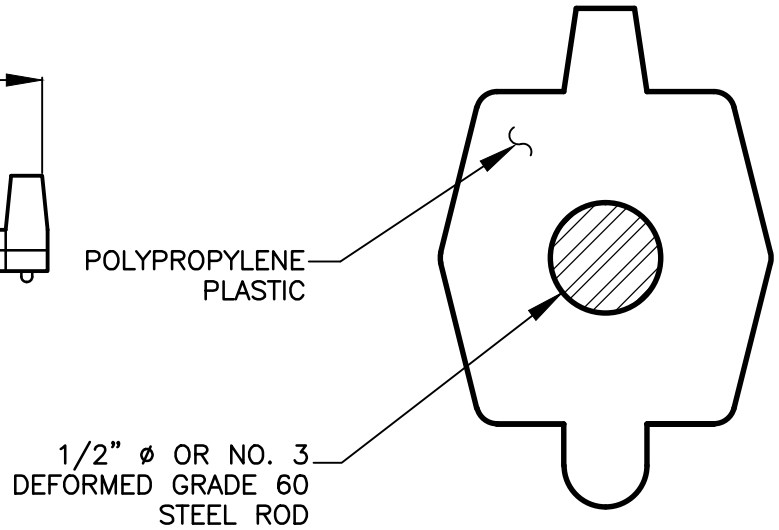

SECTION

STEPS SHALL BE PLACED INTO WET CONCRETE WALL DURING MANUFACTURE OR MORTORED INTO HOLES AFTER CONCRETE HAS SET.

THIS DETAIL WAS TAKEN FROM THE CITY OF ATLANTA'S WEBSITE. IT MAY HAVE BEEN MODIFIED AND SHOULD BE REVIEWED THOROUGHLY.

City of Atlanta	STANDARD DETAILS	REV. DATE: SEPT 2011 ORIG. DATE: NOV 2004 SCALE: N.T.S.
	MANHOLE STEPS	DETAIL NO. SS-G_MS001

NOTES:

1. CONNECTION TO NEW SEWER SHALL BE WITH TEE OR WYE.
2. NO TEES OR WYES ON RCP OR DIP SEWERS LARGER THAN 12"ø.
3. VCP USE WYES ONLY
4. FOR LARGER DIAMETER CONNECTIONS SEE DETAIL SS-2.

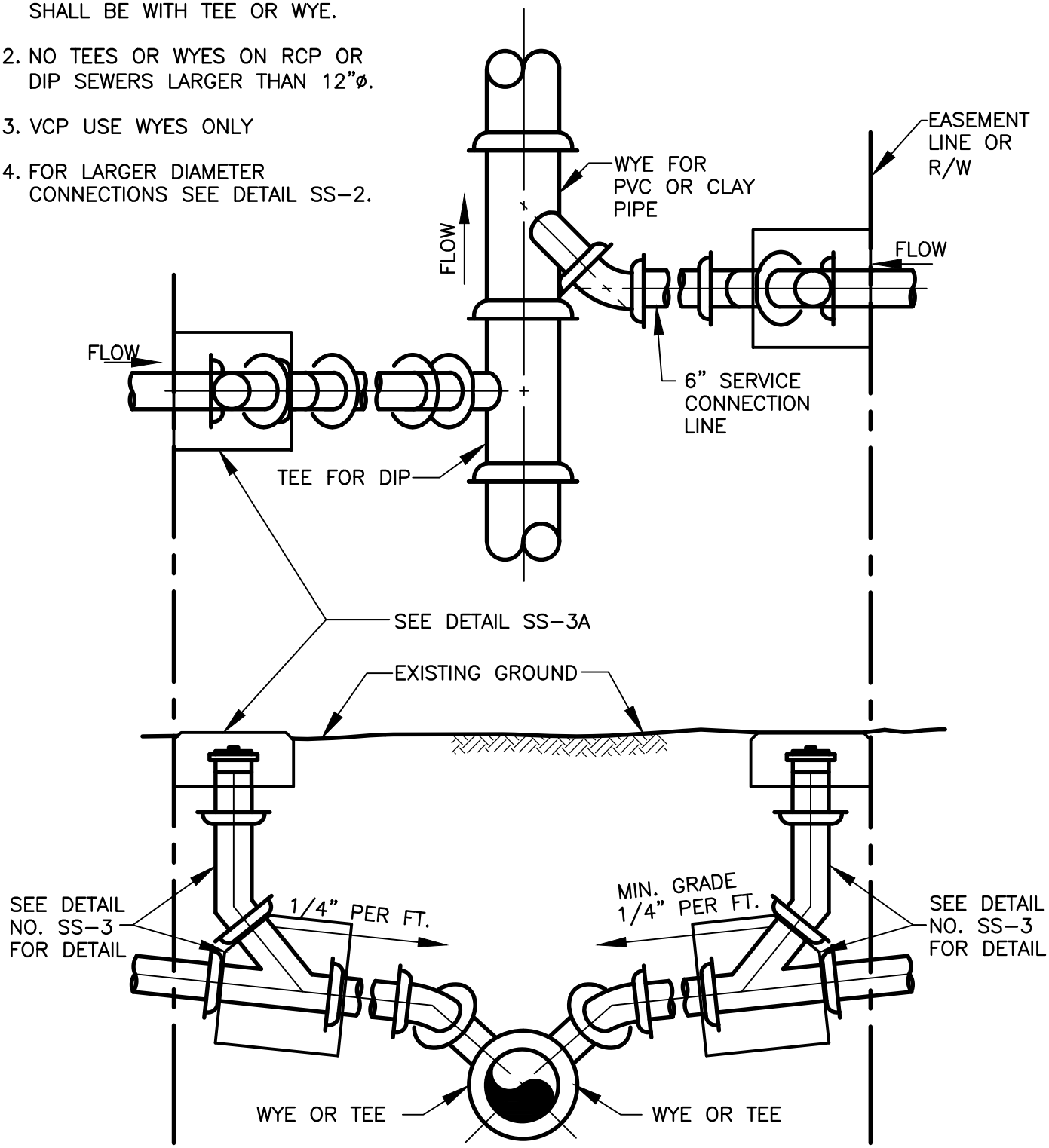

THIS DETAIL WAS TAKEN FROM THE CITY OF ATLANTA'S WEBSITE. IT MAY HAVE BEEN MODIFIED AND SHOULD BE REVIEWED THOROUGHLY.

City of Atlanta	STANDARD DETAILS	REV.
		DATE: OCT. 2011
		ORIG. DATE: NOV 2004
	SERVICE CONNECTION ON NEW SEWERS	SCALE: N.T.S.
		DETAIL NO. SS-G_SC001

NOTES:

1. CONNECTION TO NEW SEWER SHALL BE WITH TEE OR WYE.
2. NO TEES OR WYES ON RCP OR DIP SEWERS LARGER THAN 12"ø.
3. VCP USE WYES ONLY
4. FOR LARGER DIAMETER CONNECTIONS SEE DETAIL SS-2.

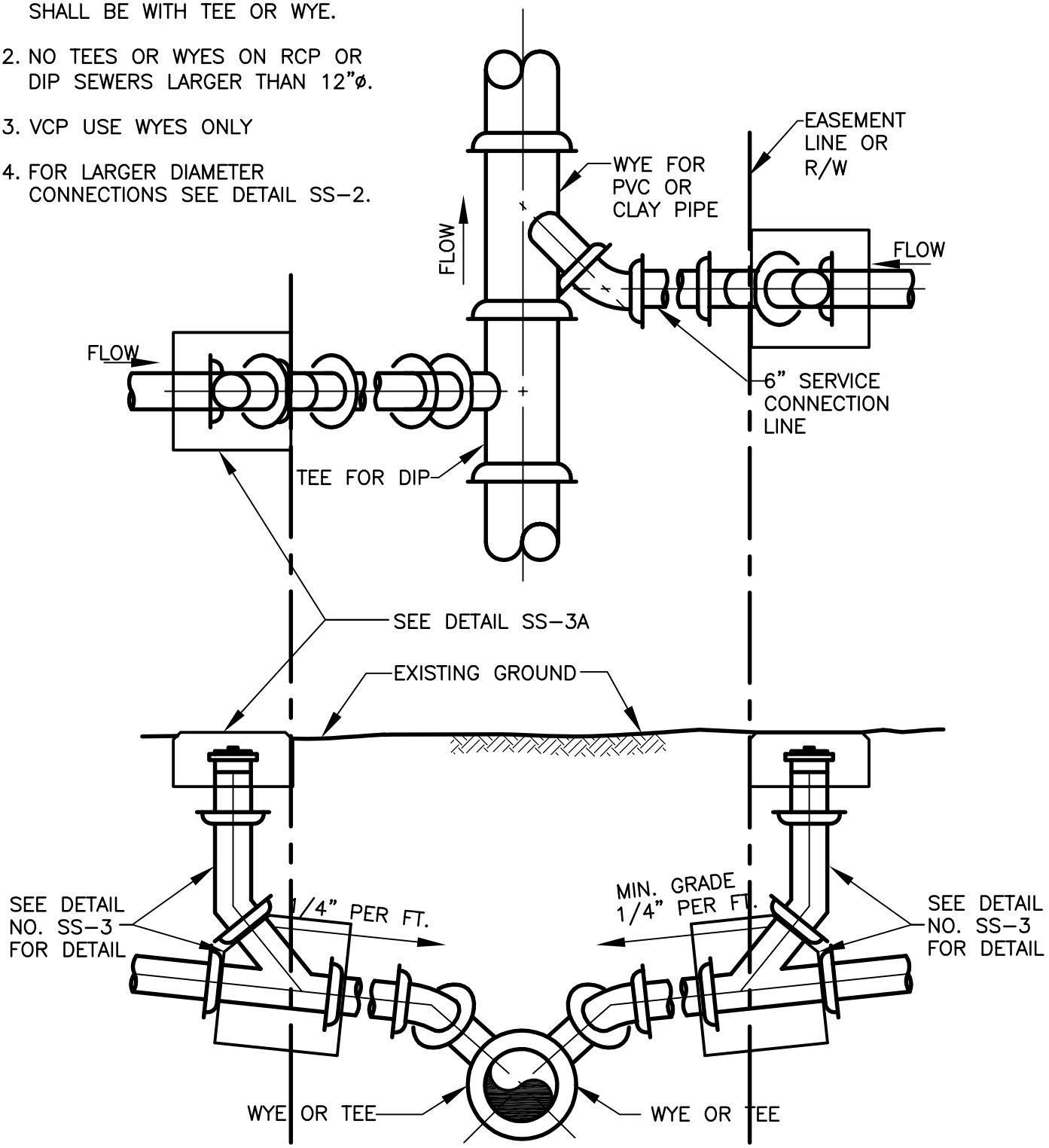

THIS DETAIL WAS TAKEN FROM THE CITY OF ATLANTA'S WEBSITE. IT MAY HAVE BEEN MODIFIED AND SHOULD BE REVIEWED THOROUGHLY.

City of Atlanta	STANDARD DETAILS	REV.
		DATE: OCT. 2011
	SERVICE CONNECTION ON NEW SEWERS	ORIG. DATE: NOV 2004
		SCALE: N.T.S.
		DETAIL NO. SS-G_SC001

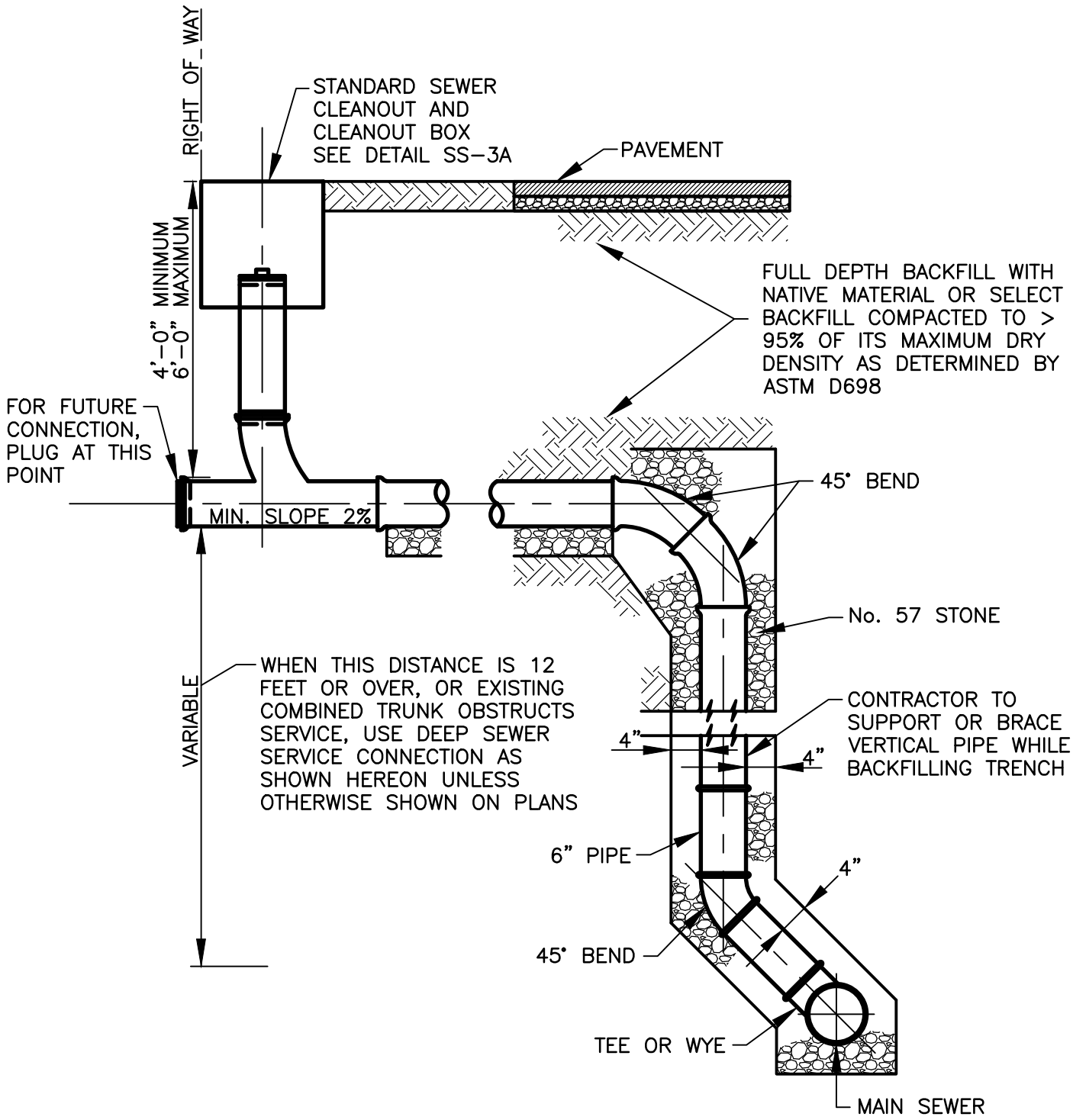

THIS DETAIL WAS TAKEN FROM THE CITY OF ATLANTA'S WEBSITE. IT MAY HAVE BEEN MODIFIED AND SHOULD BE REVIEWED THOROUGHLY.

City of Atlanta	STANDARD DETAILS	REV. DATE: OCT. 2011 ORIG. DATE: NOV 2004 SCALE: N.T.S.
	DEEP SEWER CONNECTION	DETAIL NO. SS-G_SC002

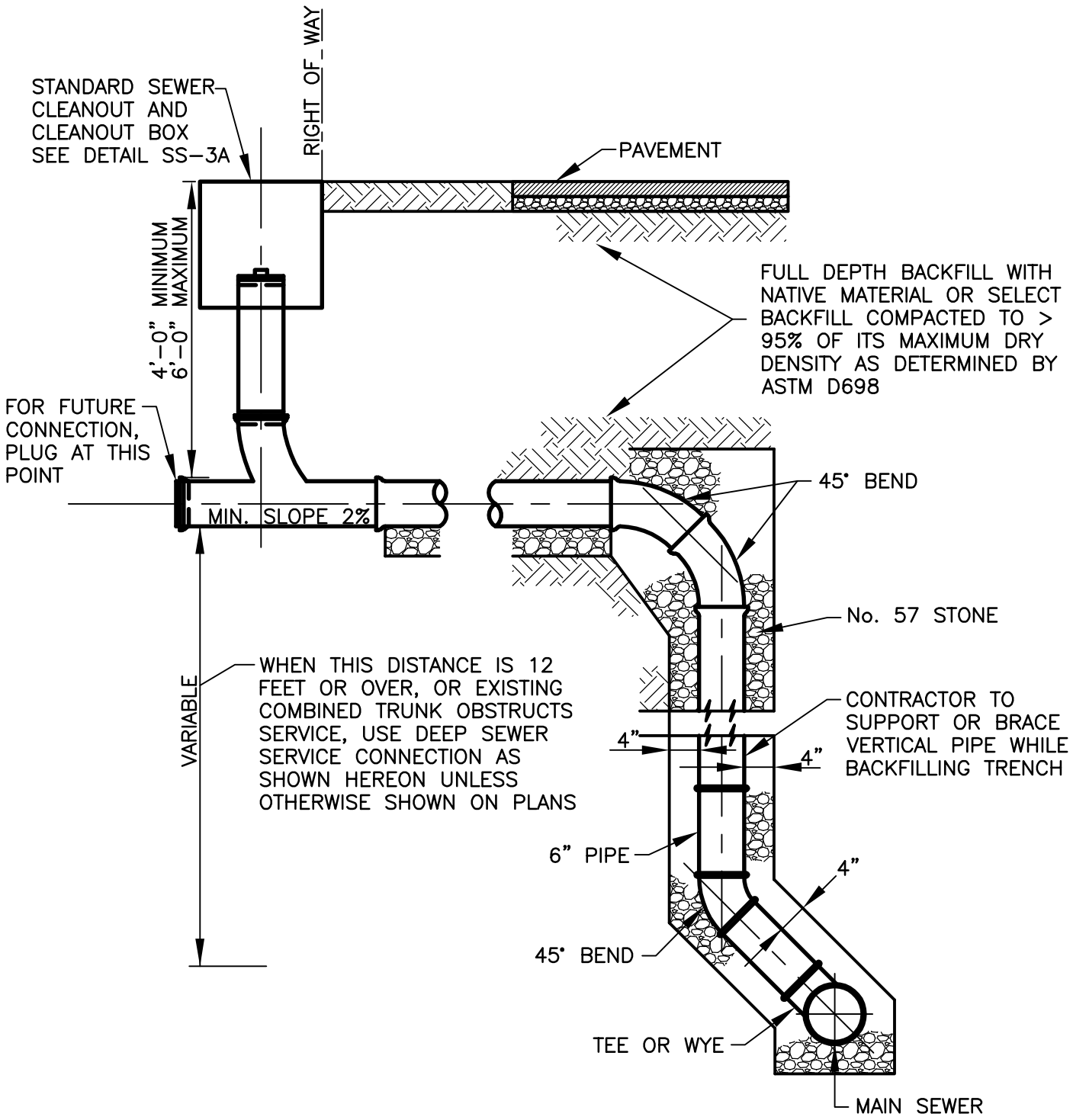

THIS DETAIL WAS TAKEN FROM THE CITY OF ATLANTA'S WEBSITE. IT MAY HAVE BEEN MODIFIED AND SHOULD BE REVIEWED THOROUGHLY.

City of Atlanta	STANDARD DETAILS	REV.
		DATE: OCT. 2011
		ORIG. DATE: NOV 2004
	DEEP SEWER CONNECTION	SCALE: N.T.S.
		DETAIL NO. SS-G_SC002

NOTE: 1.) HOLE IN EXISTING SEWER SHALL BE CORED.
2.) CONNECT SERVICE TO SEWER WITH:
- BOOT ON RCP SEWERS
- TAPPING SADDLE ON DIP SEWERS EQUAL TO AMERICAN OUTLET / TAPPING SADDLE WITH MECHANICAL JOINT OUTLET AND MINIMUM 3 STRAPS FOR SECURING
- TIGHTLY PACKED NON-SHRINK GROUT ON BRICK SEWERS
- BOOT OR TIGHTLY PACKED NON-SHRINK GROUT ON VCP SEWERS
- MANUFACTURED SADDLE ON PVC PIPE SEWERS

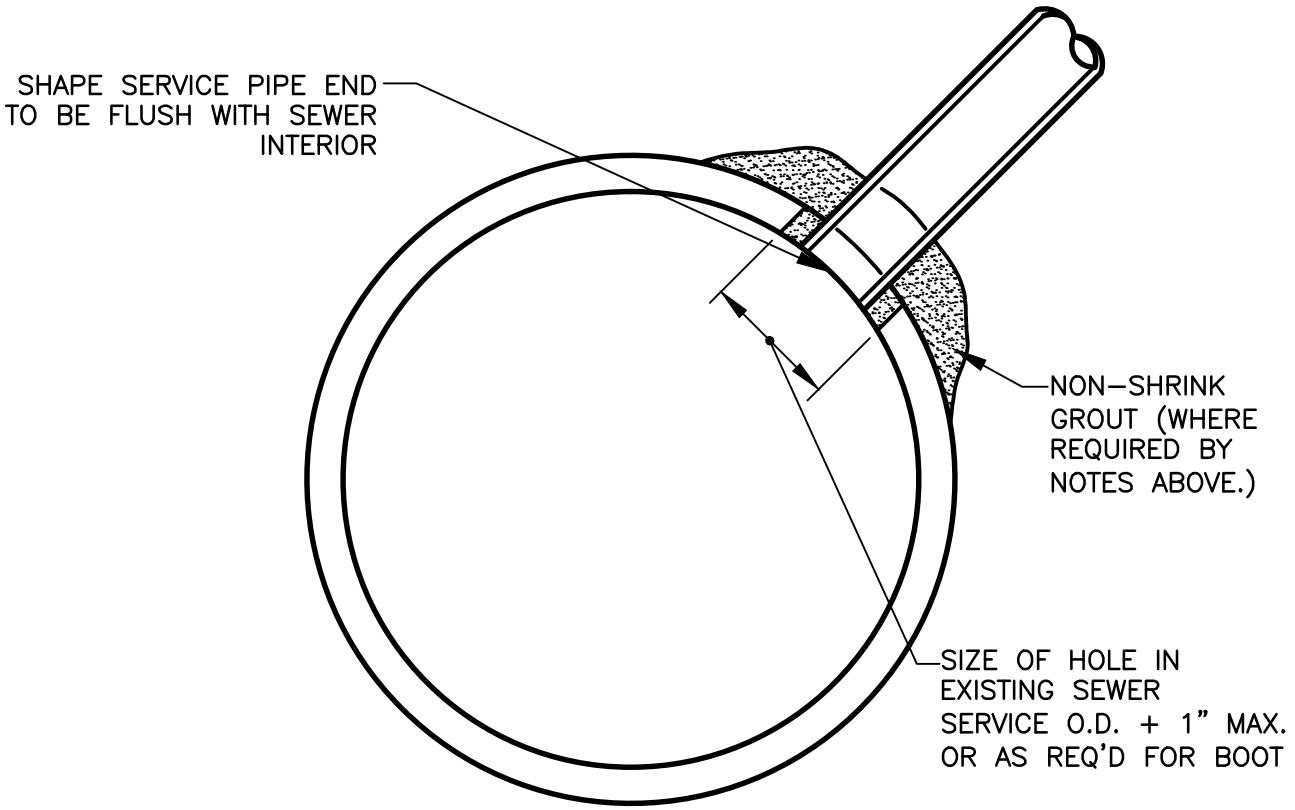

THIS DETAIL WAS TAKEN FROM THE CITY OF ATLANTA'S WEBSITE. IT MAY HAVE BEEN MODIFIED AND SHOULD BE REVIEWED THOROUGHLY.

City of Atlanta	STANDARD DETAILS	REV. DATE: OCT. 2011 ORIG. DATE: NOV 2004 SCALE: N.T.S.
	SERVICE CONNECTION	DETAIL NO. SS-G_SC003

NOTE: TOP OF CLEANOUT BOX SHALL BE FLUSH WITH FINAL SURFACE IN SIDEWALKS AND PAVED AREAS

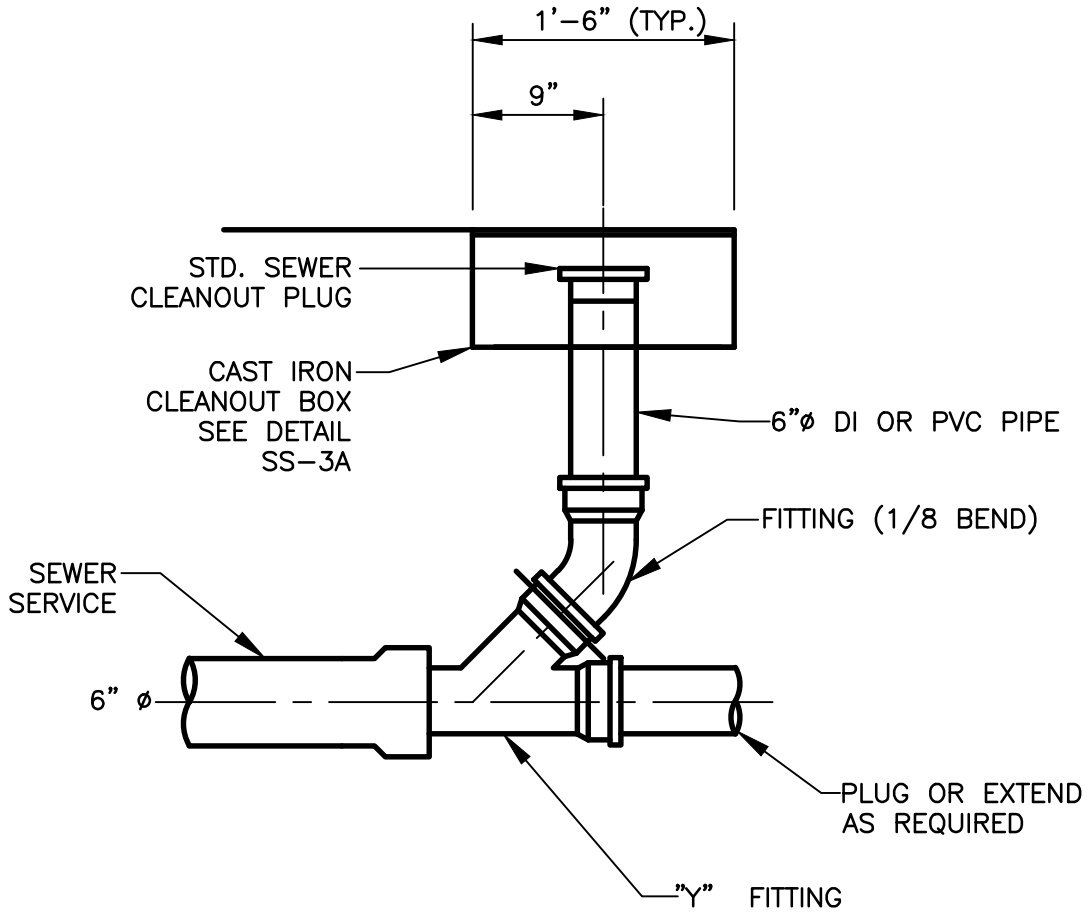

THIS DETAIL WAS TAKEN FROM THE CITY OF ATLANTA'S WEBSITE. IT MAY HAVE BEEN MODIFIED AND SHOULD BE REVIEWED THOROUGHLY.

City of Atlanta	STANDARD DETAILS	REV. DATE: OCT. 2011 ORIG. DATE: NOV 2004 SCALE: N.T.S.
	SERVICE CONNECTION CLEANOUT	DETAIL NO. SS-G_SC004

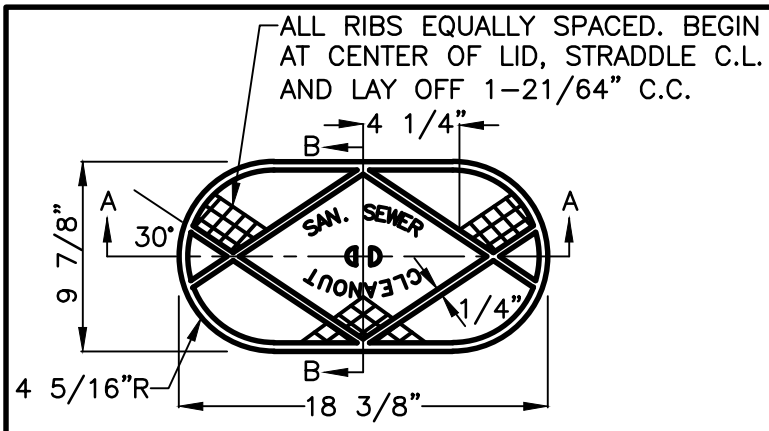

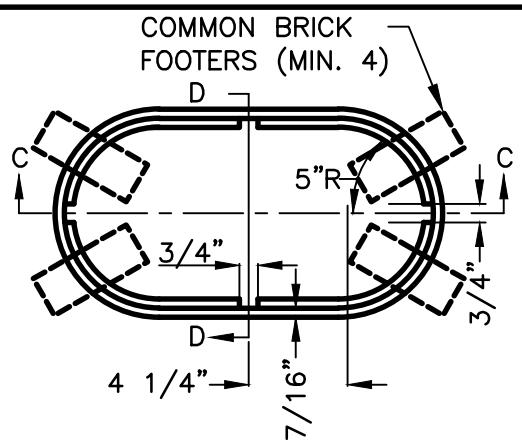

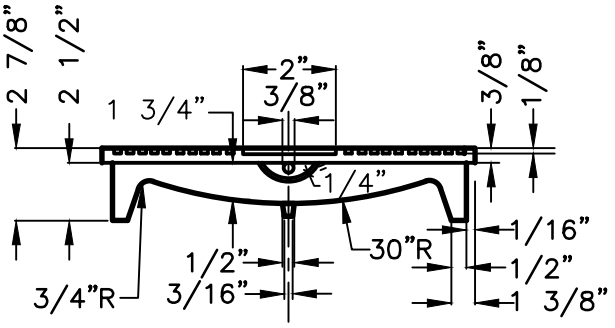

SECTION A–A
CLEANOUT BOX LID

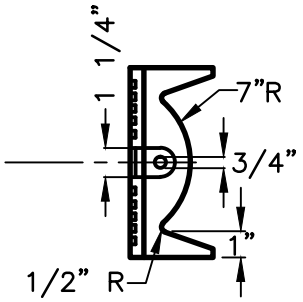

SECTION B–B
CLEANOUT BOX LID

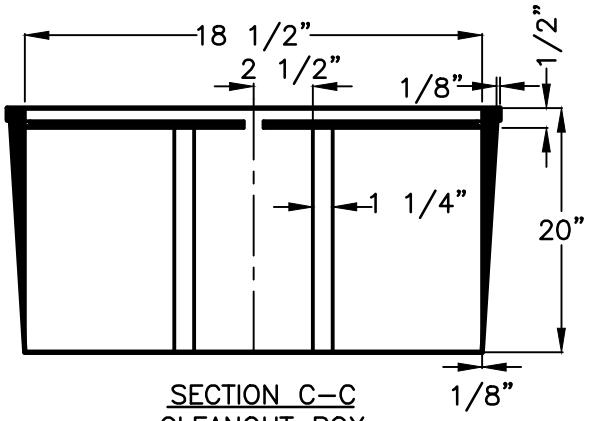

SECTION C–C
CLEANOUT BOX

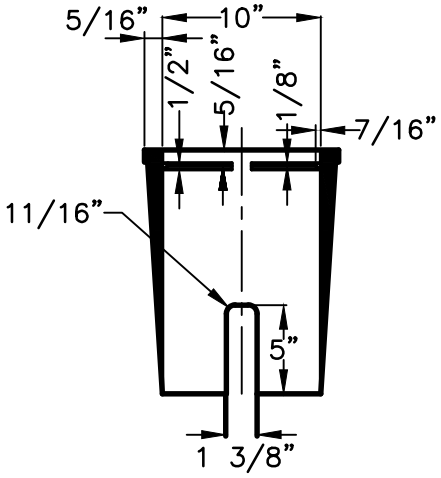

SECTION D–D
CLEANOUT BOX

GENERAL NOTES:

1. UNLESS NOTED OTHERWISE, CAST IRON SHALL CONFORM TO A.S.T.M. SPECIFICATIONS A48 LATEST REVISION FOR CLASS 20 GREY IRON CASTINGS.
2. CASTINGS SHALL BE TRUE AND FREE OF HOLES. THEY SHALL BE CLEANED ACCORDING TO GOOD FOUNDRY PRACTICE, CHIPPED AND GROUND AS NEEDED TO REMOVE FINS AND ROUGH PLACES.
3. FINISHED CASTINGS SHALL BE COATED INSIDE AND OUTSIDE WITH COAL TAR PITCH VARNISH AS INDICATED IN A.W.W.A. SPECIFICATIONS C110, LATEST REVISION. COATING MAY BE APPLIED COLD AND SHALL BE SMOOTH, GLOSSY, NOT BRITTLE WHEN COLD, NOT STICKY WHEN EXPOSED TO THE SUN, AND SHALL ADHERE TO THE METAL AT ALL TEMPERATURES.
4. WHEN COATING IS COMPLETE, LID SHALL FIT SNUGLY WITHOUT ROCKING.

THIS DETAIL WAS TAKEN FROM THE CITY OF ATLANTA'S WEBSITE. IT MAY HAVE BEEN MODIFIED AND SHOULD BE REVIEWED THOROUGHLY.

City of Atlanta	STANDARD DETAILS	REV. DATE: OCT. 2011 ORIG. DATE: NOV 2004 SCALE: N.T.S.
	SANITARY CLEANOUT BOX	DETAIL NO. SS–G_SC005

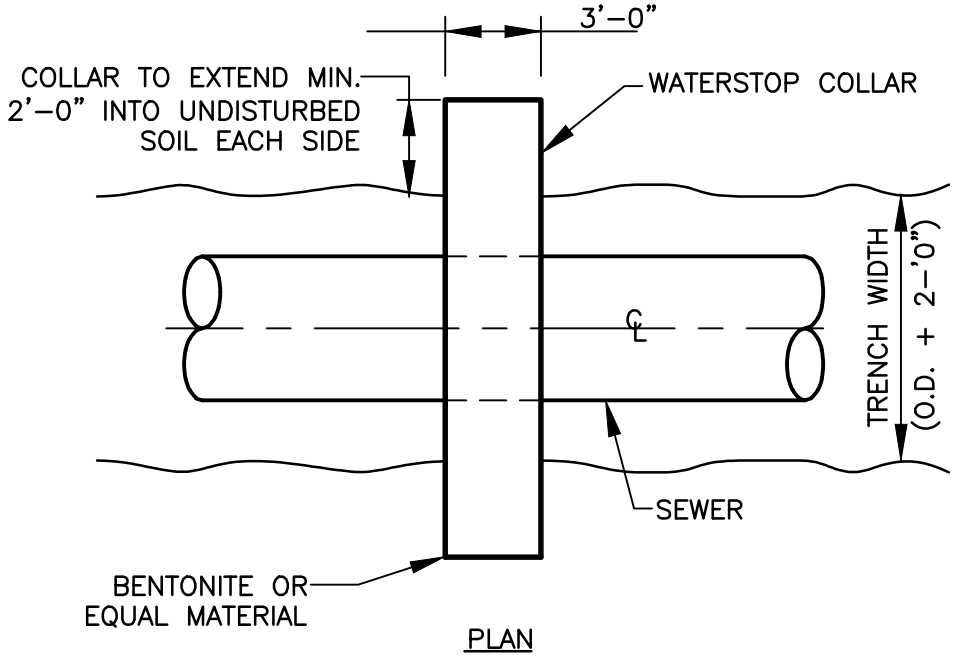

PLAN

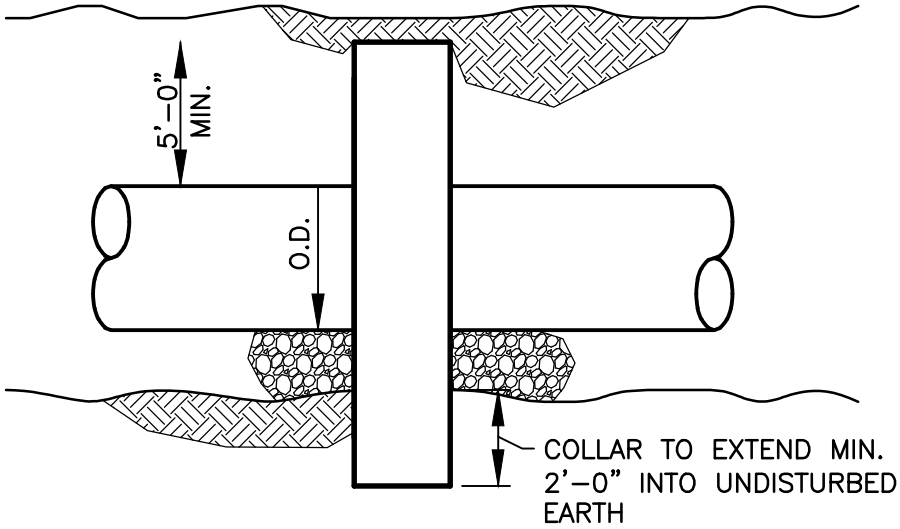

ELEVATION

THIS DETAIL WAS TAKEN FROM THE CITY OF ATLANTA'S WEBSITE. IT MAY HAVE BEEN MODIFIED AND SHOULD BE REVIEWED THOROUGHLY.

City of Atlanta	STANDARD DETAILS	REV. DATE: OCT. 2011 ORIG. DATE: NOV 2004 SCALE: N.T.S.
	WATER STOP COLLAR	DETAIL NO. SS–G_WC001

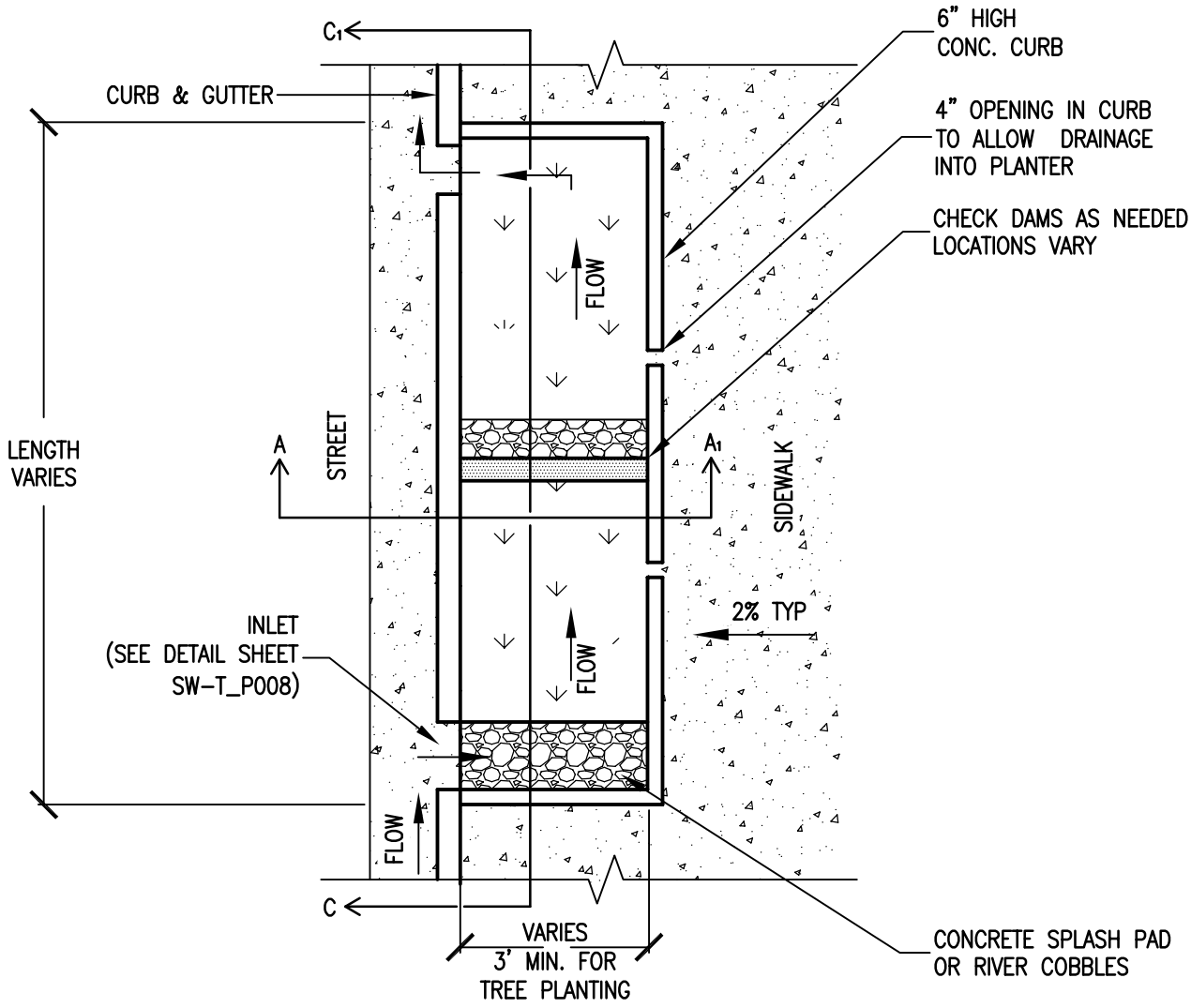

SEE SHEETS SW-T_P003 AND SW-T_P004 FOR SECTIONS

THIS DETAIL WAS TAKEN FROM THE CITY OF ATLANTA'S WEBSITE. IT MAY HAVE BEEN MODIFIED AND SHOULD BE REVIEWED THOROUGHLY.

City of Atlanta	STANDARD DETAILS	REV. DATE: APRIL 2012 ORIG. DATE: SCALE: N.T.S.
	STORMWATER PLANTER NO ON-STREET PARKING	DETAIL NO. SW-T_P001

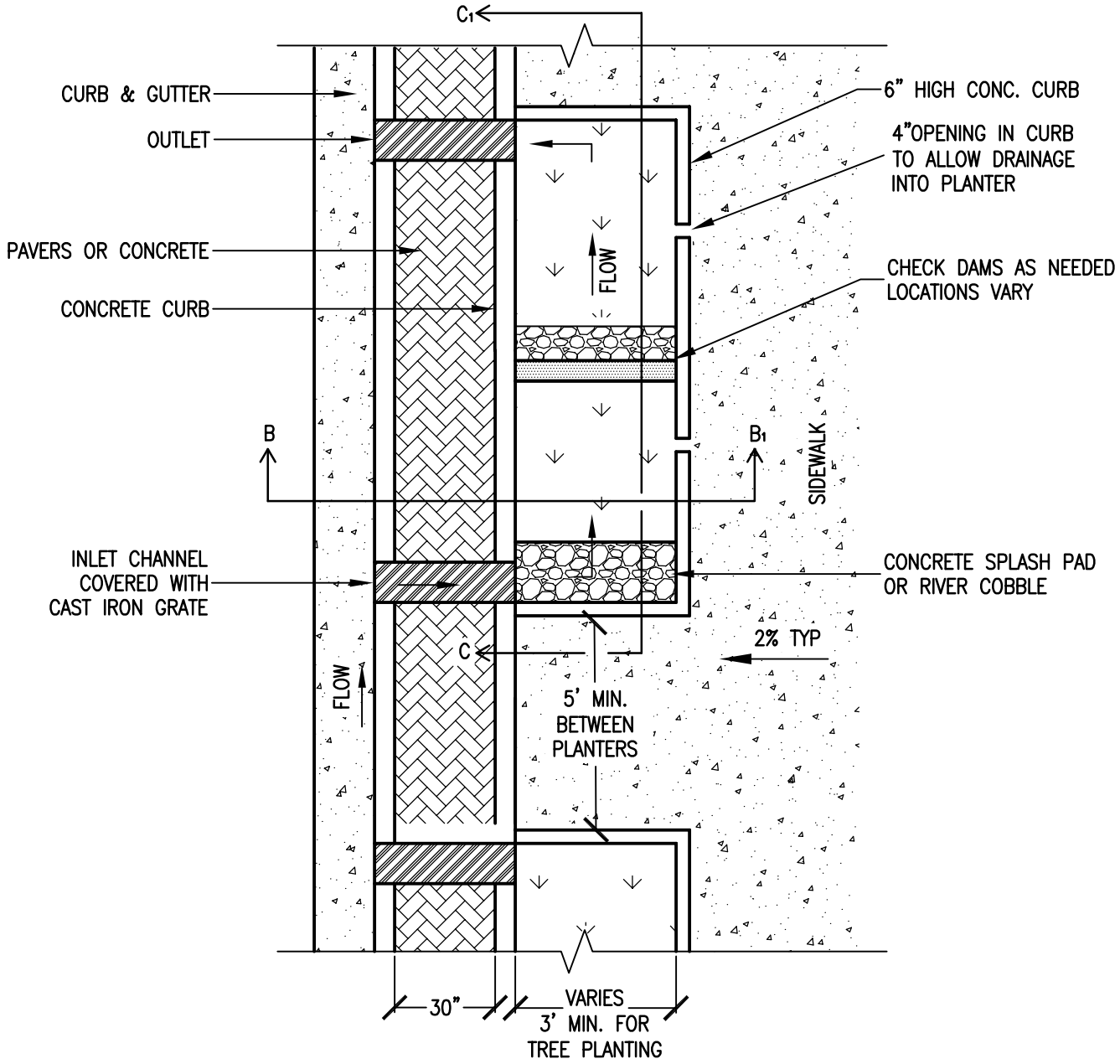

SEE SHEETS SW-T_P003 AND SW-T_P004 FOR SECTIONS

THIS DETAIL WAS TAKEN FROM THE CITY OF ATLANTA'S WEBSITE. IT MAY HAVE BEEN MODIFIED AND SHOULD BE REVIEWED THOROUGHLY.

City of Atlanta

STANDARD DETAILS

STORMWATER PLANTER WITH ON-STREET PARKING

REV.
DATE: APRIL 2012
ORIG. DATE:
SCALE: N.T.S.

DETAIL NO.SW-T_P002

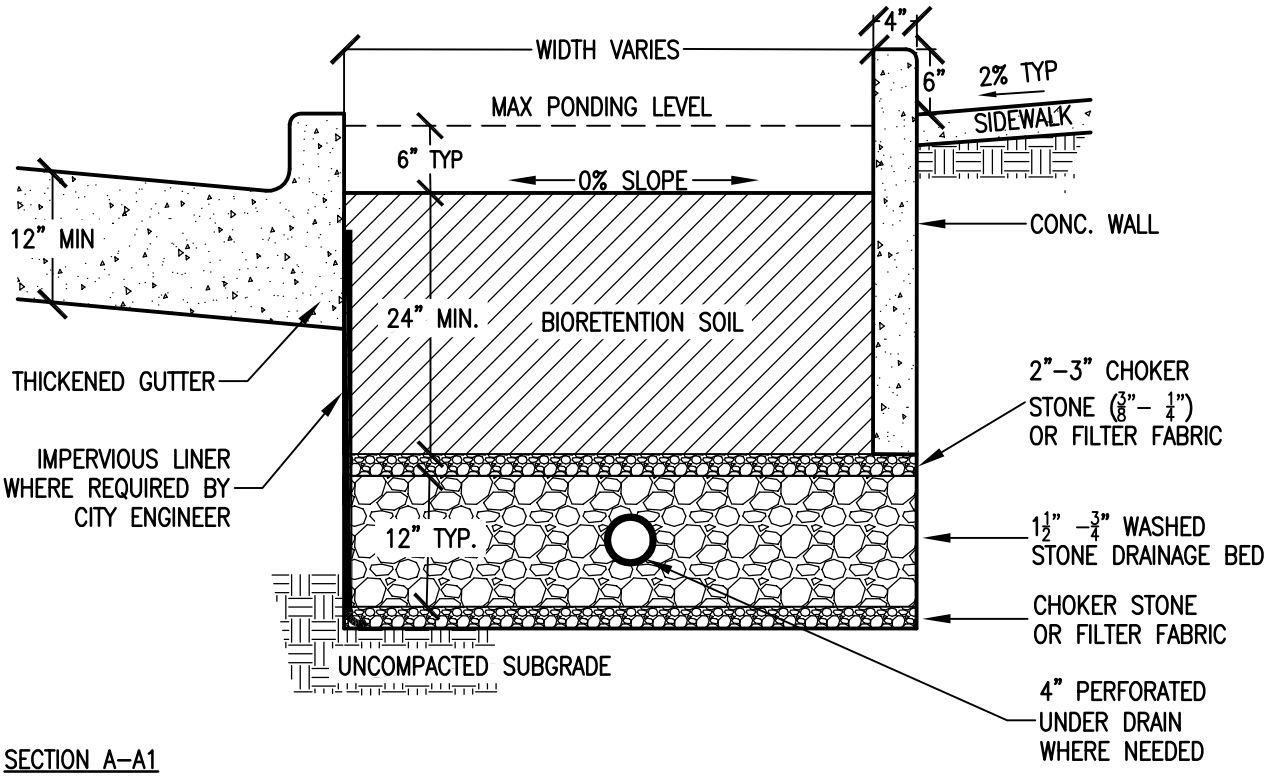

SECTION A–A1
(PLANTER WITHOUT ON–STREET PARKING)

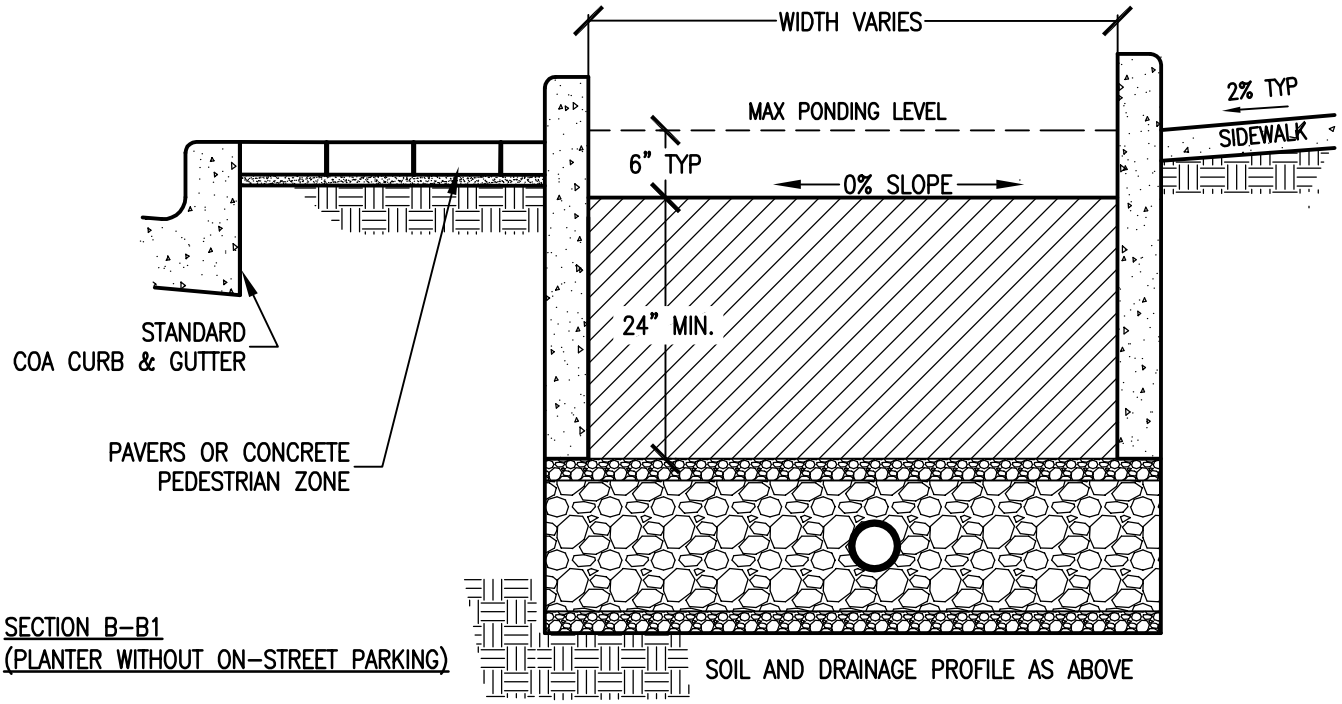

SECTION B–B1
(PLANTER WITHOUT ON–STREET PARKING)

THIS DETAIL WAS TAKEN FROM THE CITY OF ATLANTA'S WEBSITE. IT MAY HAVE BEEN MODIFIED AND SHOULD BE REVIEWED THOROUGHLY.

City of Atlanta	STANDARD DETAILS	REV. DATE: APRIL 2012 ORIG. DATE: NOV 2004 SCALE: N.T.S.
	STORMWATER PLANTER SECTIONS	DETAIL NO. SW–T_P003

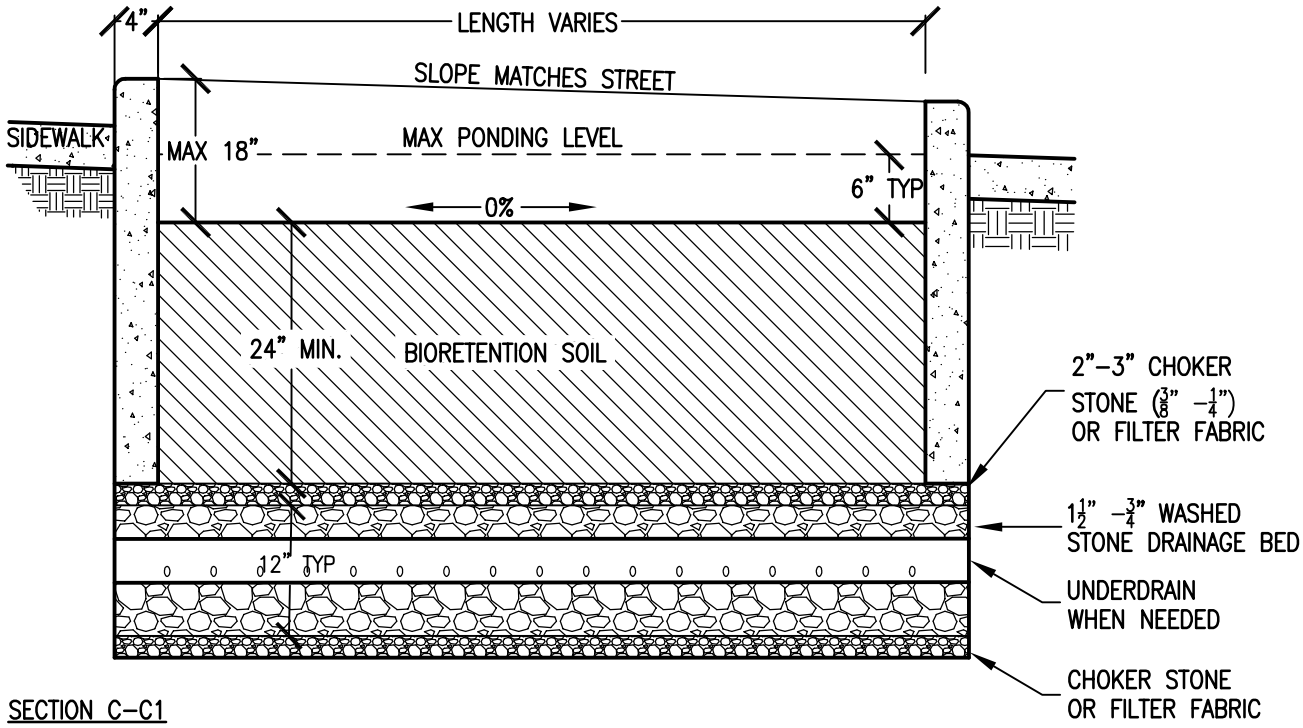

SECTION C-C1
LONGITUDINAL SECTION, LEVEL PLANTING AREA

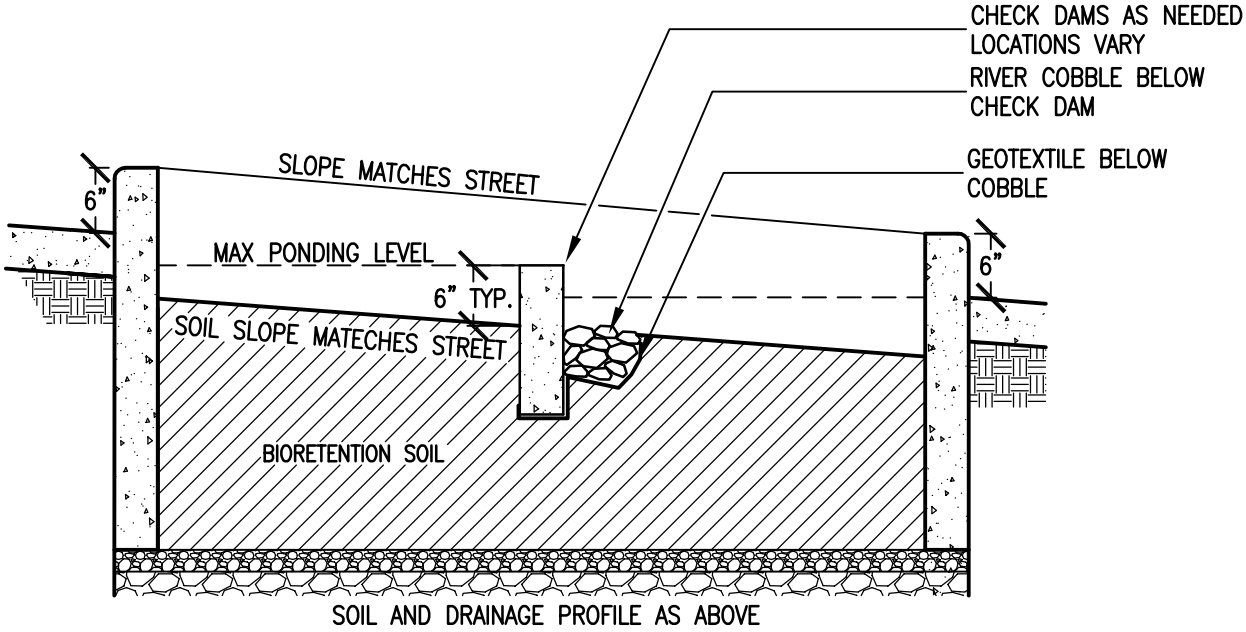

SECTION C-C1
LONGITUDINAL SECTION, SLOPED PLANTING AREA

NOTE: IF SLOPES OF STREET AND SIDEWALK ALLOW, PLANTERS SHOULD BE BUILT WITH LEVEL PLANTING AREAS

THIS DETAIL WAS TAKEN FROM THE CITY OF ATLANTA'S WEBSITE. IT MAY HAVE BEEN MODIFIED AND SHOULD BE REVIEWED THOROUGHLY.

City of Atlanta	STANDARD DETAILS	REV. DATE: APRIL 2012 ORIG. DATE: SCALE: N.T.S.
	STORMWATER PLANTER LONGITUDINAL SECTIONS	DETAIL NO. SW-T_P004

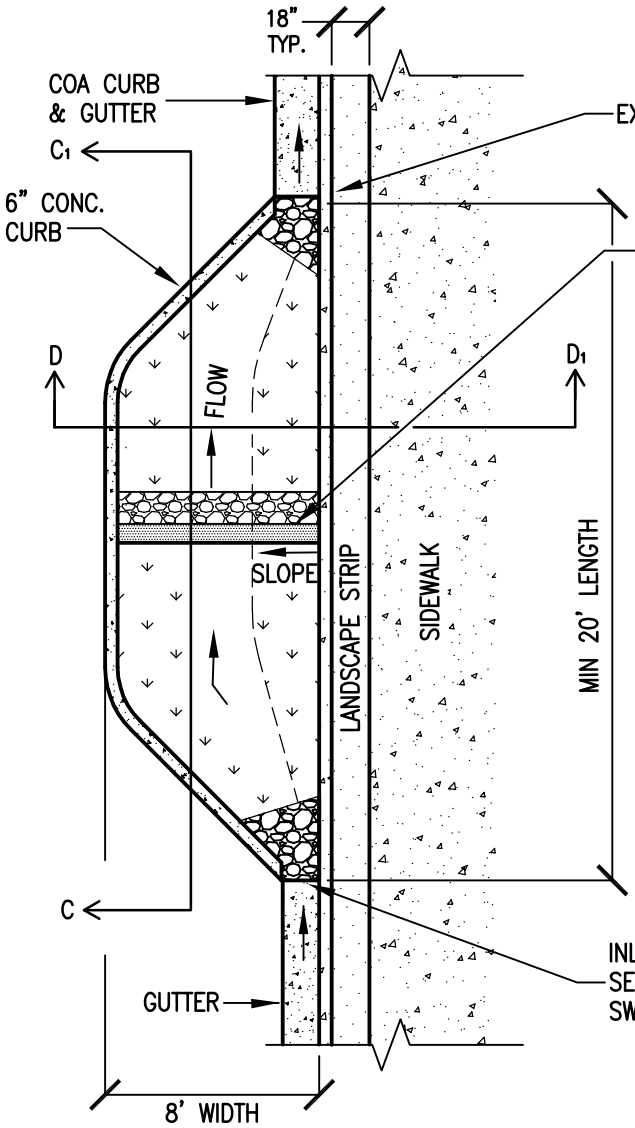

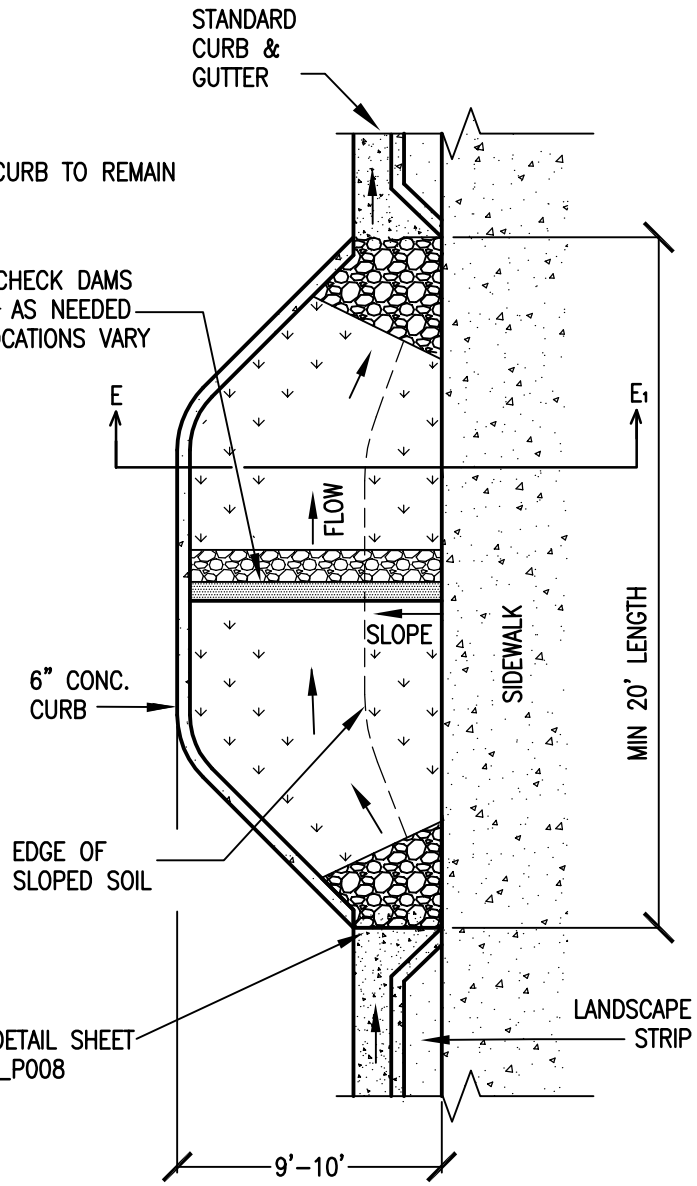

SEE SHEETS SW-T_P004 AND SW-T_P007 FOR SECTIONS

"BULB-OUT"/CURB EXTENSION
NOT EXTENDING INTO LANDSCAPE STRIP

"BULB-OUT"/CURB EXTENSION
EXTENDING INTO LANDSCAPE STRIP

THIS DETAIL WAS TAKEN FROM THE CITY OF ATLANTA'S WEBSITE. IT MAY HAVE BEEN MODIFIED AND SHOULD BE REVIEWED THOROUGHLY.

City of Atlanta

STANDARD DETAILS

STORMWATER
PLANTER'BULB-OUTS"/ CURB EXTENSIONS

REV.
DATE: APRIL 2012
ORIG. DATE:
SCALE: N.T.S.

DETAIL NO. SW-T_P005

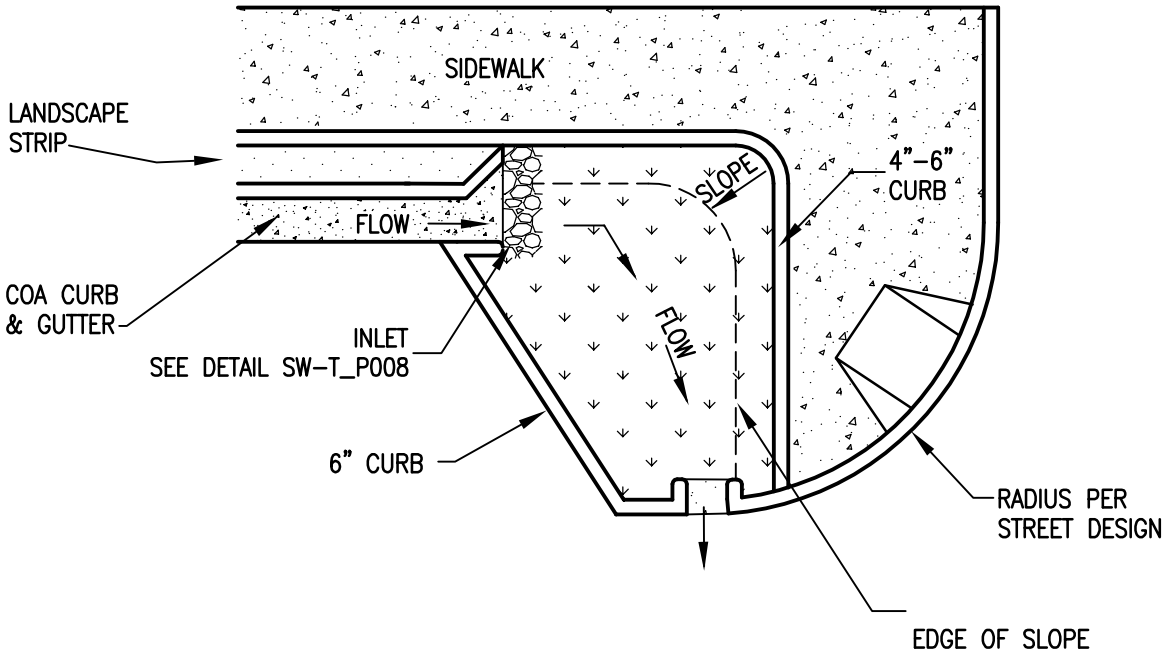

"BULB-OUT"/CURB EXTENSION
AT INTERSECTION, TYPICAL PLAN

THIS DETAIL WAS TAKEN FROM THE CITY OF ATLANTA'S WEBSITE. IT MAY HAVE BEEN MODIFIED AND SHOULD BE REVIEWED THOROUGHLY.

City of Atlanta	STANDARD DETAILS	REV. DATE: APRIL 2012 ORIG. DATE: SCALE: N.T.S.
	STORMWATER PLANTER "BULB-OUT" AT INTERSECTION	DETAIL NO. SW-T_P006

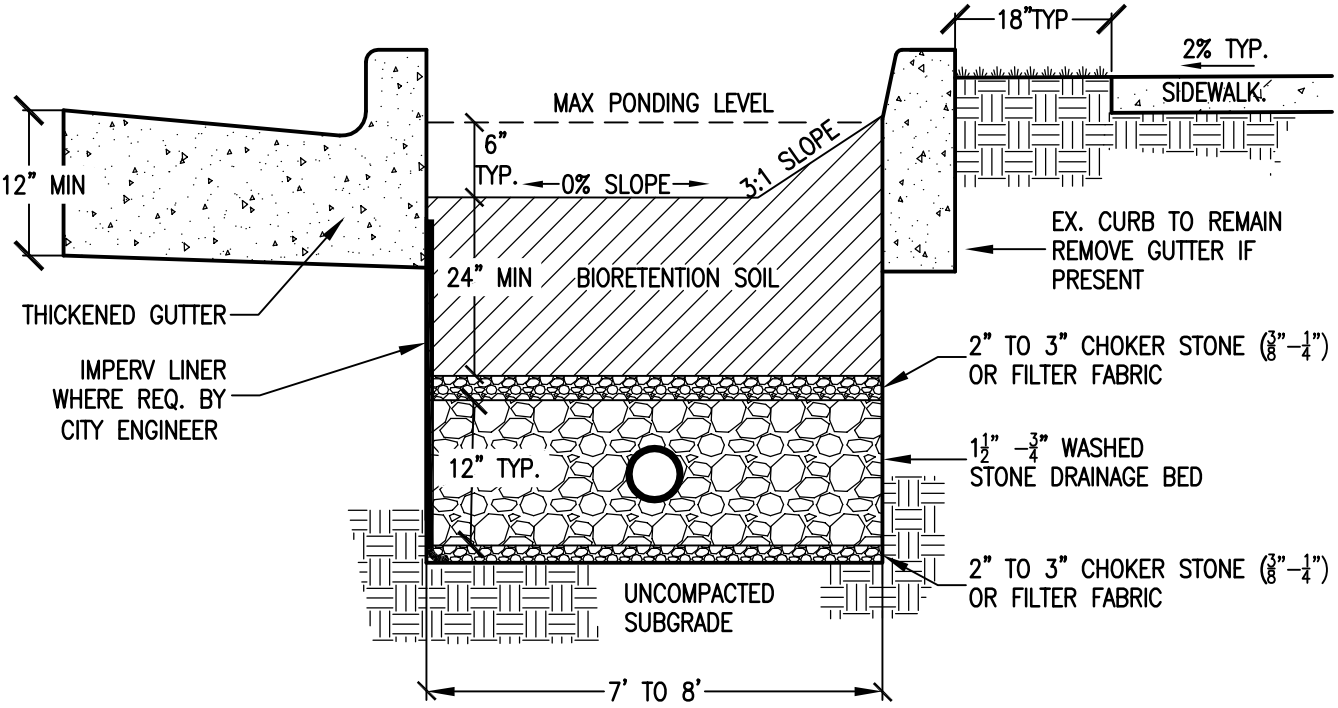

SECTION D-D1
"BULB-OUT" NOT INCORPORATING LANDSCAPE STRIP

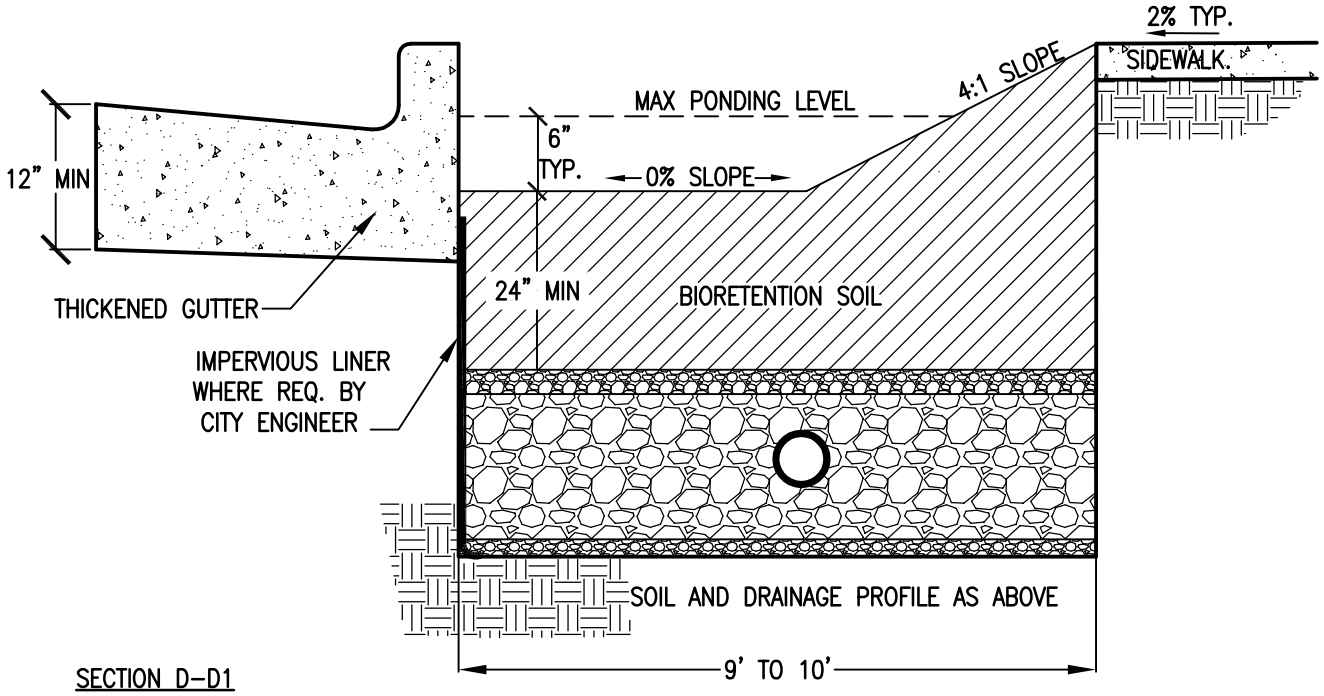

SECTION D-D1
"BULB-OUT" INCORPORATING LANDSCAPE STRIP

THIS DETAIL WAS TAKEN FROM THE CITY OF ATLANTA'S WEBSITE. IT MAY HAVE BEEN MODIFIED AND SHOULD BE REVIEWED THOROUGHLY.

City of Atlanta	STANDARD DETAILS	REV. DATE: APRIL 2012 ORIG. DATE: SCALE: N.T.S.
	STORMWATER PLANTER "BULB-OUT" SECTIONS	DETAIL NO. SW-T_P007

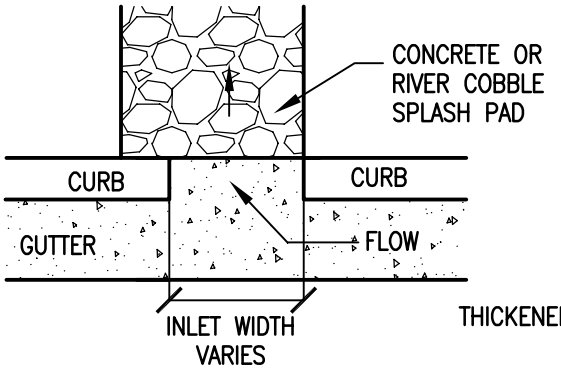

PLANTER INLET– PLAN

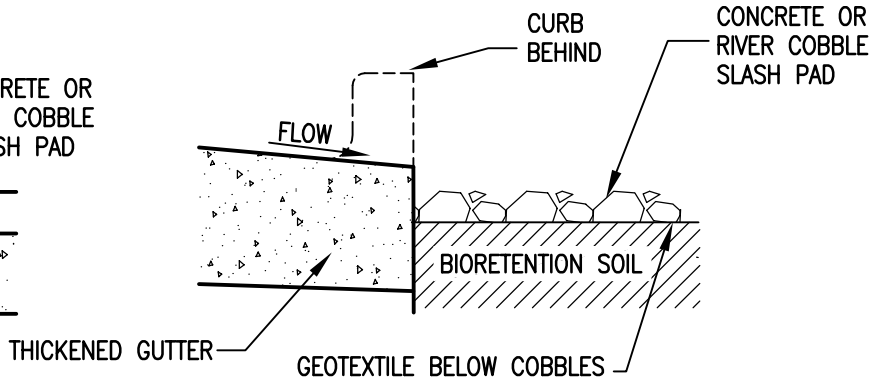

PLANTER INLET– SECTION

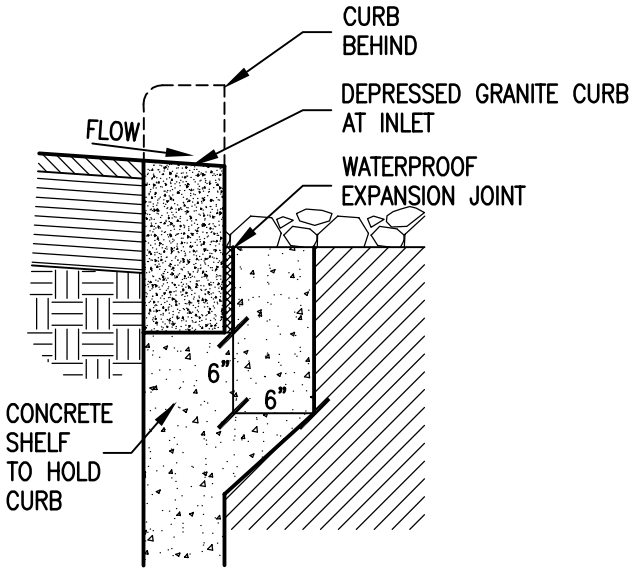

INLET AT GRANITE CURB

NOTES:

1) SIZE INLETS TO ACCOMMODATE DESIRED FLOWS.

2) INLETS & GUTTER MAY BE MODIFIED TO ADJUST FLOW INTO PLANTER.

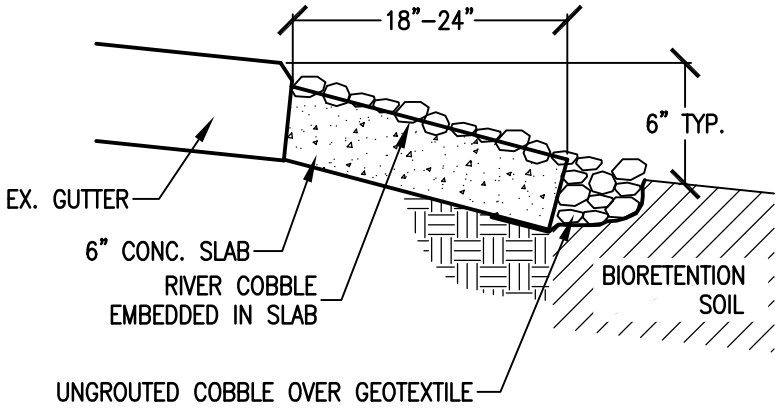

FOR 'BULB OUTS'/ CURB EXTENSIONS

THIS DETAIL WAS TAKEN FROM THE CITY OF ATLANTA'S WEBSITE. IT MAY HAVE BEEN MODIFIED AND SHOULD BE REVIEWED THOROUGHLY.

City of Atlanta	STANDARD DETAILS	REV. DATE: APRIL 2012 ORIG. DATE: SCALE: N.T.S.
	STORMWATER PLANTER INLET DETAILS	DETAIL NO. SW–T_P008

NOTES FOR STORMWATER PLANTERS

1. WIDTH AND LENGTH OF PLANTER IS BASED ON SITE CONDITIONS AND STORMWATER TREATMENT VOLUME.

2. LOCATE ALL UTILITIES PRIOR TO DESIGN. SITE CONDITIONS WILL VARY AND SIGNIFICANT DESIGN ADAPTATIONS MAY BE NEEDED TO ADDRESS UTILITY CONFLICTS, STEEP SLOPES, AND OTHER CONSTRAINTS.

3. IF SLOPE OF ROAD AND SIDEWALK ALLOW, PLANTERS SHOULD BE BUILT WITH LEVEL PLANTING AREAS (0% SLOPE LONGITUDINALLY) FOR MAXIMUM STORMWATER TREATMENT VOLUME.

4. LONGITUDINAL SLOPES OF CURBS SURROUNDING PLANTER MATCH ROAD. LEVEL BOTTOM PLANTERS HAVE A MAXIMUM DEPTH OF 18" BELOW SURROUNDING CURB AT DEEPEST POINT.

5. CROSS SLOPES SHOULD ALWAYS BE AS CLOSE TO LEVEL (0% SLOPE) AS POSSIBLE.

6. CURBS, GUTTERS, STREETS, AND SIDEWALKS SHALL CONFORM TO CITY OF ATLANTA STANDARDS.

7. PROVIDE ELEVATIONS AT ALL INLETS AND OUTLETS, AS WELL AS ALL GRADES ON STREET AND BOTTOM OF PLANTER.

S. SIDEWALK ELEVATION MUST BE HIGHER THAN MAXIMUM FLOW OR POOL ELEVATION.

9. PLANTERS MUST BE ABLE TO WITHSTAND STORMWATER FLOWS WITHOUT EROSION OR OTHER DAMAGE. INLETS SHOULD BE SIZED AND CHECK DAMS USED TO ENSURE APPROPRIATE VELOCITIES.

10. ALL PLANTERS MUST BE FULLY VEGETATED. SUGGESTED SPECIES. CAN BE FOUND IN THE GEORGIA STORMWATER MANAGEMENT MANUAL, VOL. 2, APPENDIX F.

11. ALL VEGETATED AREAS MUST BE MULCHED WITH EITHER 2–3" OF NON–FLOATABLE ORGANIC MULCH (SUCH AS SHREDDED HARDWOOD OR LEAF MOULD) OR STONE. STONE MULCH MAY BE NEEDED IN AREAS OF STRONG FLOWS TO PREVENT EROSION. ALL PONDING ELEVATIONS SHOWN IN DETAILS ARE ASSUMED TO BE MEASURRED FROM TOP OF MULCH LAYER

12. BIORETENTLON SOIL MUST CONFORM TO PERFORMANCE STANDARDS DETAILED IN SPECIFICATIONS.

13. BIORETENTION SOIL MUST BE A MIN. OF 24" DEEP AT SHALLOWEST POINT. 36" DEPTH IS REQUIRED FOR PLANTING TREES.

14. UNDERDRAINS MAY BE REQUIRED UNLESS INFILTRATION TESTS IN SOILS AT BOTTOM OF PLANTER SHOW SATURATED INFILTRATION RATES OF GREATER THAN $\frac{1}{2}$ INCH PER HOUR (1 FOOT/DAY).

THIS DETAIL WAS TAKEN FROM THE CITY OF ATLANTA'S WEBSITE. IT MAY HAVE BEEN MODIFIED AND SHOULD BE REVIEWED THOROUGHLY.

City of Atlanta	STANDARD DETAILS	REV. DATE: APRIL 2012 ORIG. DATE: SCALE: N.T.S.
	STORMWATER PLANTER NOTES	DETAIL NO. SW–T_P009

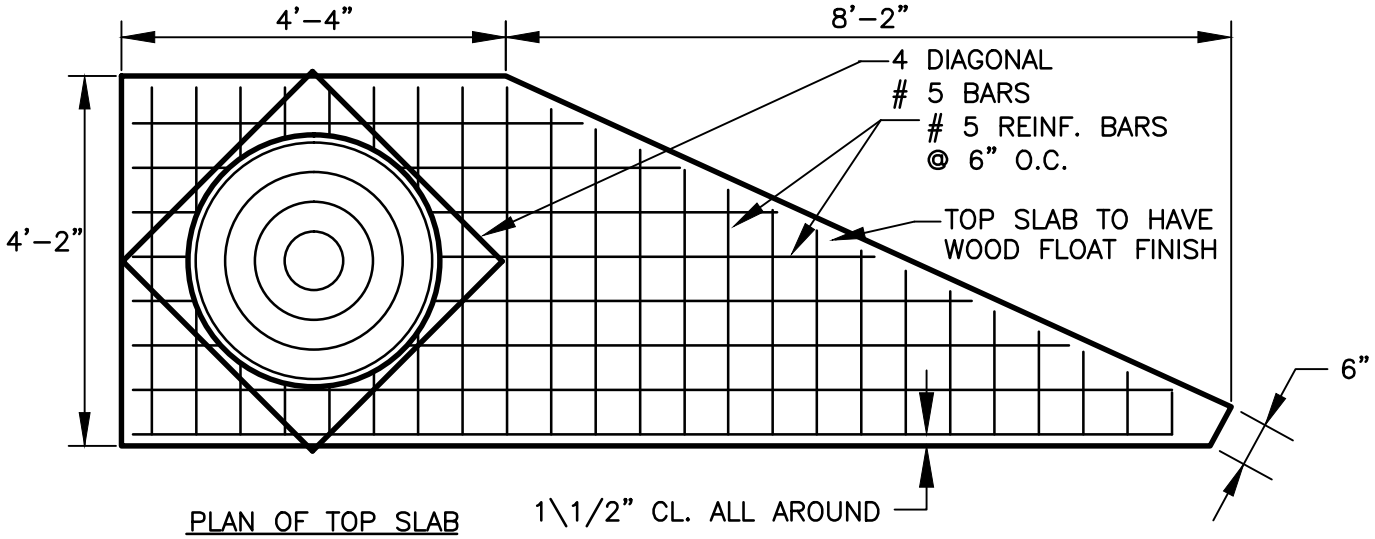

PLAN OF TOP SLAB

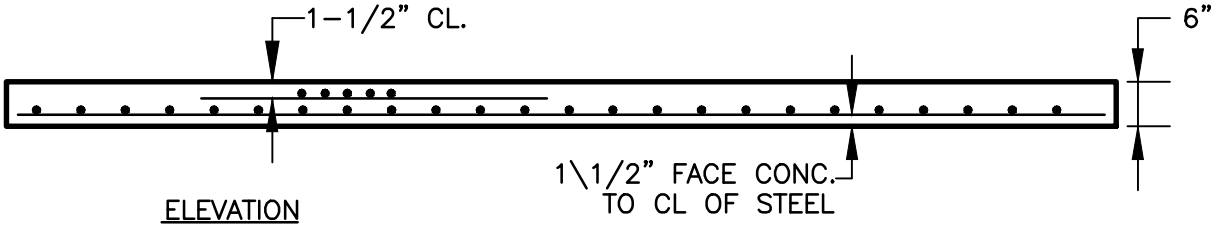

ELEVATION

STEEL PLACEMENT

NOTE:
SEE CITY OF ATLANTA STANDARD LIGHT CASTING FRAME AND COVER FOR CASTING DETAILS, DETAIL NO. MH–3A

THIS DETAIL WAS TAKEN FROM THE CITY OF ATLANTA'S WEBSITE. IT MAY HAVE BEEN MODIFIED AND SHOULD BE REVIEWED THOROUGHLY.

City of Atlanta	STANDARD DETAILS	REV. DATE: SEPT 2011 ORIG. DATE: NOV 2004 SCALE: N.T.S.
	TYPE "C" CATCH BASIN	DETAIL NO. SW–G_CB001

City of Atlanta

STANDARD DETAILS

TYPE "C" CATCH BASIN

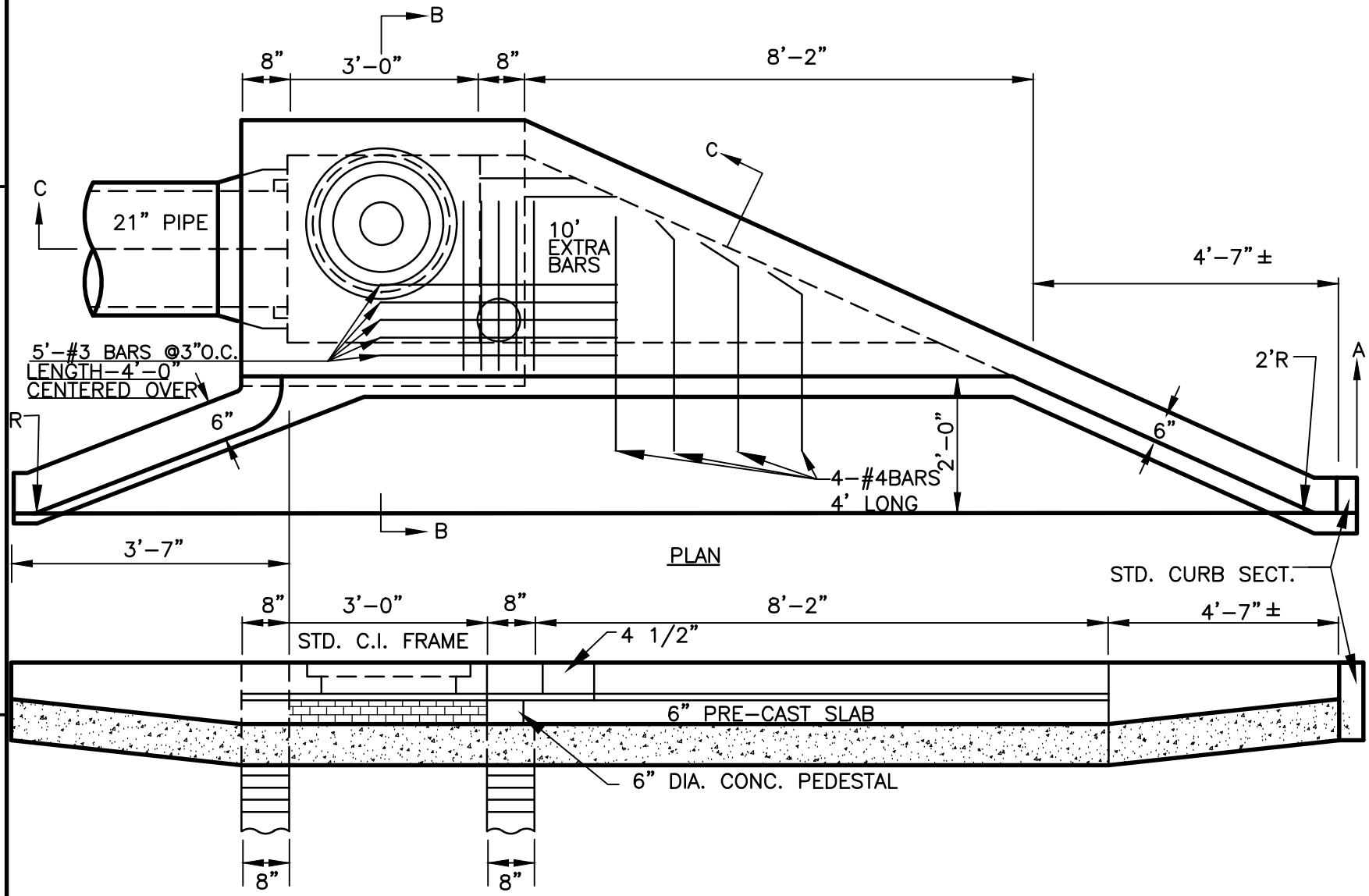

SECTION A-A

THIS DETAIL WAS TAKEN FROM THE CITY OF ATLANTA'S WEBSITE. IT MAY HAVE BEEN MODIFIED AND SHOULD BE REVIEWED THOROUGHLY.

REV.
DATE: SEPT 2011
ORIG. DATE: JAN 1968
SCALE: N.T.S.

DETAIL NO. SW-G_CB011

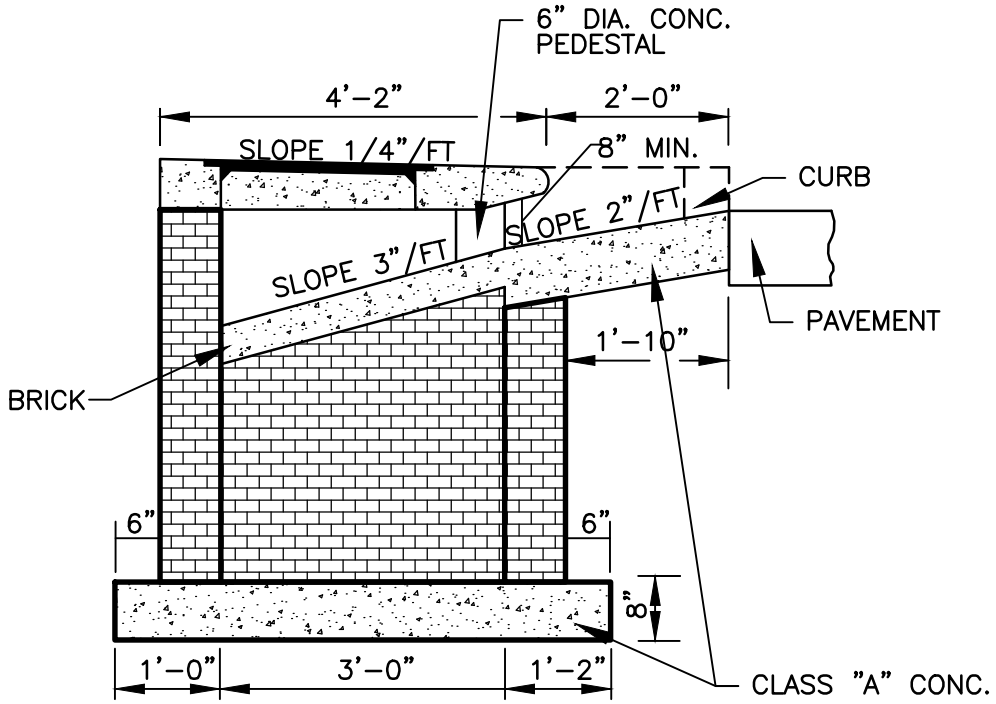

SECTION B-B

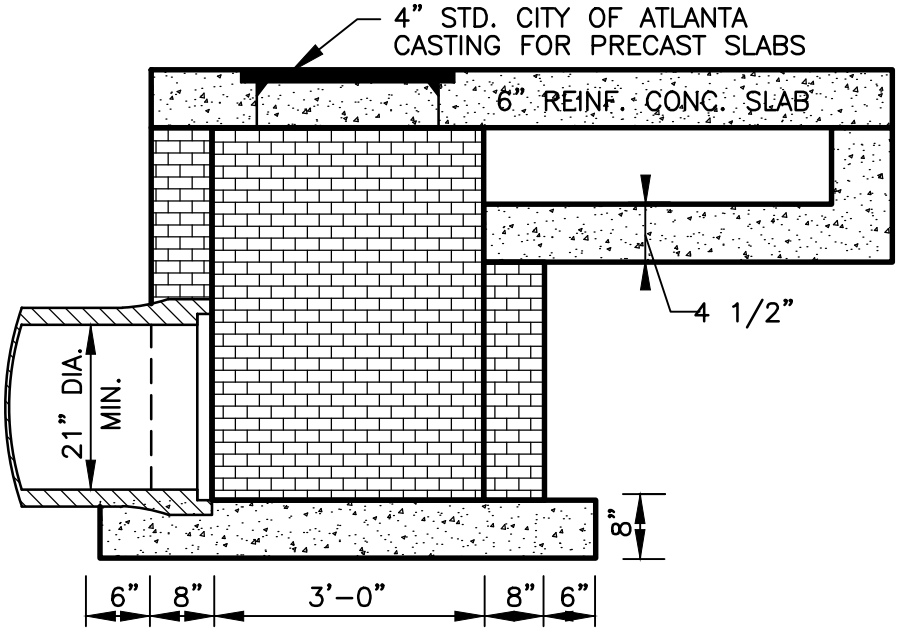

SECTION C-C

THIS DETAIL WAS TAKEN FROM THE CITY OF ATLANTA'S WEBSITE. IT MAY HAVE BEEN MODIFIED AND SHOULD BE REVIEWED THOROUGHLY.

City of Atlanta	STANDARD DETAILS	REV. DATE: SEPT 2011 ORIG. DATE: JULY 1984 SCALE: N.T.S.
	TYPE "C" CATCH BASIN	DETAIL NO. SW-G_CB012

NOTE:
FRAME AND COVER TO BE GREY IRON CASTING ACCORDING TO A.S.T.M. SPECIFICATION NO. A48–30 OR NO. A438–25B. COVER AND FRAME MUST BE FITTED BEFORE LEAVING SHOP. TOP OF PLATE CHECKERED WITH GROOVES 3/16" WIDE, 1/16"DEEP, 1"C TO C.

NOTE:
1. COVER TO HAVE CIRCULAR GROOVES 3/16" WIDE, 1/16" DEEP AND 1"C. TO C.
2. LETTERS 1" HIGH, RAISED 1/4" FROM FACE.
3. 4 HOLES 1" DIAM IN COVER.

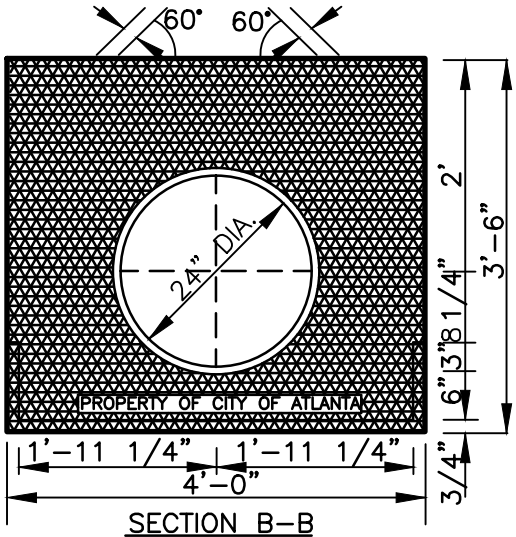

SECTION B–B

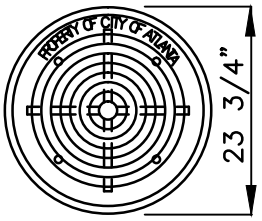

TOP

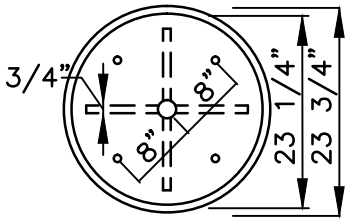

BOTTOM

NOTE:
APPROX. WT.
TOP 90 LBS
FRAME 375 LBS
TOTAL 465 LBS

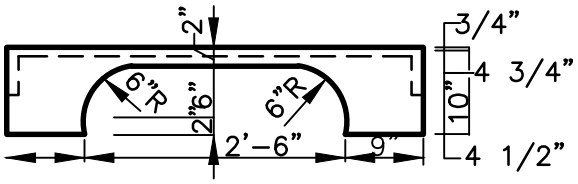

FRONT ELEVATION

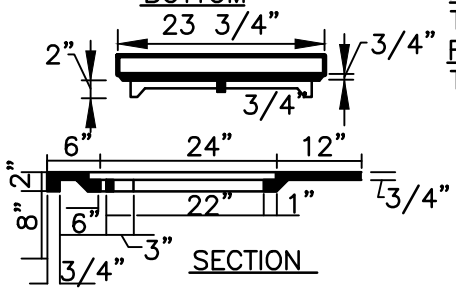

SECTION

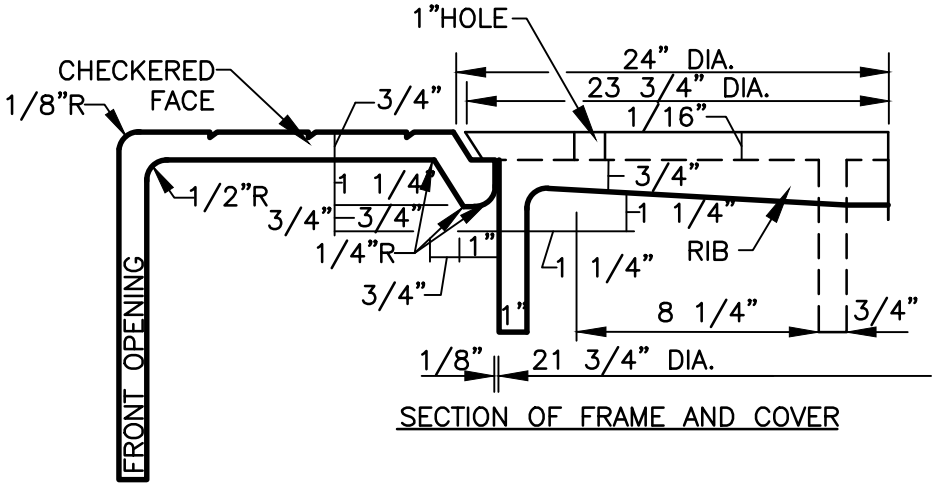

SECTION OF FRAME AND COVER

THIS DETAIL WAS TAKEN FROM THE CITY OF ATLANTA'S WEBSITE. IT MAY HAVE BEEN MODIFIED AND SHOULD BE REVIEWED THOROUGHLY.

City of Atlanta	STANDARD DETAILS	REV.
		DATE: SEPT 2011
	STANDARD CATCH BASIN CASTING	ORIG. DATE: SEP. 1993
		SCALE: N.T.S.
		DETAIL NO. SW–G_CB014

NOTE:
FRAME AND COVER TO BE GREY IRON CASTING ACCORDING TO A.S.T.M.–A 536, GRADE 60–40–18 COVER AND FRAME MUST BE FITTED BEFORE LEAVING SHOP. TOP OF PLATE CHECKERED WITH GROOVES 3/16" WIDE. 1/16" DEEP, 1"C. TO C.

NOTE:
1. COVER TO HAVE CIRCULAR GROOVES 3/16" WIDE, 1/16" DEEP AND 1"C. TO C.
2. LETTERS 1" HIGH, RAISED 1/4" FROM FACE.
3. 4 HOLES 1" DIAM IN COVER.

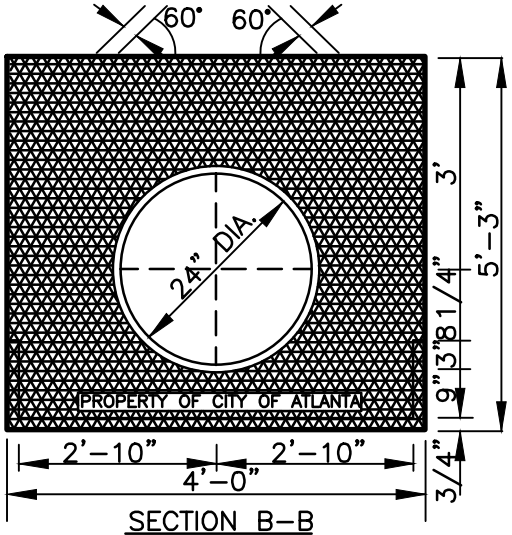

SECTION B–B

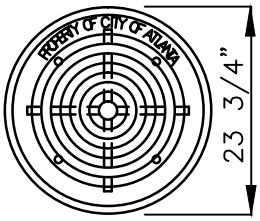

TOP

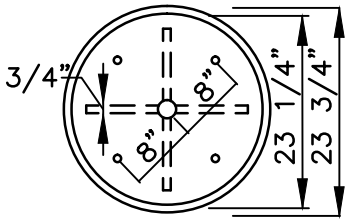

BOTTOM

NOTE:
APPROX. WT.
TOP 90 LBS
FRAME 435 LBS
TOTAL 525 LBS

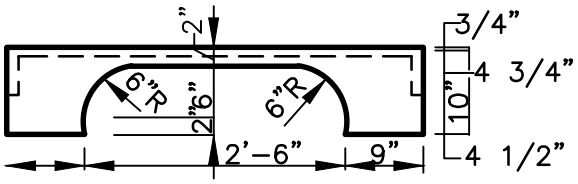

FRONT ELEVATION

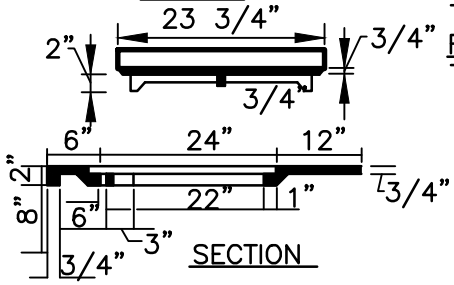

SECTION

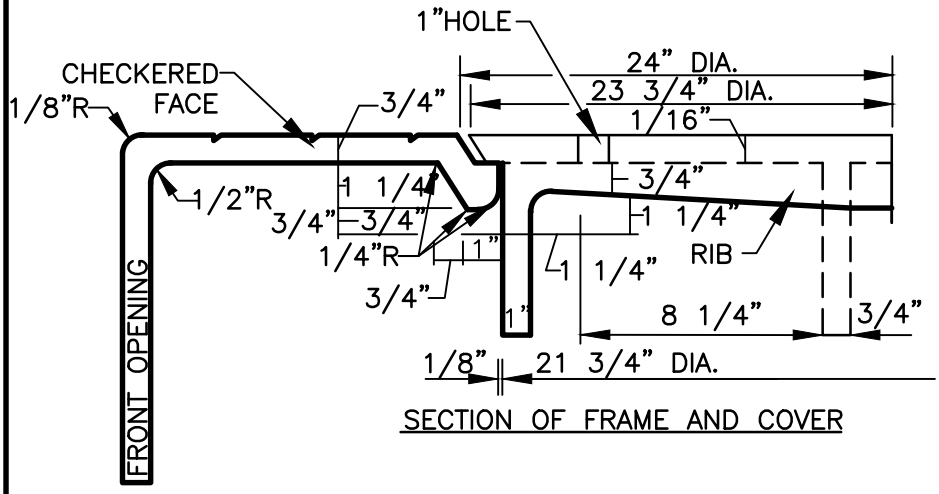

SECTION OF FRAME AND COVER

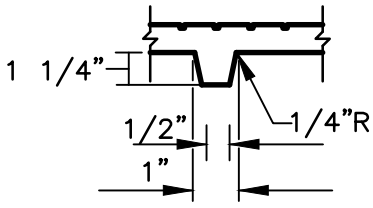

SECTION B–B

THIS DETAIL WAS TAKEN FROM THE CITY OF ATLANTA'S WEBSITE. IT MAY HAVE BEEN MODIFIED AND SHOULD BE REVIEWED THOROUGHLY.

City of Atlanta	STANDARD DETAILS	REV. DATE: SEPT 2011 ORIG. DATE: JULY 1984 SCALE: N.T.S.
	STANDARD HEAVY–DUTY CATCH BASIN CASTING	DETAIL NO. SW–G_CB015

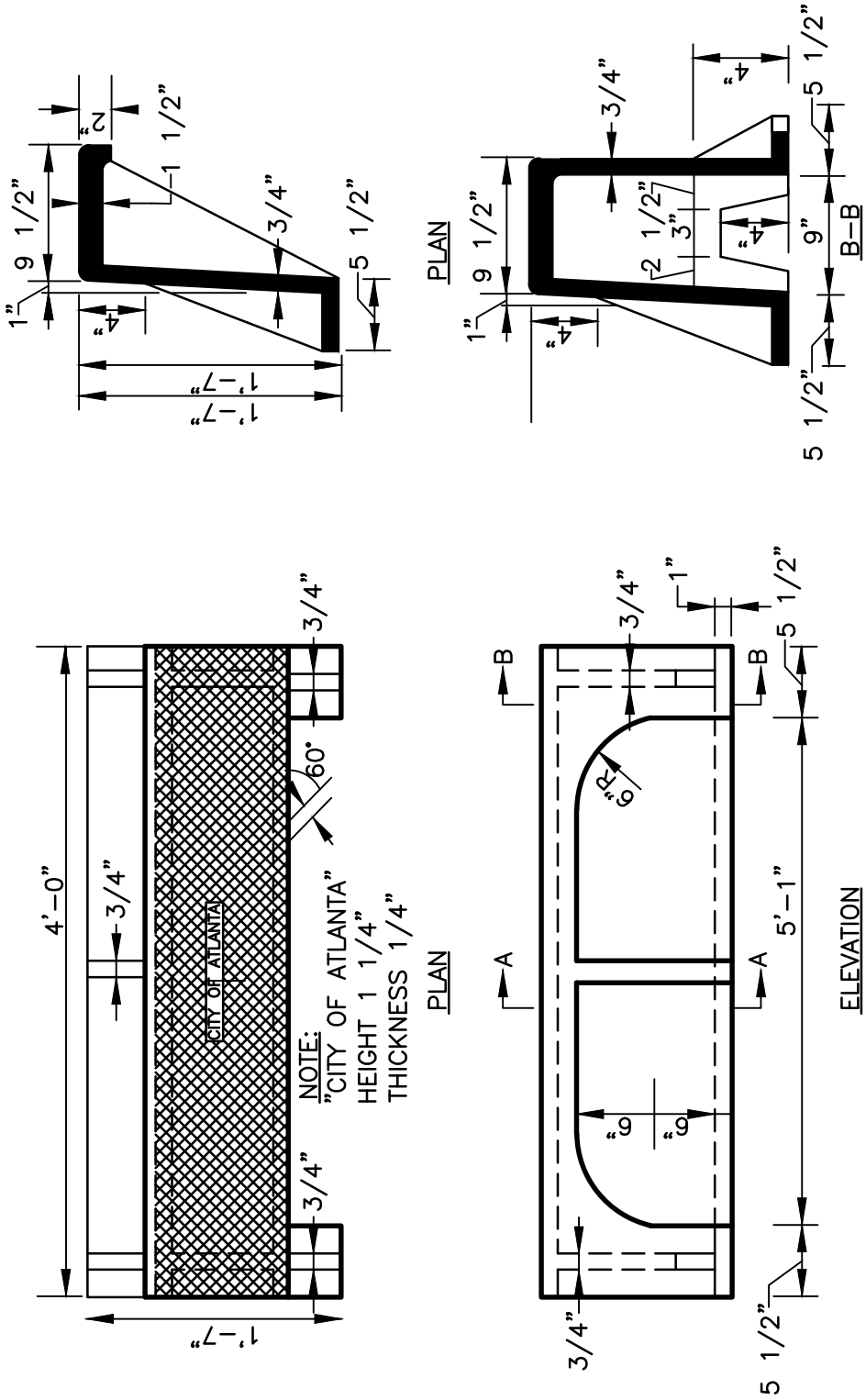

NOTE:
OPNENING LEFT FOR CONVIENCE OF FOUNDRY AND MAY BE REDUCED IN SIZE OR ELIMINATED

NOTE:
HOOD GRATE, AND GRATE FRAME TO BE GRAY IRON CASTING AS PER A.S.T.M. SPEC. NO A48-30 INCLUDING TRANSVERSE TEST BARS. GRATE B, FRAME MUST BE FITTED BEFORE LEAVING SHOP. CHECKER TOP OF HOOD GROOVES 3/16" WIDE. 1/16" DEEP 1"CC. TOL. 1/16" PER 24". ESTIMATED WEIGHT 497 LBS.

THIS DETAIL WAS TAKEN FROM THE CITY OF ATLANTA'S WEBSITE. IT MAY HAVE BEEN MODIFIED AND SHOULD BE REVIEWED THOROUGHLY.

City of Atlanta	STANDARD DETAILS	REV. DATE: SEPT 2011 ORIG. DATE: JULY 1984 SCALE: N.T.S.
	TYPE B (MOD.) CATCH BASIN CASTING	DETAIL NO. SW-G_CB016

NOTES:

1. INLET STRUCTURE PHYSICAL DESIGN SHALL PROVIDE TOP SLAB AND FLOW OPENING CONFIGURATION EQUAL TO THE DIMENSIONAL REQUIREMENTS OF GDOT 1033D, 1034D.

2. INLET STRUCTURE STRUCTURAL DESIGN SHALL CONFORM TO ACI 318 AND AASHTO STANDARD SPECIFICATION FOR HIGH BRIDGES, (LATEST EDITIONS). LIVE LOADS FOR DESIGN SHALL INCLUDE HS20 TRAFFIC.

3. INLET STRUCTURE RAW MATERIALS SHALL MEET OR EXCEED THE LATEST EDITION OF THE FOLLOWING SPECIFICATIONS:
   - CONCRETE – CLASS AA OR APPROVED EQUAL (TINDALL MIX 47)
   - REINFORCING BAR – ASTM A706, GRADE 60
   - REINFORCING WIRE – AASHTO M32 AND ASTM A82
   - MANHOLE FRAME AND COVER – "TINDALL" CAST IN PLACE TOP FACE OF FRAME & COVER.

4. INLET STRUCTURE MANUFACTURE SHALL CONFORM TO LATEST EDITION OF ASTM C913, WITH PRODUCTION IN A NPCA AND PCI CERTIFIED PLANT.

5. LIFT POINT DESIGN SHALL CONFORM TO OSHA STANDARD 1926.704.

6. EXTERIOR OF TOP SLAB SHALL HAVE A BROOM FINISH. ALL OTHER SURFACES SHALL HAVE STANDARD FORM FINISH.

7. FIELD GROUTED SLOPE ON DOWNSTREAM TROUGH REQUIRED ON TYPE 17 CURB GRADES ABOUT 4% TO MAINTAIN 24:1

8. FIELD GROUTED SLOPE ON DOWNSTREAM TROUGH REQUIRED ON TYPE 18 CURB GRADES ABOUT 0% TO MAINTAIN 24:1

9. BUTYL RUBBER SEALANT SHALL MEET THE REQUIREMENTS OF SECTION 714.03 OF THE SCDHPT STANDARD SPECIFICATIONS AND AASHTO M198, TYPE B.

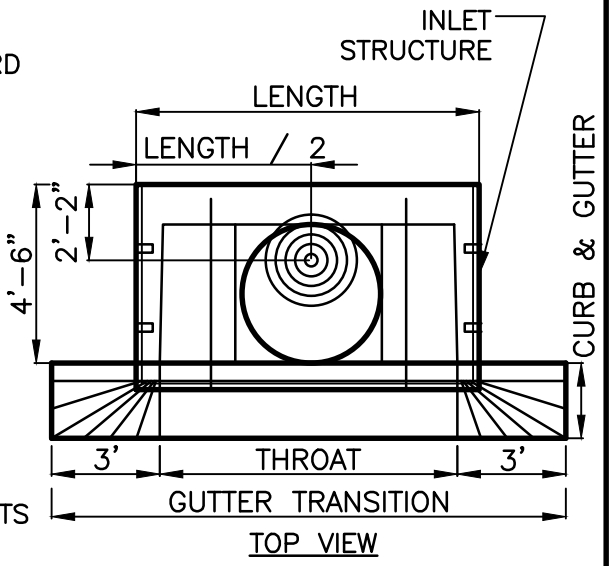

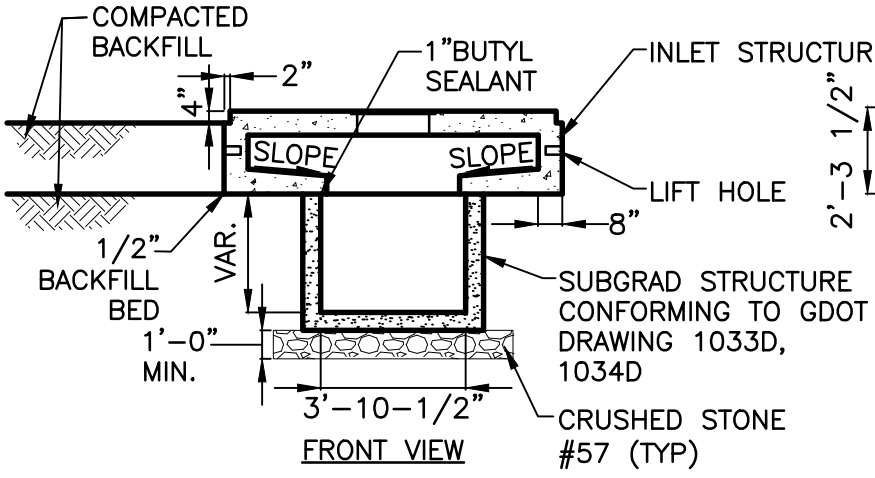

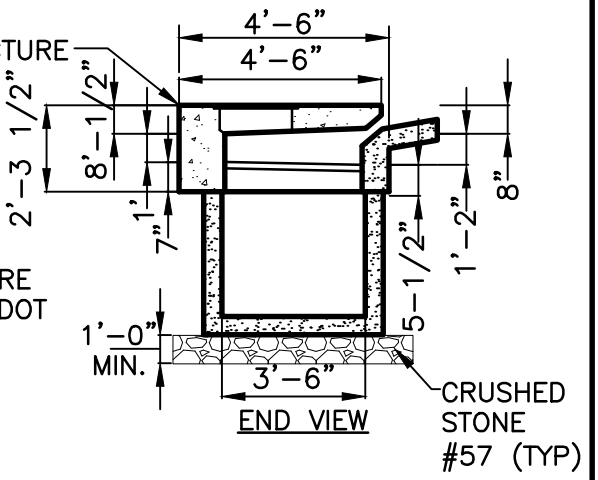

THIS DETAIL WAS TAKEN FROM THE CITY OF ATLANTA'S WEBSITE. IT MAY HAVE BEEN MODIFIED AND SHOULD BE REVIEWED THOROUGHLY.

City of Atlanta	STANDARD DETAILS	REV.
		DATE: SEPT 2001
	MODIFIED TYPE "C" CATCH BASIN	ORIG. DATE: NOV 2004
		SCALE: N.T.S.
		DETAIL NO. SW-G_CB002

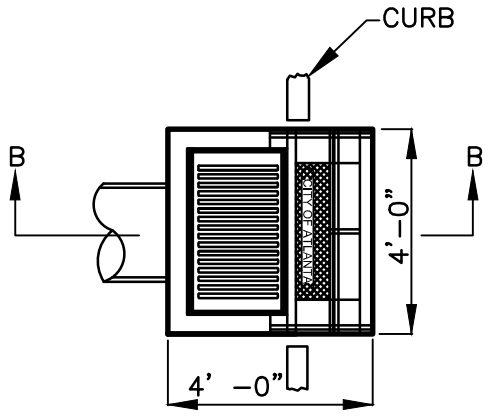

PLAN
SINGLE INSTALLATION

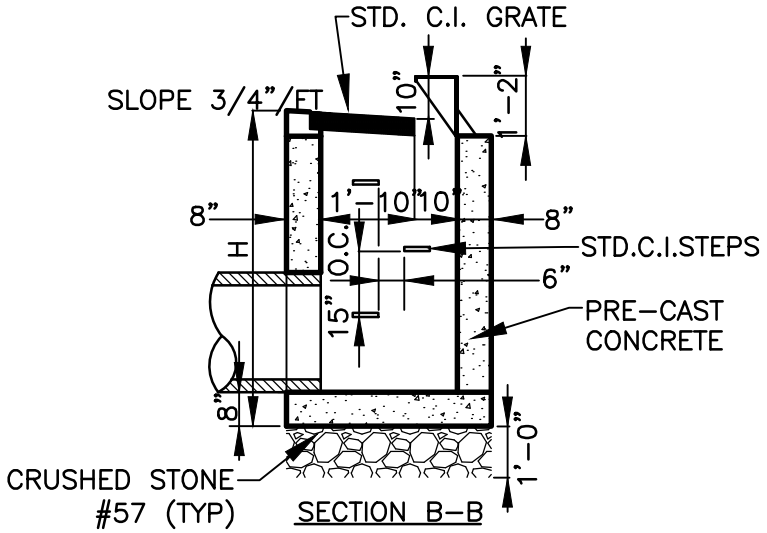

SECTION B-B

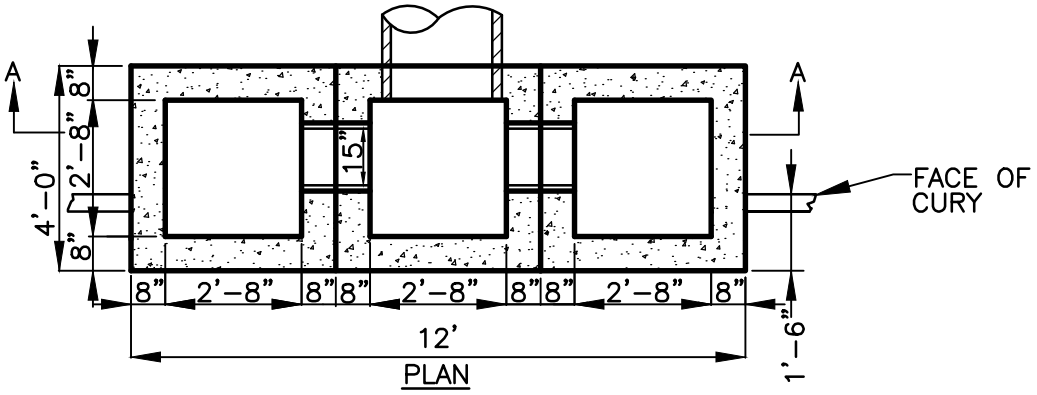

PLAN

NOTE:
CATCH BASINS SHALL HAVE LIVE LOAD RATING OF HS20

MULTIPLE INSTALLATION
W/ HOODS AND GRATES REMOVED

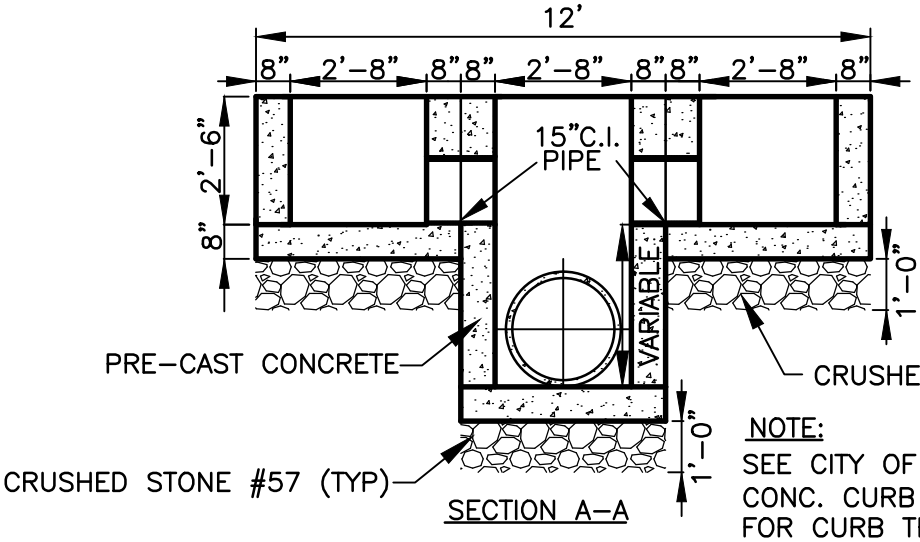

SECTION A-A

NOTE:
SEE CITY OF ATLANTA STD. COMB. CONC. CURB AND GUTTER (8"X30") FOR CURB TRANSITION. SEE DETAIL NO. C-2

THIS DETAIL WAS TAKEN FROM THE CITY OF ATLANTA'S WEBSITE. IT MAY HAVE BEEN MODIFIED AND SHOULD BE REVIEWED THOROUGHLY.

City of Atlanta	STANDARD DETAILS	REV. DATE: SEPT 2011 ORIG. DATE: NOV 2004 SCALE: N.T.S.
	TYPE "B" CATCH BASIN	DETAIL NO. SW-G_CB003

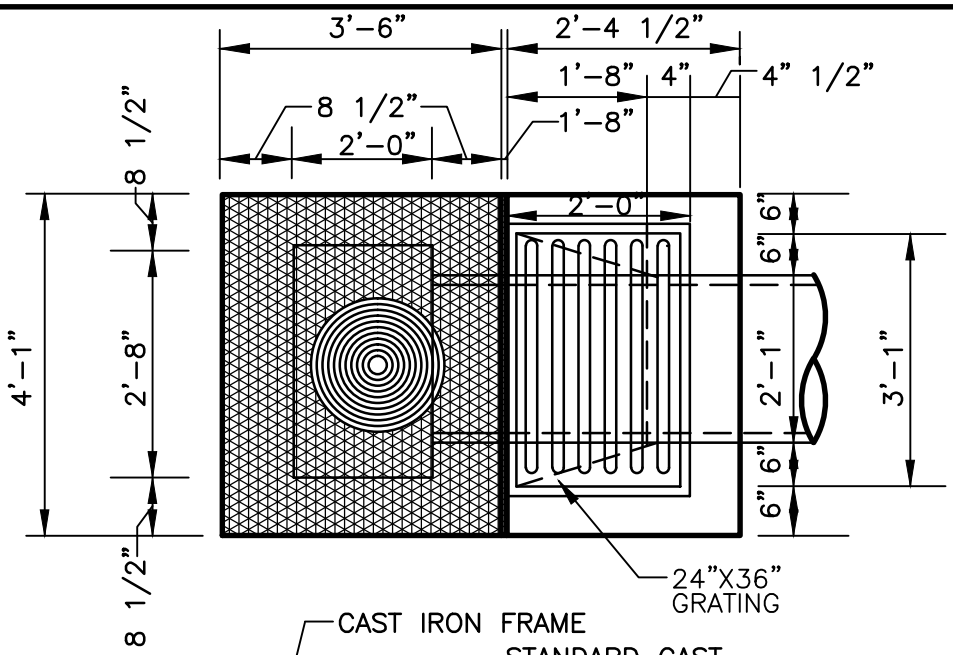

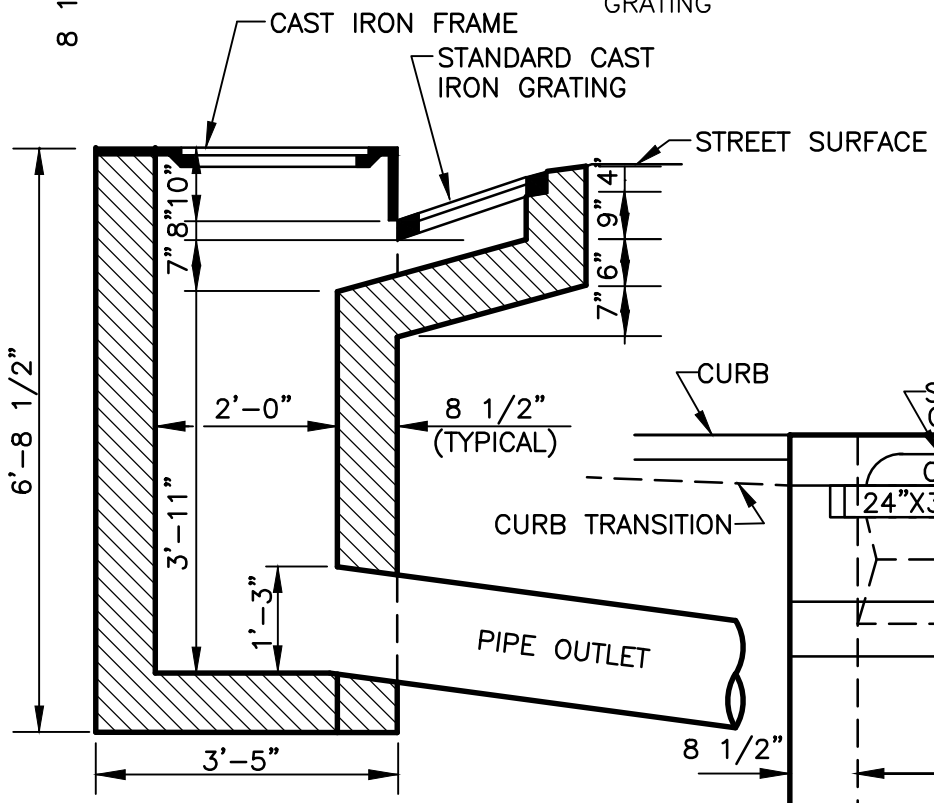

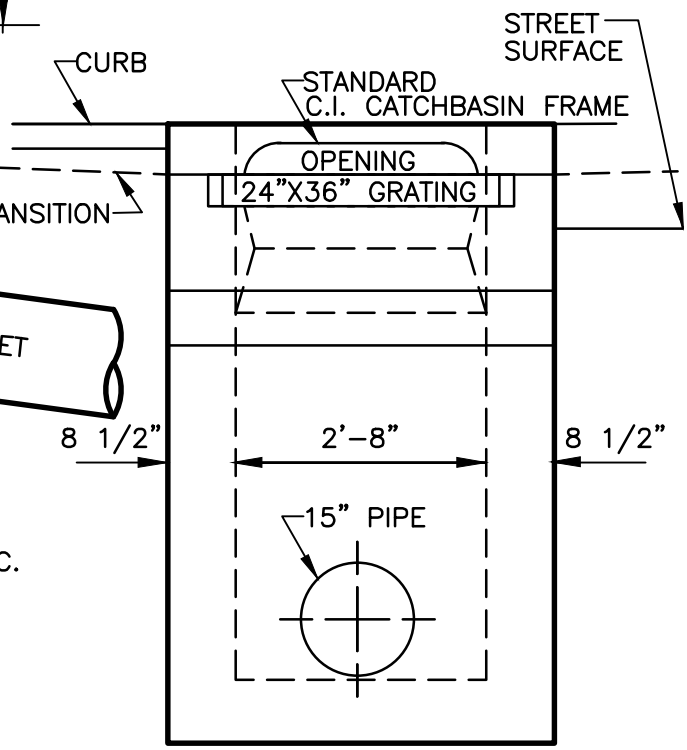

NOTE:

1. SEE CITY OF ATLANTA STANDARD COMB. CONC. CURB AND GUTTER (8"X30").
2. NOT FOR NEW INSTALLATION.

THIS DETAIL WAS TAKEN FROM THE CITY OF ATLANTA'S WEBSITE. IT MAY HAVE BEEN MODIFIED AND SHOULD BE REVIEWED THOROUGHLY.

City of Atlanta Department of Public Works	STANDARD DETAILS	DATE: SEPT 2011 ORIG. DATE: AUG 1973 SCALE: N.T.S.
	STANDARD CURB CATCH BASIN TYPE "A"	DETAIL NO. SW-G_CB004

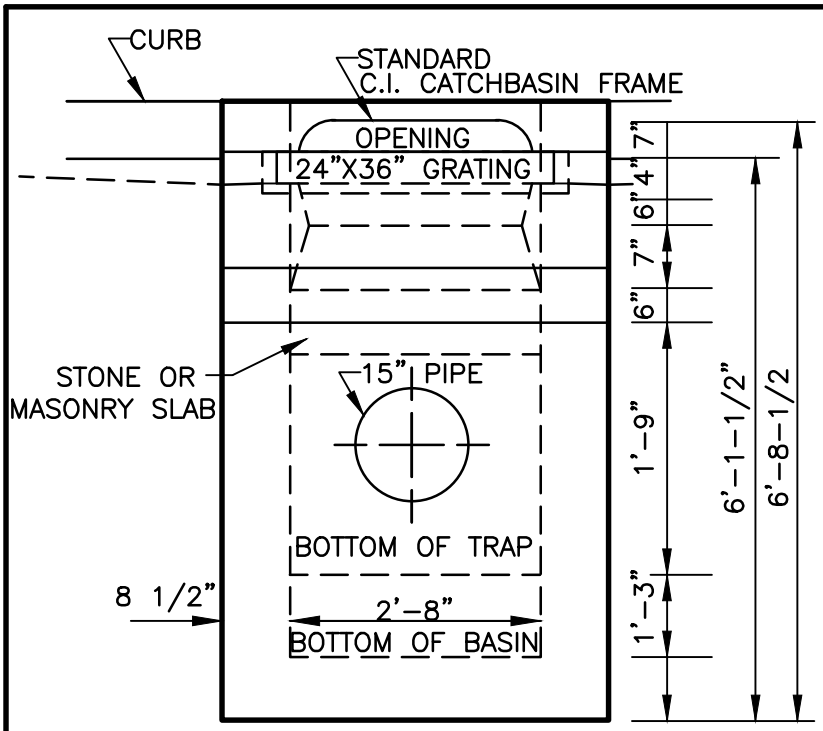

FRONT ELEVATION

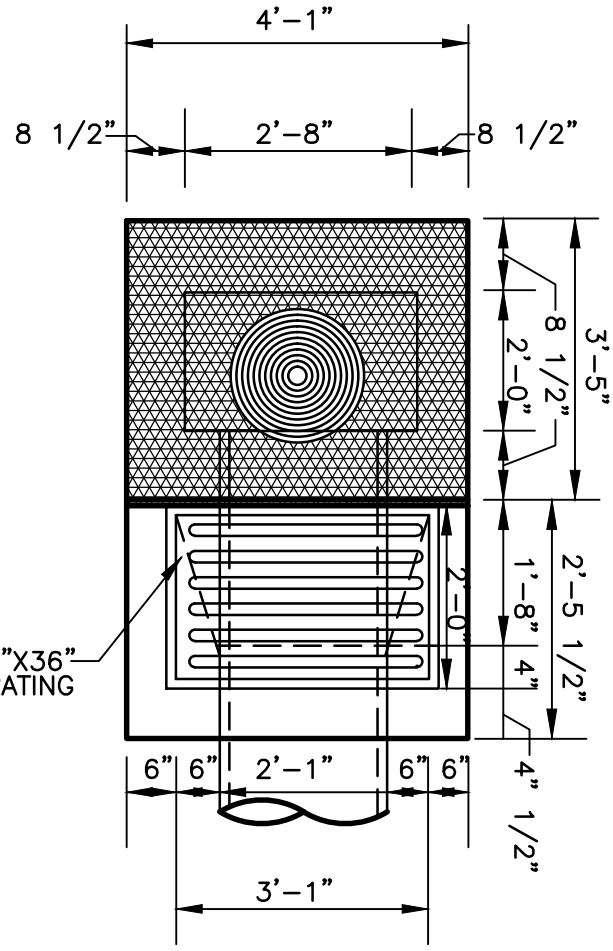

PLAN

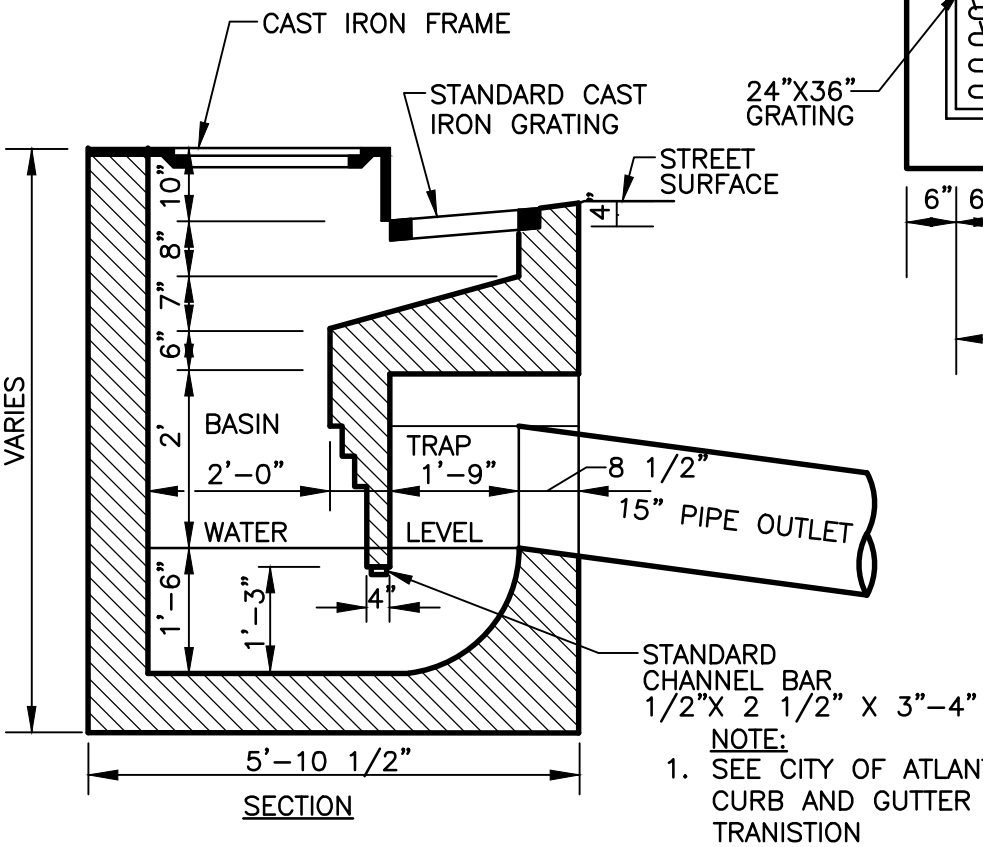

SECTION

NOTE:

1. SEE CITY OF ATLANTA STANDARD COMB. CONC. CURB AND GUTTER (8"X30") FOR CURB TRANISTION
2. NOT FOR NEW INSTALLATION.

THIS DETAIL WAS TAKEN FROM THE CITY OF ATLANTA'S WEBSITE. IT MAY HAVE BEEN MODIFIED AND SHOULD BE REVIEWED THOROUGHLY.

City of Atlanta

STANDARD DETAILS

STANDARD TRAP CATCH BASIN TYPE "A"

REV.
DATE: SEPT 2011
ORIG. DATE: JULY 1966
SCALE: N.T.S.

DETAIL NO. SW-G_CB005

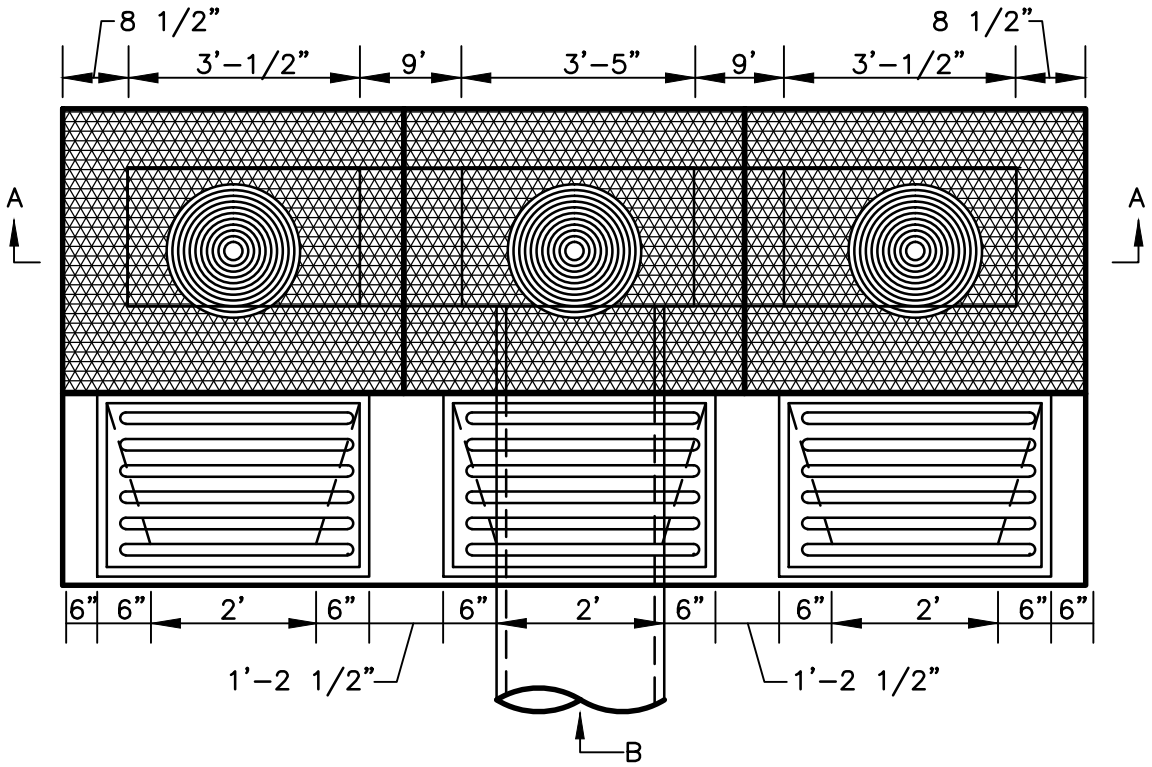

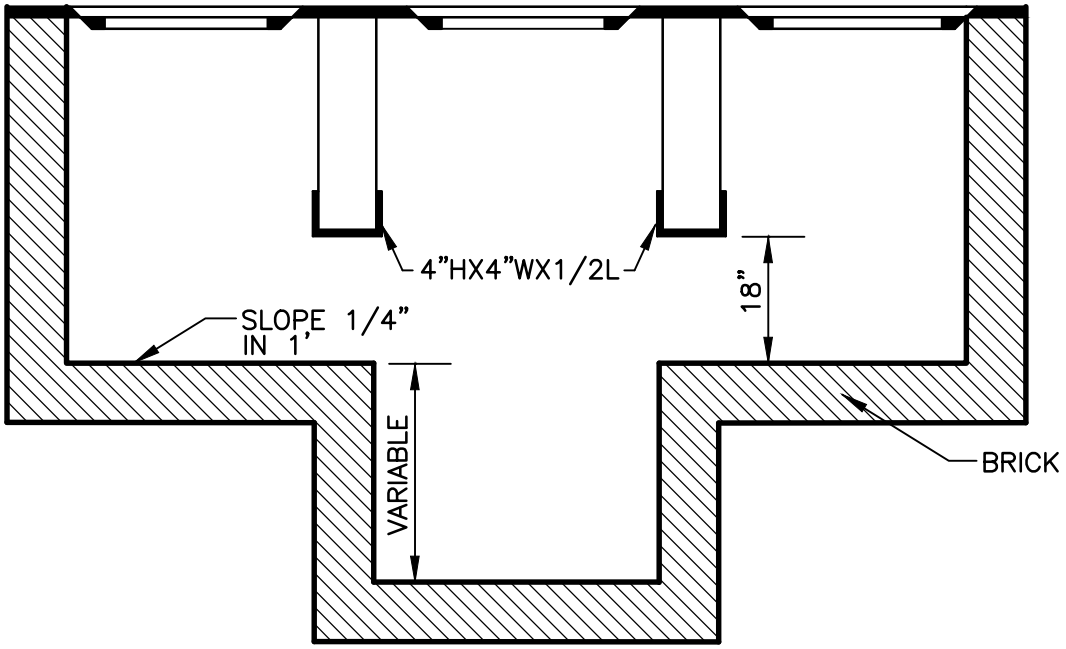

SECTION A–A

NOTE:

1. MATERIALS – BRICK.
2. STANDARD MAY BE MODIFIED TO SUIT ANY REQUIRMENT WITH DESIGN APPROVAL.
3. SEE CITY OF ATLANTA STD. COMB. CONCRETE CURB AND GUTTER (8"X30").

THIS DETAIL WAS TAKEN FROM THE CITY OF ATLANTA'S WEBSITE. IT MAY HAVE BEEN MODIFIED AND SHOULD BE REVIEWED THOROUGHLY.

City of Atlanta
Department of Public Works

STANDARD DETAILS

STANDARD CURB CATCH BASIN 1 OF 2 MULTI. INSTALLATION

DATE: SEPT 2011
ORIG. DATE: AUG 1993
SCALE: N.T.S.

DETAIL NO. SW–G_CB007

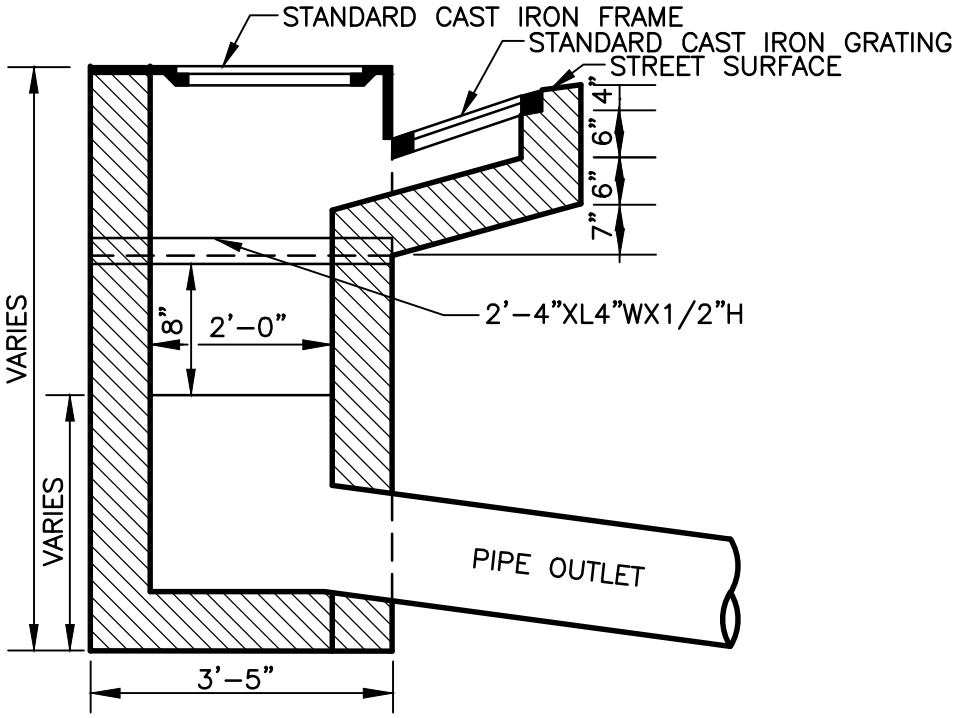

SECTION B-B

NOTE:

1. SEE CITY OF ATL. STD. CURB AND GUTTER (8"X30") FOR CURB TRANSITION.
2. MATERIALS BRICK.
3. STANDARD MAY BE MODIFIED TO SUIT ANY REQUIRMENT WITH DEISGN APPROVAL.

THIS DETAIL WAS TAKEN FROM THE CITY OF ATLANTA'S WEBSITE. IT MAY HAVE BEEN MODIFIED AND SHOULD BE REVIEWED THOROUGHLY.

City of Atlanta	STANDARD DETAILS	REV. DATE: SEPT 2011 ORIG. DATE: JULY 1967 SCALE: N.T.S.
	STANDARD CURB CATCH BASIN 2 OF 2 MULTI. INSTALLATION	DETAIL NO. SW-G_CB009

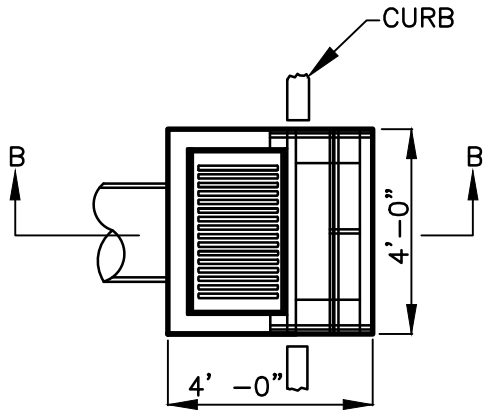

PLAN
SINGLE INSTALLATION

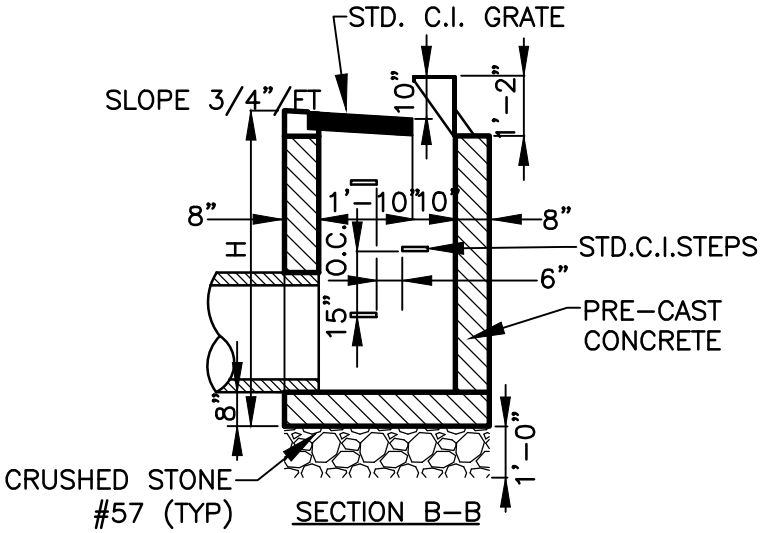

SECTION B-B

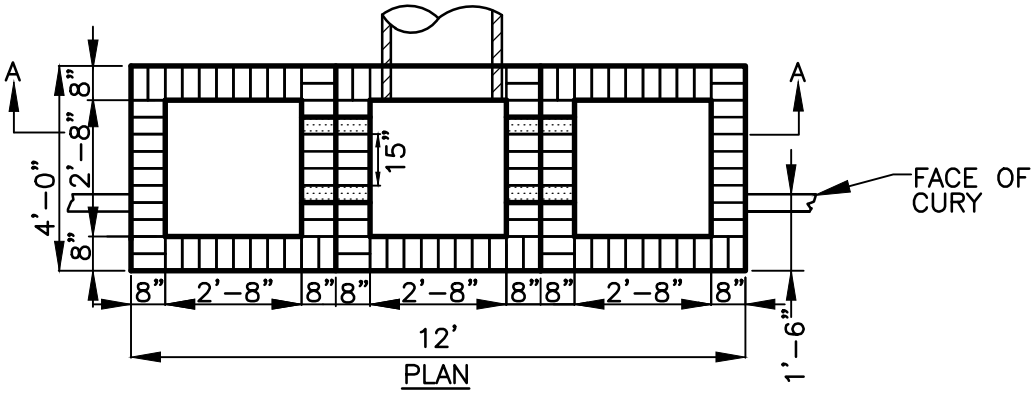

PLAN

MULTIPLE INSTALLATION
W/ HOODS AND GRATES REMOVED

NOTE:
CATCH BASINS SHALL HAVE LIVE LOAD RATING OF HS20

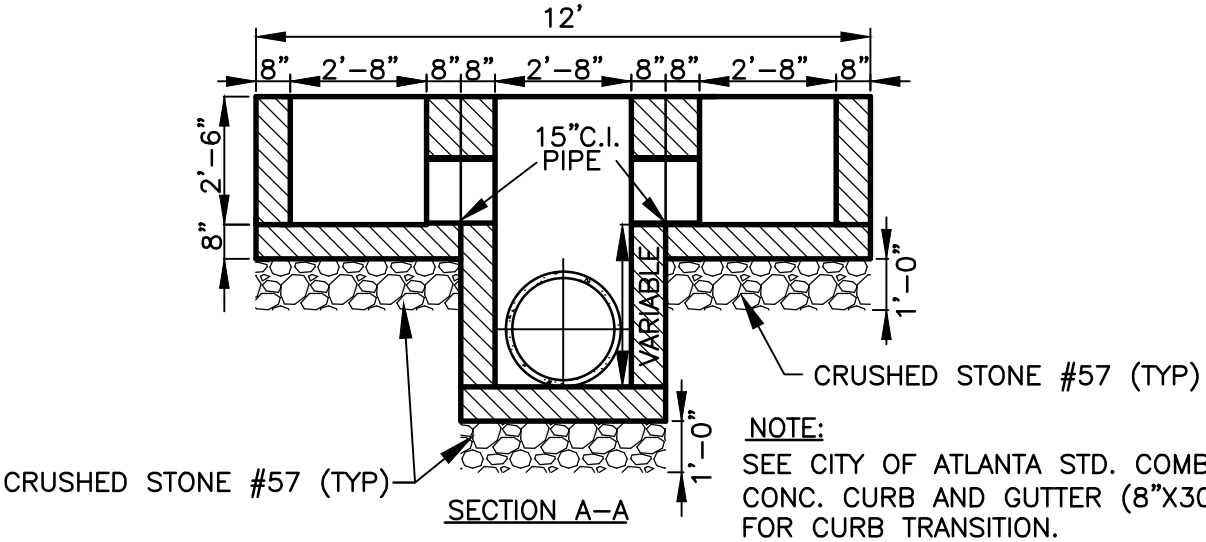

SECTION A-A

NOTE:
SEE CITY OF ATLANTA STD. COMB. CONC. CURB AND GUTTER (8"X30") FOR CURB TRANSITION.

THIS DETAIL WAS TAKEN FROM THE CITY OF ATLANTA'S WEBSITE. IT MAY HAVE BEEN MODIFIED AND SHOULD BE REVIEWED THOROUGHLY.

City of Atlanta	STANDARD DETAILS	REV.
		DATE: SEPT 2011
	TYPE "B" CATCH BASIN	ORIG. DATE: N/A
		SCALE: N.T.S.
		DETAIL NO. SW-G_CB008

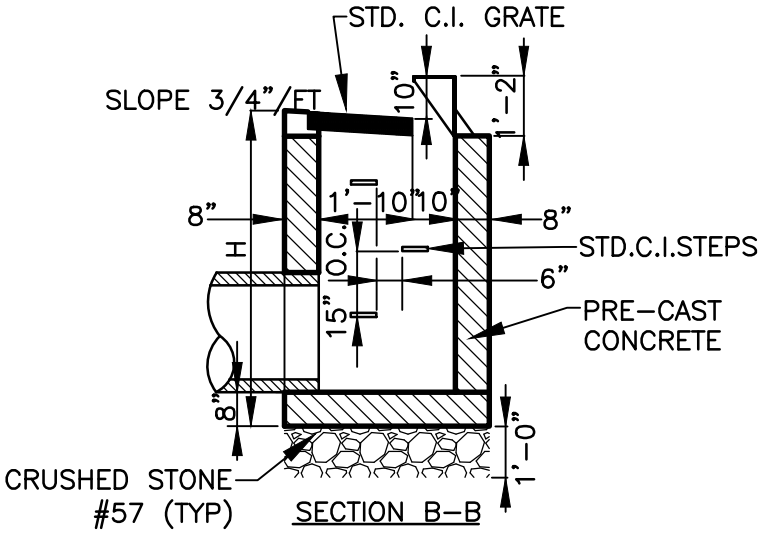

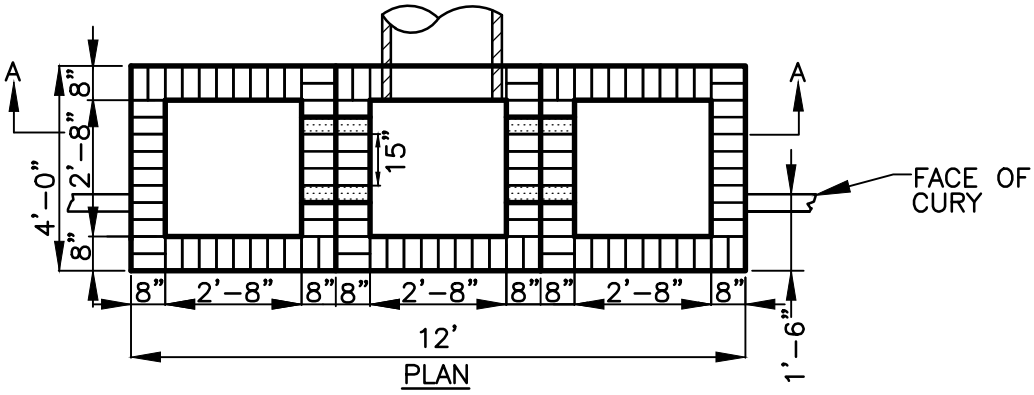

NOTE:
CATCH BASINS SHALL HAVE LIVE LOAD RATING OF HS20

MULTIPLE INSTALLATION
W/ HOODS AND GRATES REMOVED

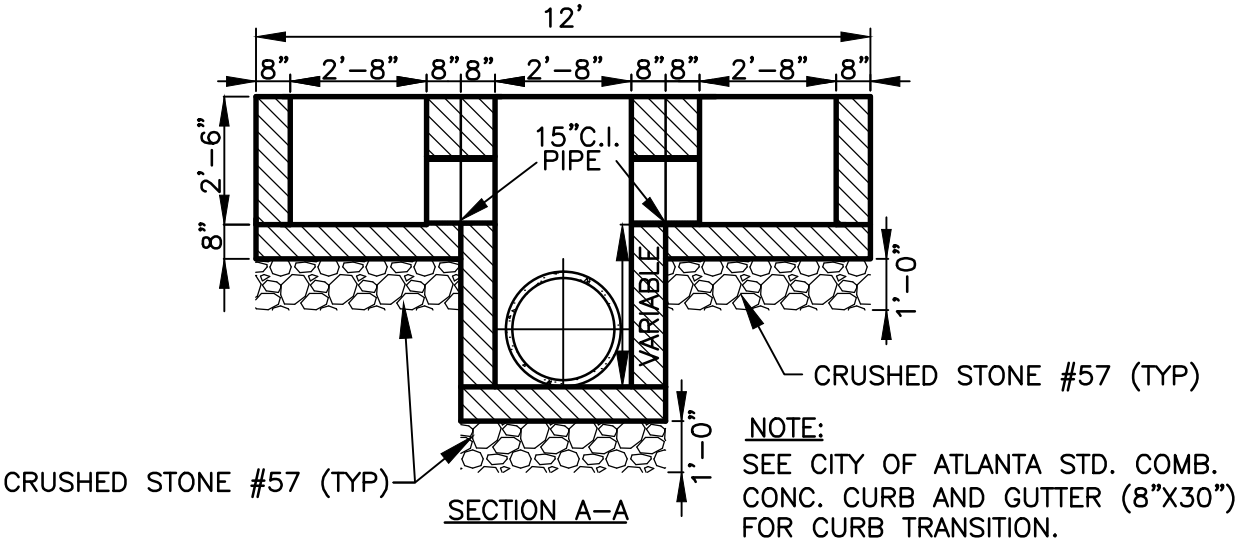

NOTE:
SEE CITY OF ATLANTA STD. COMB. CONC. CURB AND GUTTER (8"X30") FOR CURB TRANSITION.

THIS DETAIL WAS TAKEN FROM THE CITY OF ATLANTA'S WEBSITE. IT MAY HAVE BEEN MODIFIED AND SHOULD BE REVIEWED THOROUGHLY.

City of Atlanta	STANDARD DETAILS	REV.
		DATE: SEPT 2011
	TRIPLE CATCH BASIN TYPE "B" (TRAPPED)	ORIG. DATE: SEPT. 1985
		SCALE: N.T.S.
		DETAIL NO. SW-G_CB010

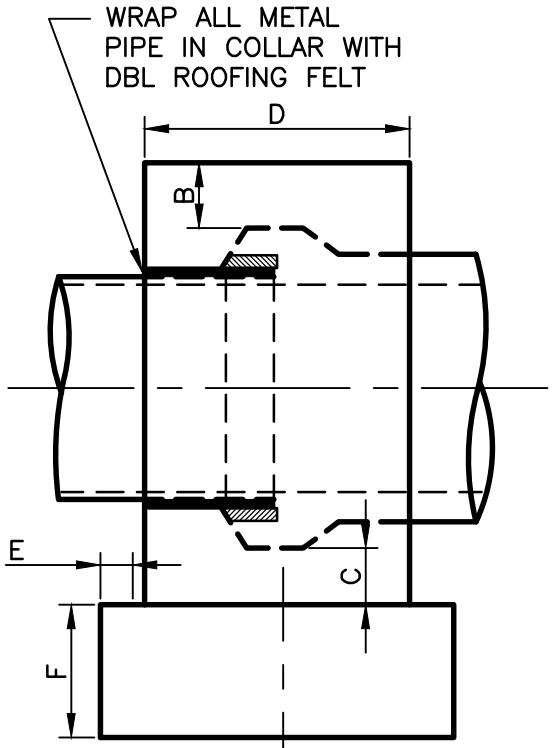

SIDE ELEV.

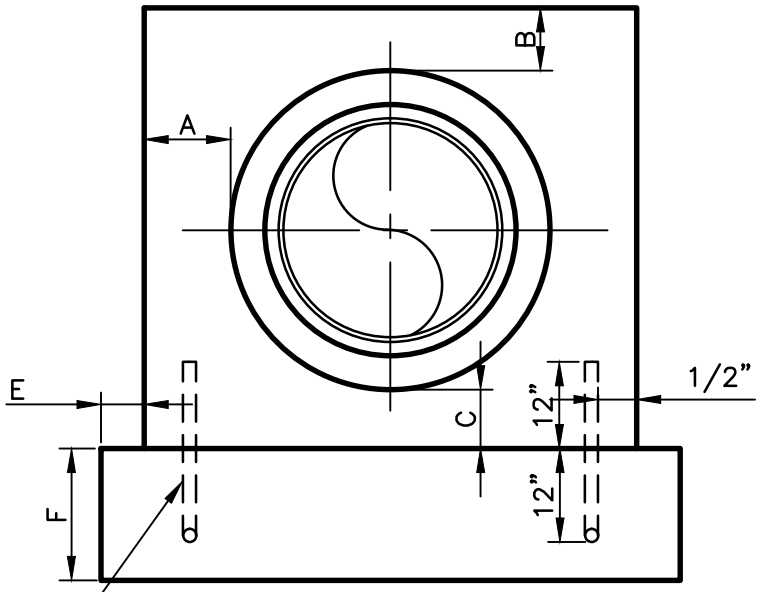

#8 DOIVEL STEEL

END ELEV.

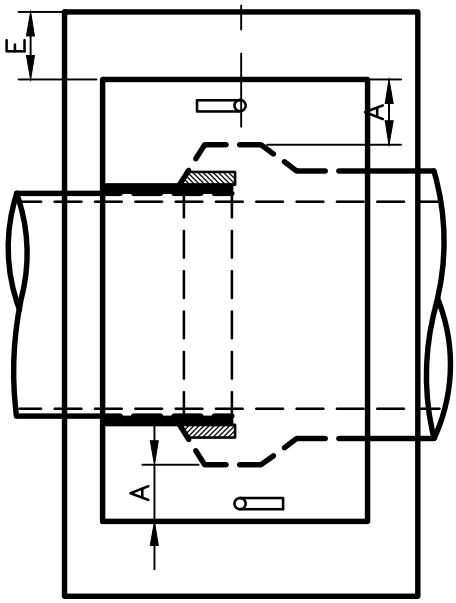

PLAN VIEW

TABLE FOR PIPE SIZE 8" TO 84"

PIPE SIZE	A	B	C	D	E	F
8'–18"	6"	6"	6"	24"	6"	18"
21"–27"	8"	8"	8"	30"	6"	18"
30"–42"	12"	8"	8"	36"	6"	18"
48"–54"	15"	10"	10"	42"	10"	18"

NOTE:
FOR PIPE THRU 18" – NO DOIVELS REQUIRED. CONCRETE TO BE CLASS "A"

THIS DETAIL WAS TAKEN FROM THE CITY OF ATLANTA'S WEBSITE. IT MAY HAVE BEEN MODIFIED AND SHOULD BE REVIEWED THOROUGHLY.

City of Atlanta

STANDARD DETAILS

STANDARD COLLAR WALL

REV.
DATE: SEPT 2011
ORIG. DATE: JULY 1984
SCALE: N.T.S.

DETAIL NO. SW–G_CW001

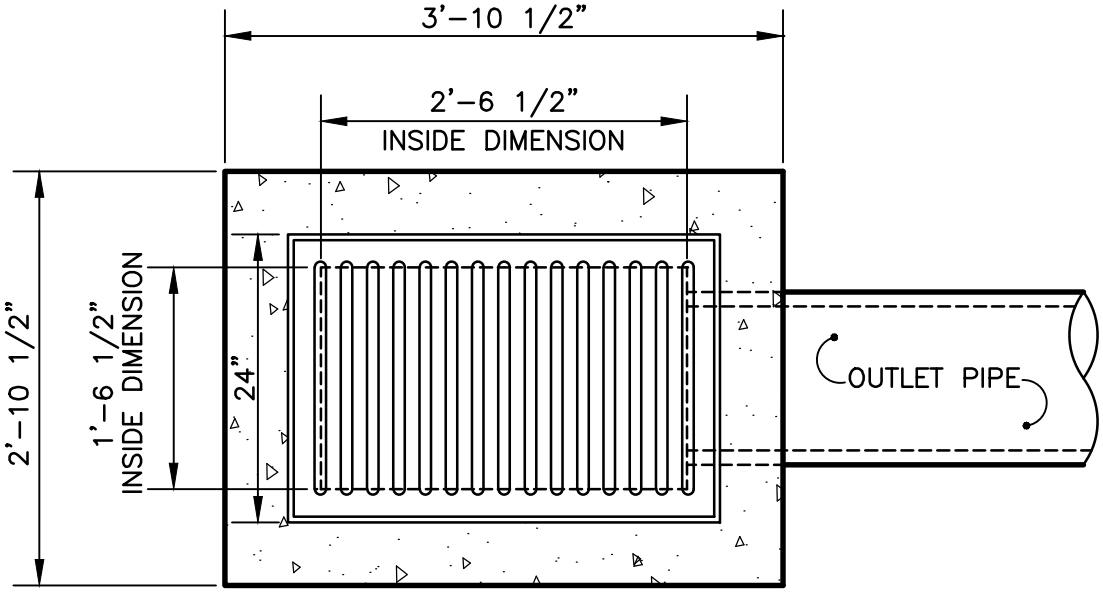

NOTE:
INLET STRUCTURE STRUCTURAL DESIGN SHALL CONFORM TO ACI 318. DESIGN SHALL INCLUDE HS20 TRAFFIC LOADING.

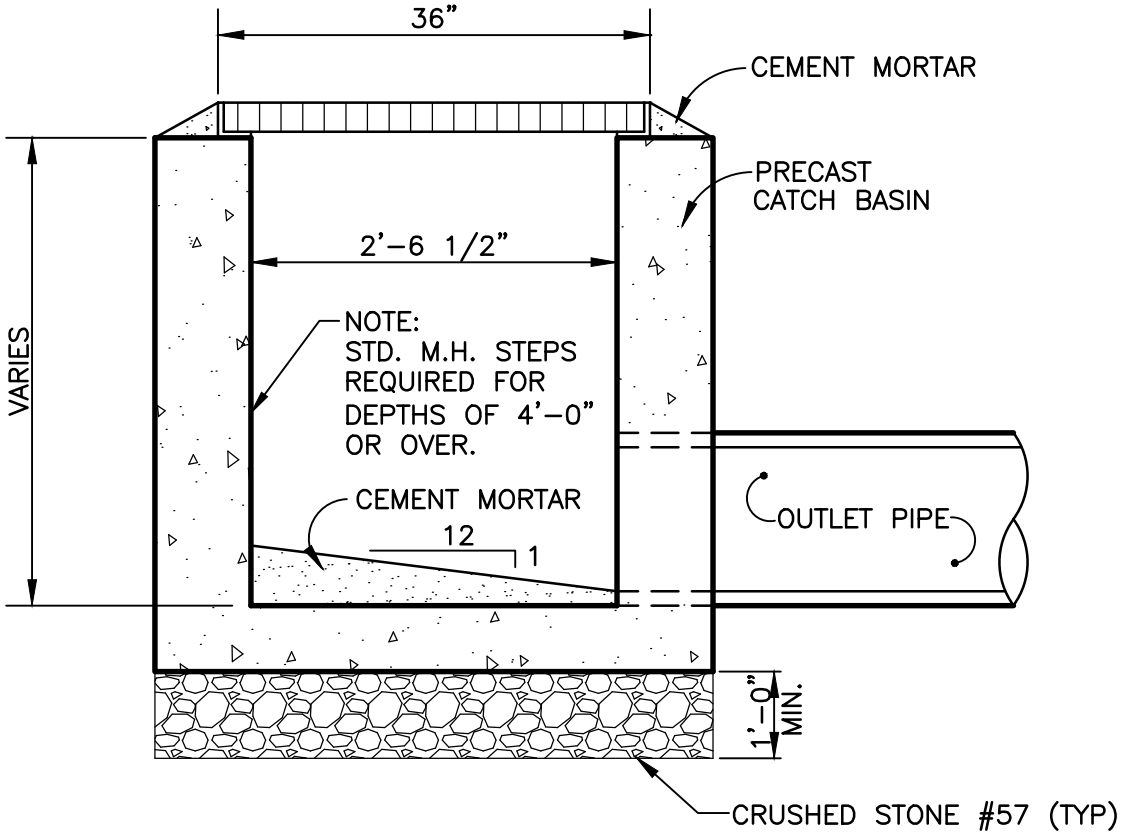

THIS DETAIL WAS TAKEN FROM THE CITY OF ATLANTA'S WEBSITE. IT MAY HAVE BEEN MODIFIED AND SHOULD BE REVIEWED THOROUGHLY.

City of Atlanta	STANDARD DETAILS	REV. DATE: SEPT 2011 ORIG. DATE: NOV 2004 SCALE: N.T.S.
	STANDARD DROP INLET	DETAIL NO. SW–G_DI001A

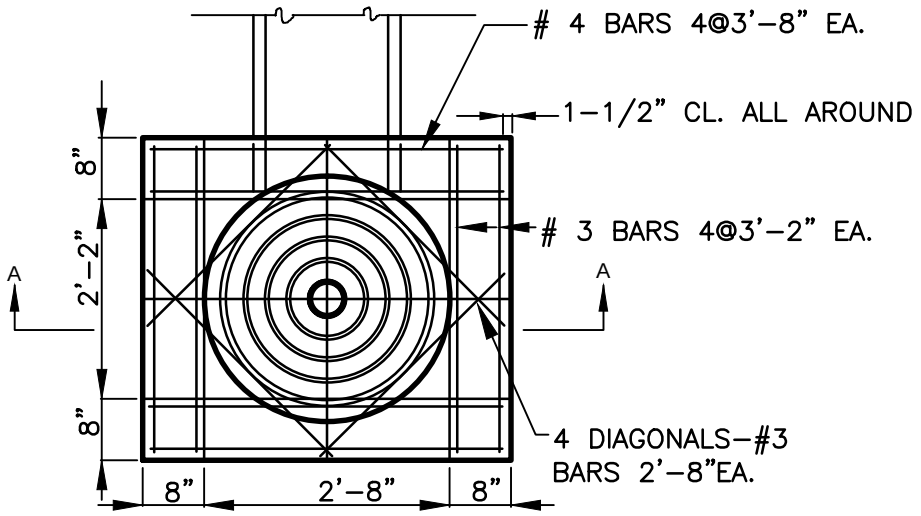

PLAN

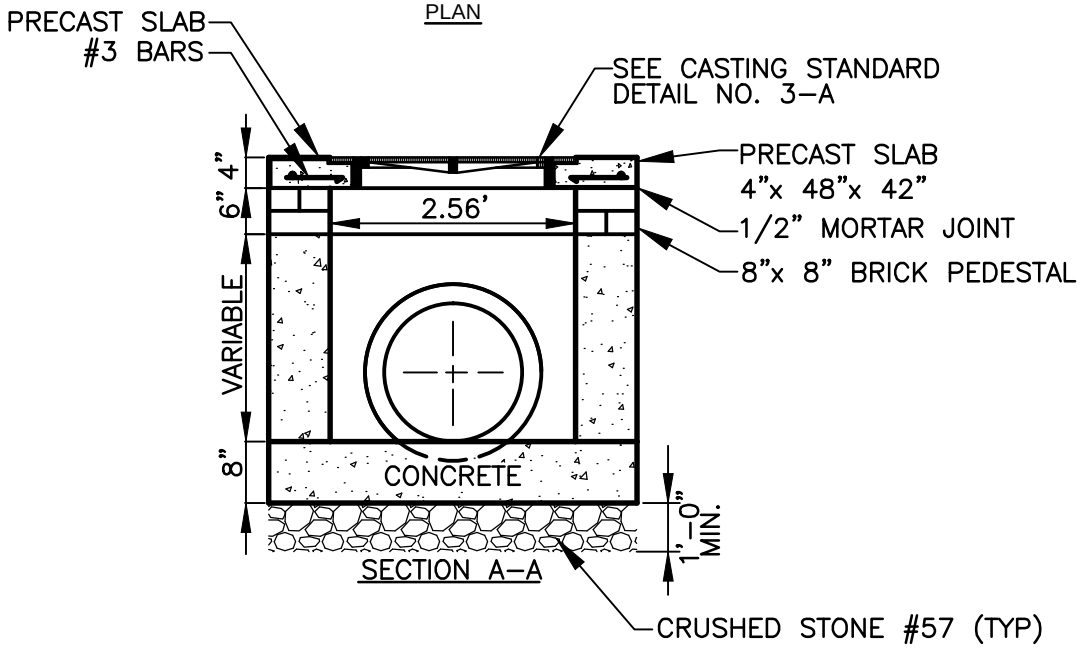

SECTION A-A

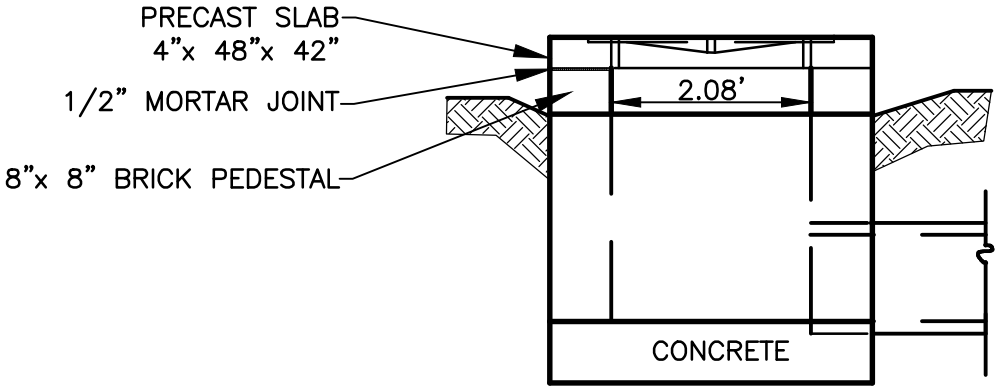

ELEVATION

THIS DETAIL WAS TAKEN FROM THE CITY OF ATLANTA'S WEBSITE. IT MAY HAVE BEEN MODIFIED AND SHOULD BE REVIEWED THOROUGHLY.

City of Atlanta	STANDARD DETAILS	REV. DATE: SEPT 2011 ORIG. DATE: NOV 2004 SCALE: N.T.S.
	STANDARD DROP INLET YARD INLET	DETAIL NO. SW-G_DI002

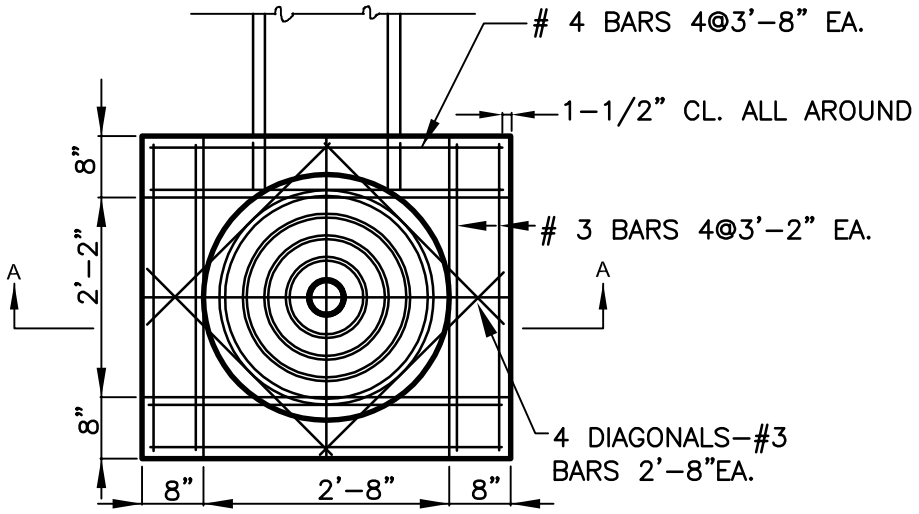

PLAN

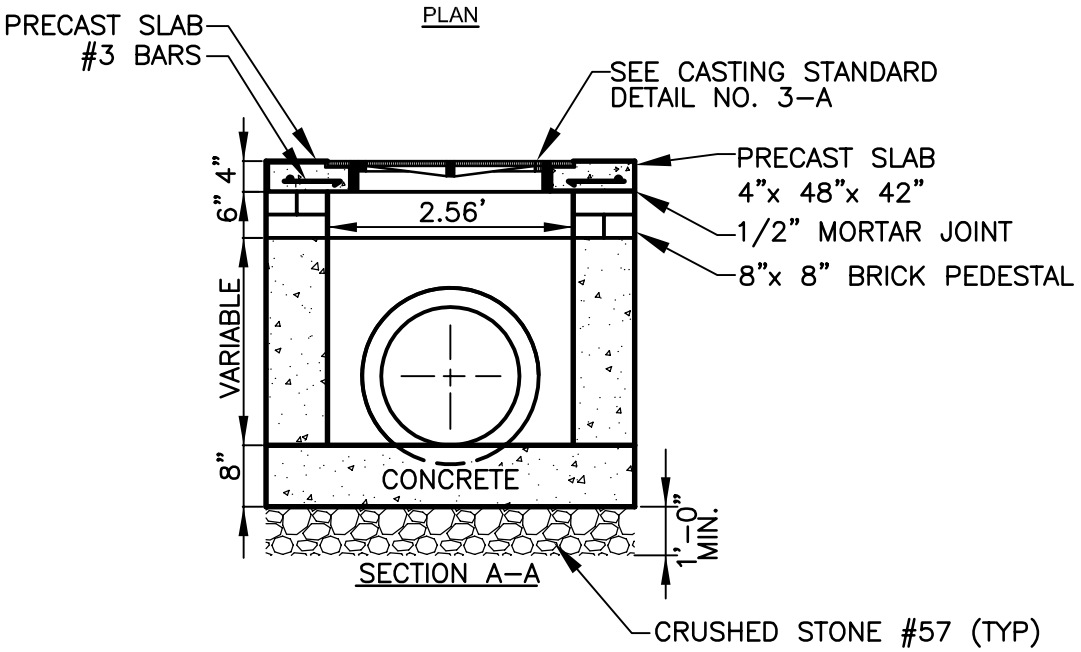

SECTION A-A

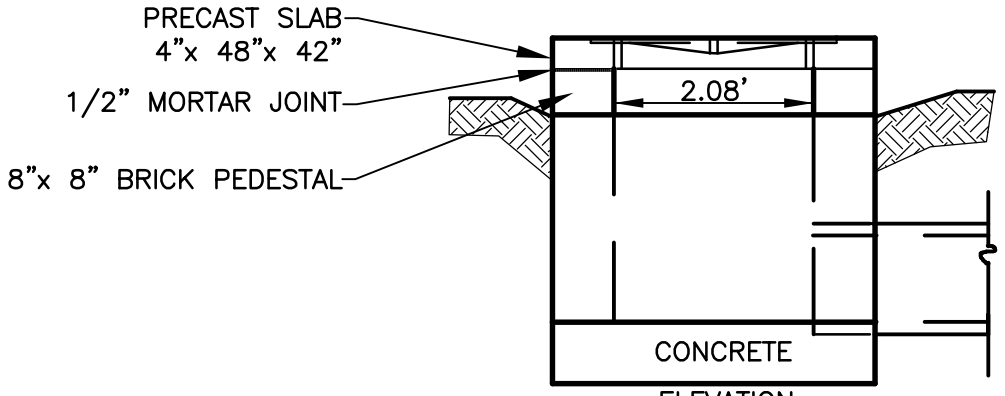

ELEVATION

NOTE:
NOT FOR USE IN PUBLIC RIGHT-OF-WAY

THIS DETAIL WAS TAKEN FROM THE CITY OF ATLANTA'S WEBSITE. IT MAY HAVE BEEN MODIFIED AND SHOULD BE REVIEWED THOROUGHLY.

City of Atlanta	STANDARD DETAILS	REV. DATE: SEPT 2011 ORIG. DATE: NOV 2004 SCALE: N.T.S.
	STANDARD AREA INLET	DETAIL NO. SW-G_DI002

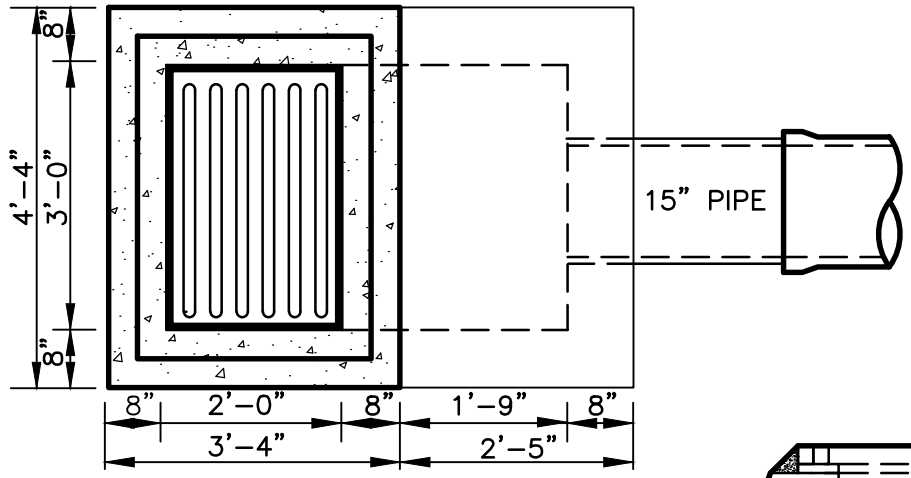

PLAN

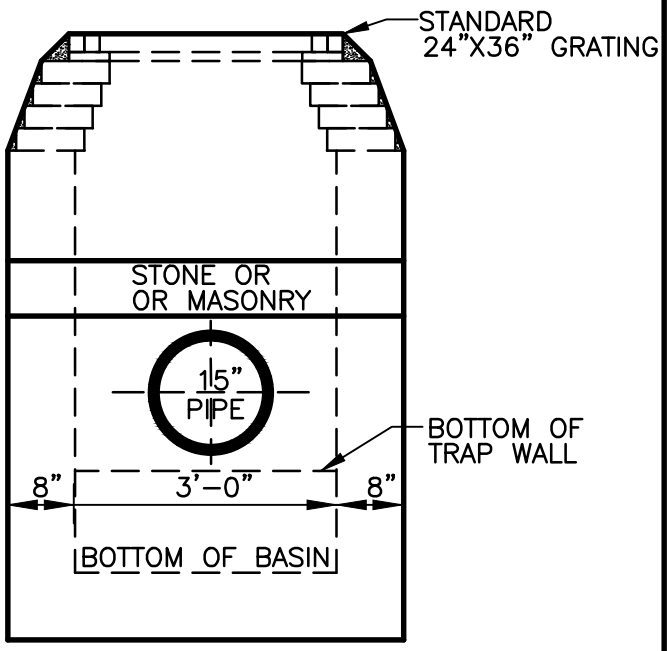

FRONT ELEVATION

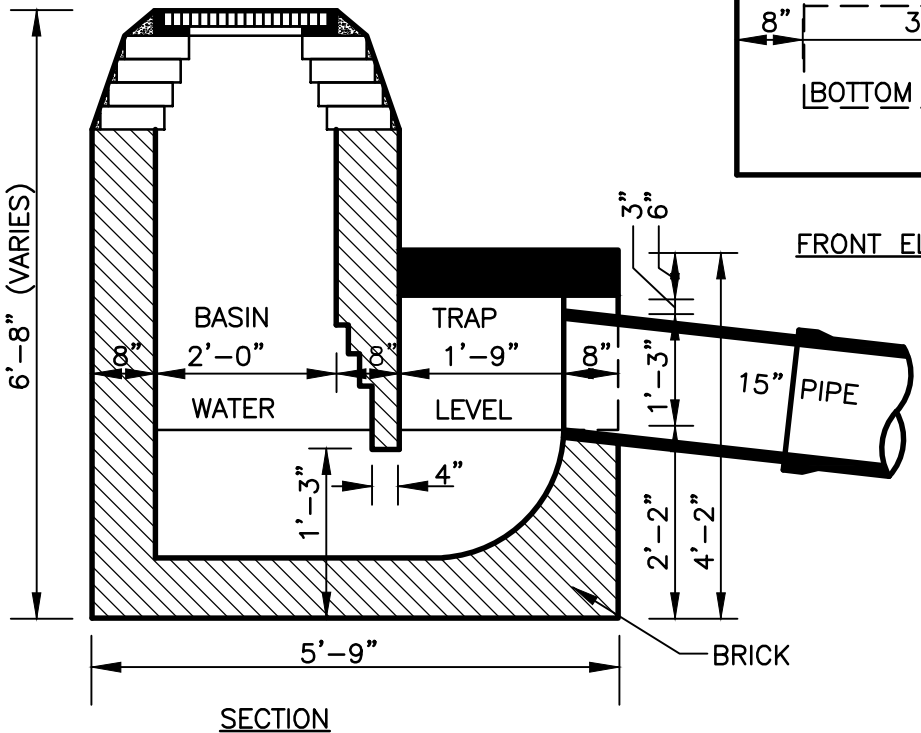

SECTION

THIS DETAIL WAS TAKEN FROM THE CITY OF ATLANTA'S WEBSITE. IT MAY HAVE BEEN MODIFIED AND SHOULD BE REVIEWED THOROUGHLY.

City of Atlanta	STANDARD DETAILS	REV.
		DATE: SEPT 2011
	STANDARD DROP INLET (TRAPPED)	ORIG. DATE: JULY 1984
		SCALE: N.T.S.
		DETAIL NO. SW-G_DI004

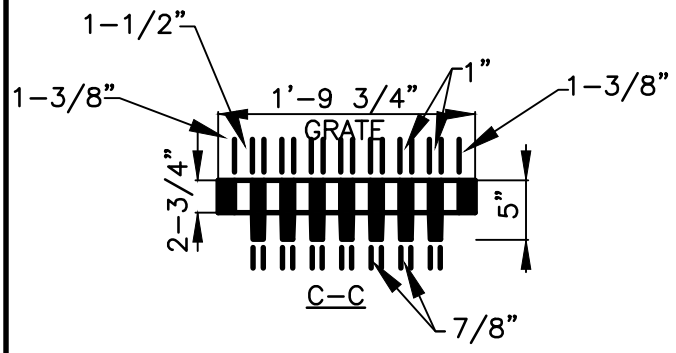

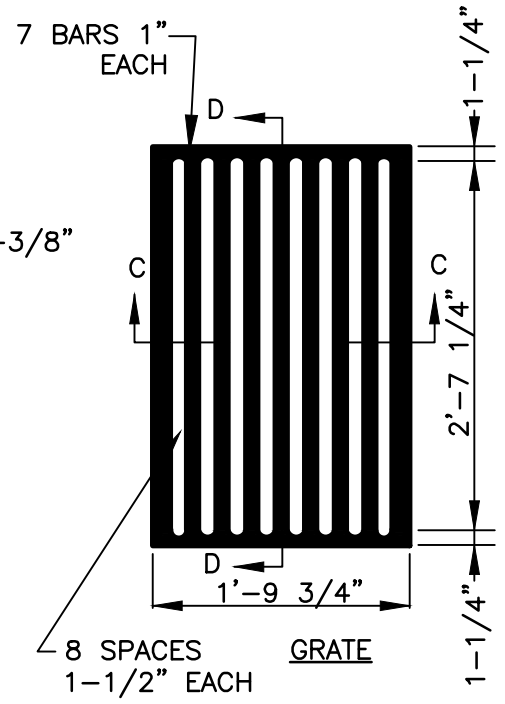

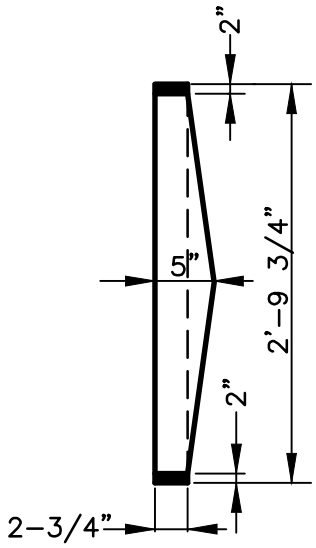

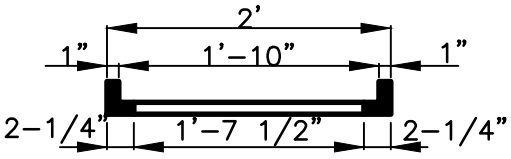

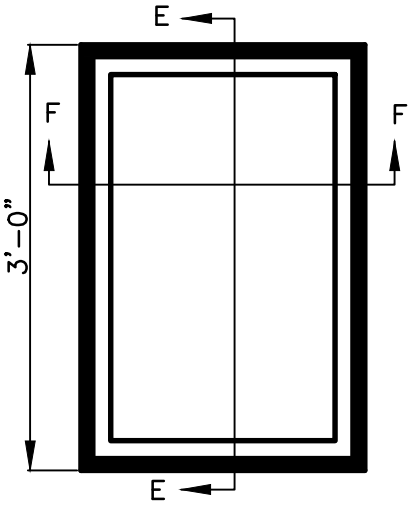

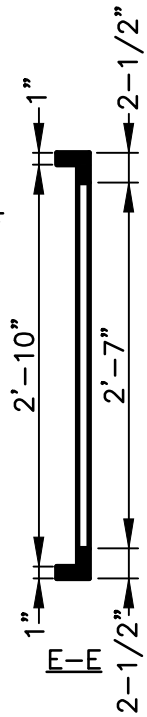

EST.WT. 330 LBS. GRATE EST.WT.
180 LBS. FRAME
TOTAL 510 LBS.

NOTE:

1. GRATE AND GRATE FRAME TO BE IRON CASTING, A.S.T.M SPECIFICATION NUMBER A48-CL30
2. GRATE AND FRAME MUST BE FITTED BEFORE LEAVING SHOP.
3. TOLERANCE: 1/16 " PER 24"

THIS DETAIL WAS TAKEN FROM THE CITY OF ATLANTA'S WEBSITE. IT MAY HAVE BEEN MODIFIED AND SHOULD BE REVIEWED THOROUGHLY.

City of Atlanta	STANDARD DETAILS	REV.
		DATE: SEPT 2011
	STANDARD GRATE AND FRAME	ORIG. DATE: JAN 1997
		SCALE: N.T.S.
		DETAIL NO. SW-G_GR001

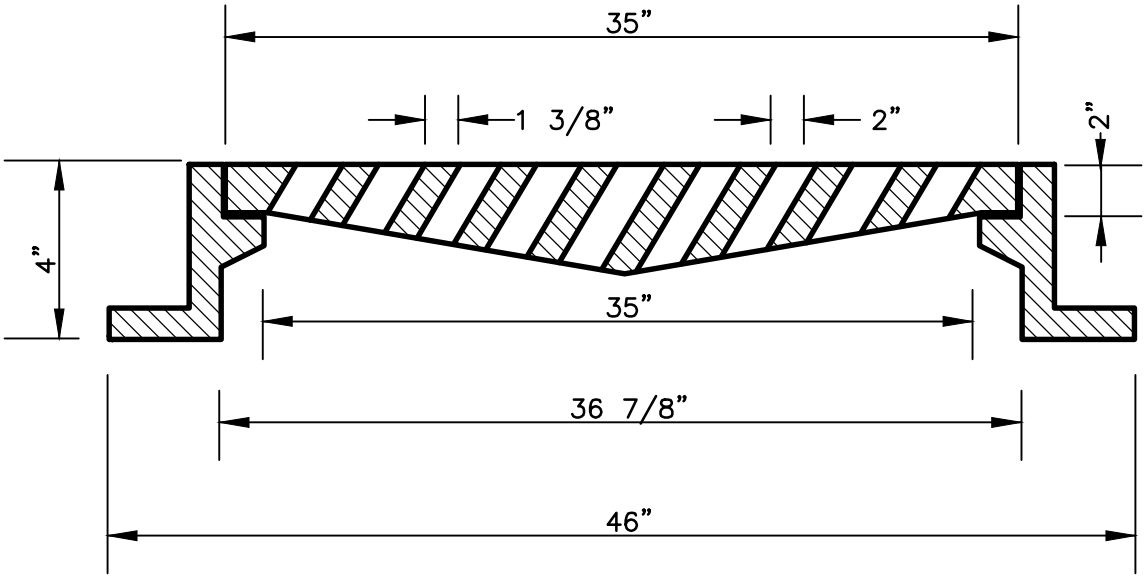

LONGITUDINAL SECTION

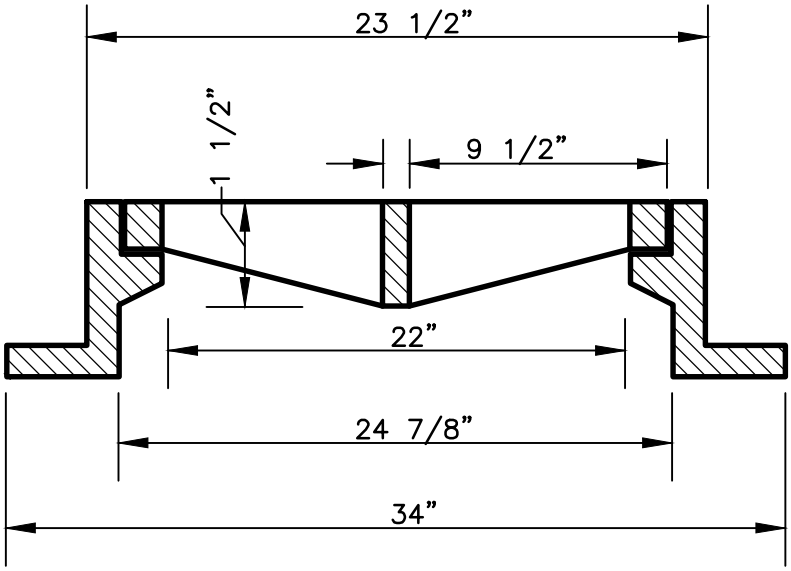

SECTION

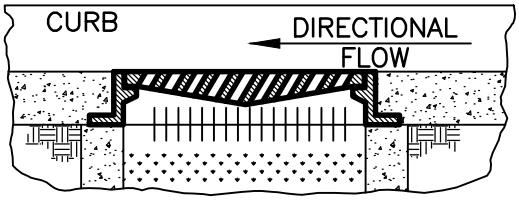

NOTE:
1. TOTAL WEIGHT 550 LB.

THIS DETAIL WAS TAKEN FROM THE CITY OF ATLANTA'S WEBSITE. IT MAY HAVE BEEN MODIFIED AND SHOULD BE REVIEWED THOROUGHLY.

City of Atlanta	STANDARD DETAILS	REV.
		DATE: SEPT 2011
	BICYCLE SAFETY GRATE	ORIG. DATE: JAN 1997
		SCALE: N.T.S.
		DETAIL NO. SW–G_GR005

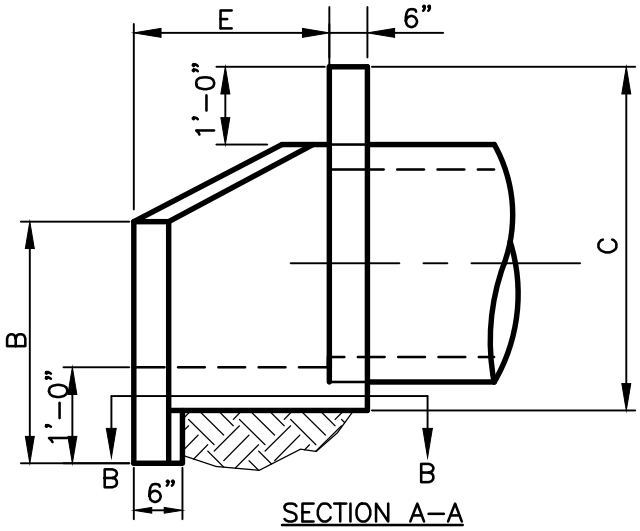

SECTION A–A

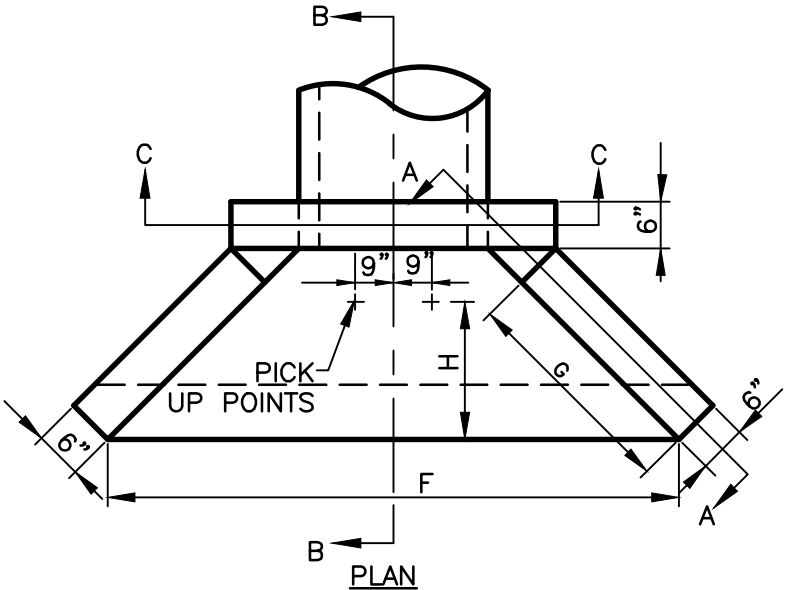

PLAN

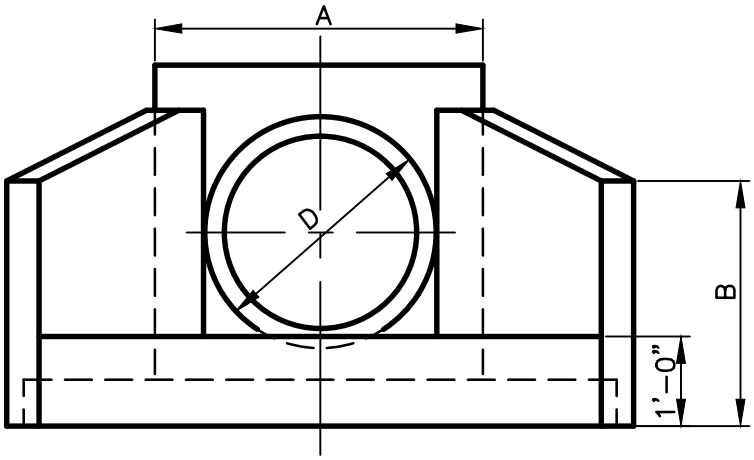

ELEVATION

THIS DETAIL WAS TAKEN FROM THE CITY OF ATLANTA'S WEBSITE. IT MAY HAVE BEEN MODIFIED AND SHOULD BE REVIEWED THOROUGHLY.

City of Atlanta	STANDARD DETAILS	REV.
	STD. PRECAST CONCRETE HEADWALL 18"–36" PIPE SHEET 1 OF 3	DATE: SEPT 2011 ORIG. DATE: JULY 1984 SCALE: N.T.S.
		DETAIL NO. SW–G_HW001

VARIABLE DIMENSIONS (CONCRETE PIPE)								
INSIDE DIA PIPE	AREA PIPE OPENING	A	B	C	D	E	F	G
18"	1.76	3'–5"	2'–4"	3'–4 1/2"	2'–0"	1'–5"	4'–10"	2'–0"
21"	2.40	3'–8 1/2"	2'–6"	3'–8"	2'–3 1/2"	1'–6"	5'–3 1/2"	2'–1 1/2"
24"	3.14	4'–0"	2'–9"	3'–11"	2'–7"	1'–8"	5'–11"	2'–4 1/2"
30"	4.91	4'–6 1/2"	3'–1"	4'–5 1/2"	3'–11 1/2"	2'–0"	7'–1 1/2"	2'–10"
36"	7.07	5'–1"	3'–5"	5'–0"	3'–8"	2'–4"	8'–4"	3'–3 1/2"

H	WT	BASE AREA
1'–0 1/4"	1753	8.30
1'–0 7/8"	2020	9.40
1'–1 3/4"	2383	11.80
1'–3 7/8"	3182	15.10
1'–6"	4089	19.60

VARIABLE DIMENSIONS (METAL PIPE–WHERE SPECIFICATIONS PERMIT)								
INSIDE DIA PIPE	AREA PIPE OPENING	A	B	C	D	E	F	G
18"	1.76	3'–2"	2'–3"	3'–2"	1'–9"	1'–4"	4'–5"	1'–10 1/2"
21"	2.40	3'–5"	2'–5"	3'–5"	2'–0"	1'–5"	4'–10"	2'–0"
24"	3.14	3'–8"	2'–7"	3'–8"	2'–3"	1'–7"	5'–5"	2'–3"
30"	4.91	4'–2"	2'–11"	4'–2"	2'–9"	1'–11"	6'–7"	2'–8 1/2"
36"	7.07	4'–8"	3'–3"	4'–8"	3'–3"	2'–3"	7'–9"	3'–2 1/4"

H	WT	BASE AREA
0'–11 3/4"	1549	7.34
1'–0 1/4"	1778	8.32
1'–1 1/4"	2108	9.90
1'–3 1/4"	2834	13.50
1'–5 3/8"	3678	17.65

THIS DETAIL WAS TAKEN FROM THE CITY OF ATLANTA'S WEBSITE. IT MAY HAVE BEEN MODIFIED AND SHOULD BE REVIEWED THOROUGHLY.

City of Atlanta

STANDARD DETAILS

STD. PRECAST CONCRETE HEADWALL 18"–36" PIPE
SHEET 2 OF 3

REV.
DATE: SEPT 2011
ORIG. DATE: JULY 1984
SCALE: N.T.S.

DETAIL NO. SW–G_HW001

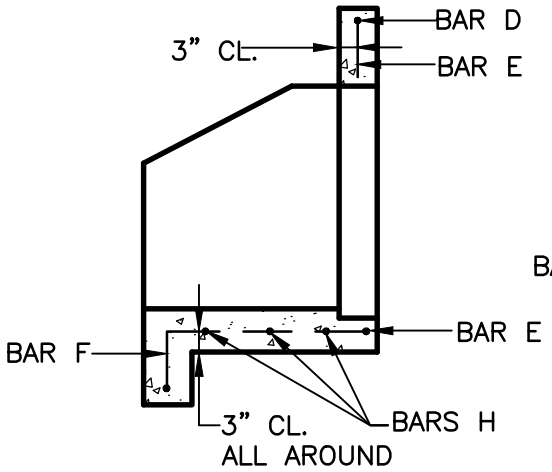

SECTION B–B

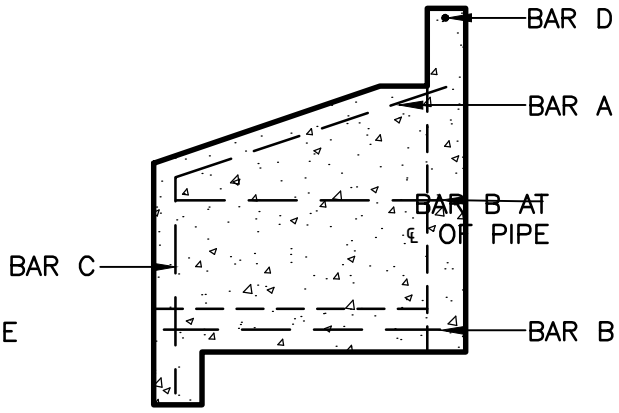

SECTION A–A

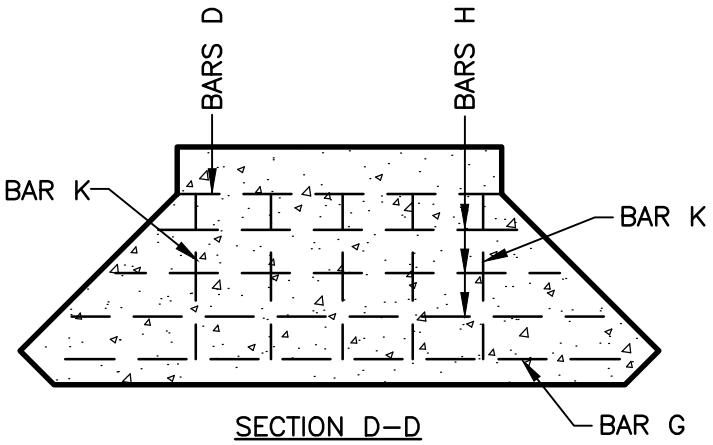

SECTION D–D

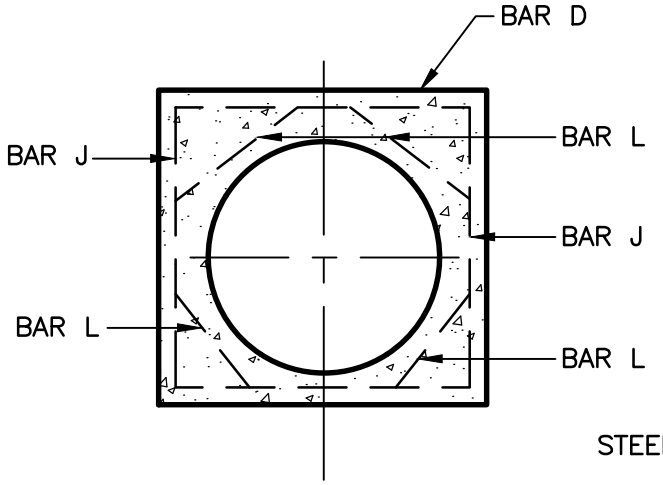

SECTION C–C

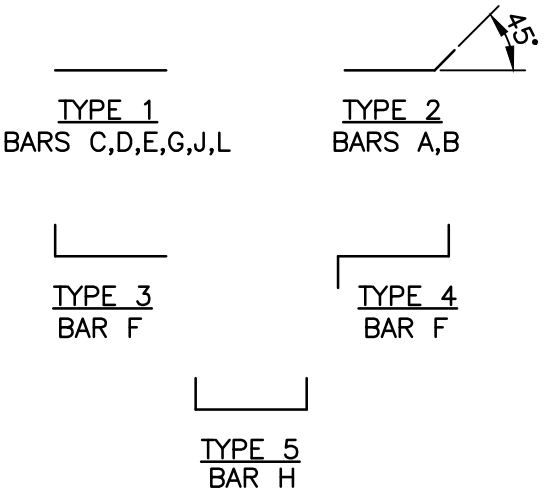

BAR REINE DETAILS

N.T.S. REINFORCED
STEEL TO BE 1/2" ø BARS

THIS DETAIL WAS TAKEN FROM THE CITY OF ATLANTA'S WEBSITE. IT MAY HAVE BEEN MODIFIED AND SHOULD BE REVIEWED THOROUGHLY.

City of Atlanta

STANDARD DETAILS

STD. PRECAST CONCRETE HEADWALL 18"–36" PIPE
SHEET 3 OF 3

REV.
DATE: SEPT 2011
ORIG. DATE: JULY 1984
SCALE: N.T.S.

DETAIL NO. SW–G_HW001

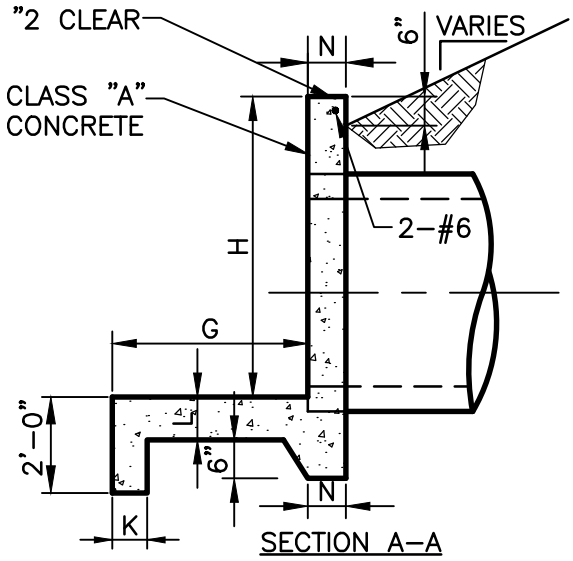

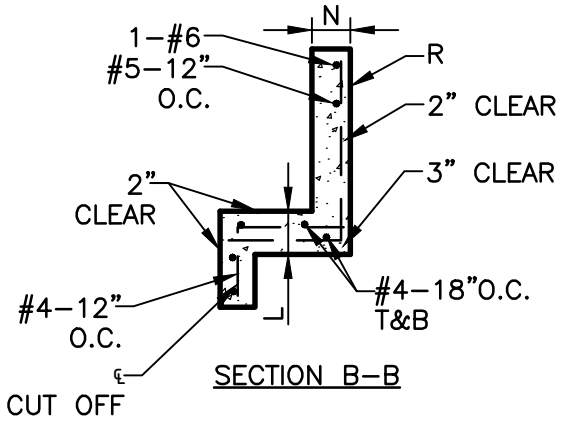

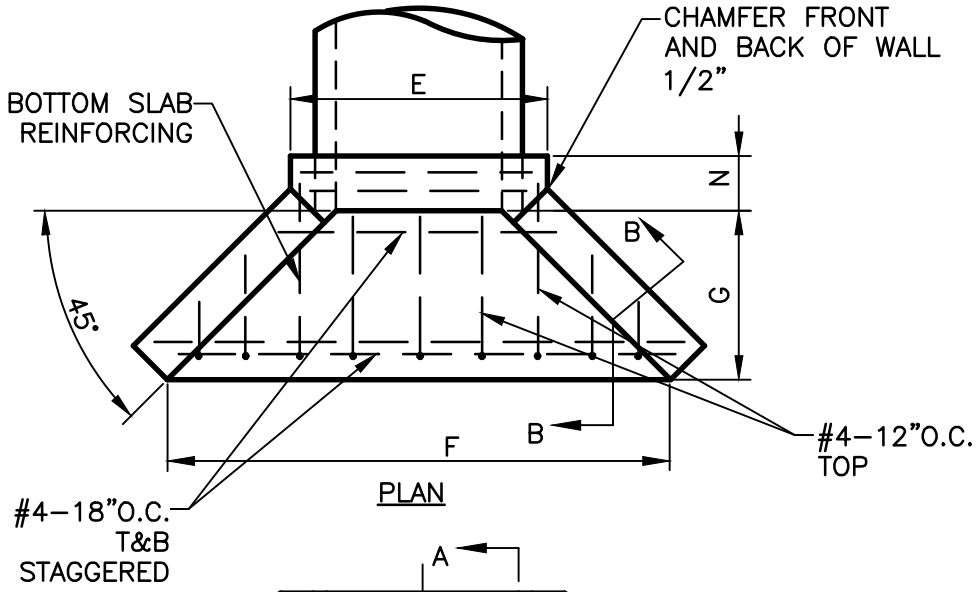

NOTE:
EXPOSED EDGES TO BE CHAMFERED 1"X1"

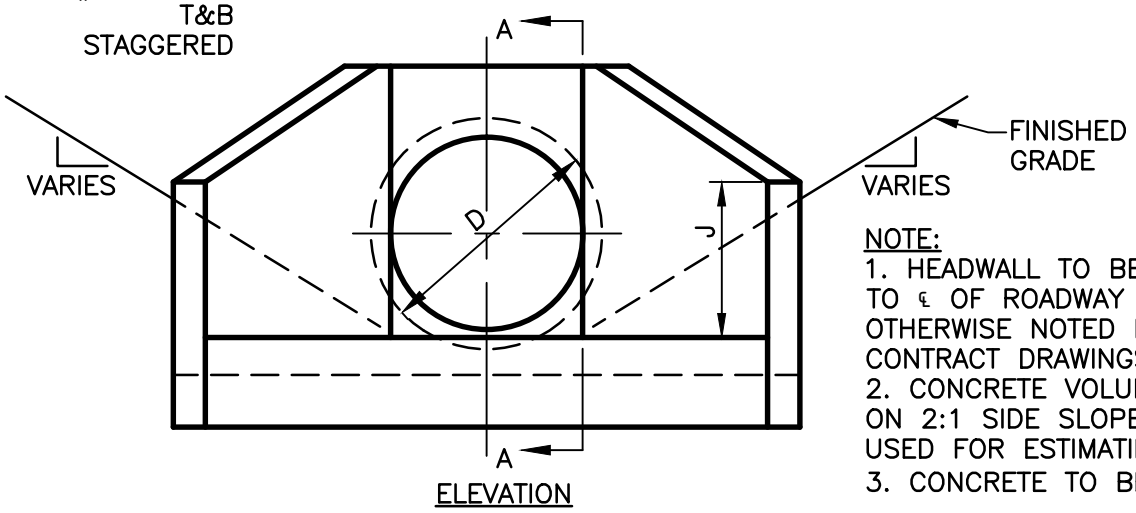

NOTE:
1. HEADWALL TO BE PARALLEL TO ℄ OF ROADWAY UNLESS OTHERWISE NOTED IN CONTRACT DRAWINGS.
2. CONCRETE VOLUME BASED ON 2:1 SIDE SLOPES TO BE USED FOR ESTIMATING ONLY.
3. CONCRETE TO BE CLASS "A"

THIS DETAIL WAS TAKEN FROM THE CITY OF ATLANTA'S WEBSITE. IT MAY HAVE BEEN MODIFIED AND SHOULD BE REVIEWED THOROUGHLY.

City of Atlanta	STANDARD DETAILS	REV.
		DATE: SEPT 2011
	STNADARD HEADWALL	ORIG. DATE: JULY 1984
	SHEET 1 OF 2	SCALE: N.T.S.
		DETAIL NO. SW-G_HW002

D	E	F	G	H	J	K	L	N	R	N
18" 21"	3'–0" 3'–4"	7'–6" 7'–9"	3'–0"	3'–0" 3'–3"	2'–0" 2'–0"	8"	8"	8"	#5–12"O.C.	1.70 1.80
24" 27"	3'–8" 3'–11"	8'–0" 8'–3"	3'–0"	3'–6" 3'–9"	2'–0" 2'–0"	8"	8"	8"	#5–12"O.C.	1.90 2.00
30"	4'–2"	8'–6"	3'–0"	4'–0"	2'–1"±	8"	8"	10"	#5–12"O.C.	2.85
36"	4'–8"	10'–0"	3'–6"	4'–6"	2'–3"	8"	10"	10"	#5–12"O.C.	3.15
42"	5'–3"	11'–6"	4'–0"	5'–0"	2'–9"	8"	10"	10"	#5–12"O.C.	3.87
48"	5'–10"	13'–0"	4'–6"	5'–6"	3'–0"	8"	10"	10"	#5–12"O.C.	5.08
54"	6'–5"	14–6"	5'–0"	6'–0"	3'–3"	9"	12"	12"	#6–8"O.C.	6.50
60"	7'–0"	16'–0"	5'–6"	6'–6"	3'–6"	9"	12"	12"	#6–8"O.C.	7.98
66"	7'–7"	17'–6"	6'–0"	7'–0"	3'–9"	9"	12"	14"	#6–8"O.C.	9.14
72"	8'–2"	19'–0"	6'–6"	7'–6"	4'–3"	9"	12"	14"	#6–8"O.C.	11.10

* BASED ON 2:1 CHANNEL SIDE SLOPES

THIS DETAIL WAS TAKEN FROM THE CITY OF ATLANTA'S WEBSITE. IT MAY HAVE BEEN MODIFIED AND SHOULD BE REVIEWED THOROUGHLY.

City of Atlanta

STANDARD DETAILS

STNADARD HEADWALL
SHEET 2 OF 2

REV.
DATE: SEPT 2011
ORIG. DATE: JULY 1984
SCALE: N.T.S.

DETAIL NO. SW–G_HW002

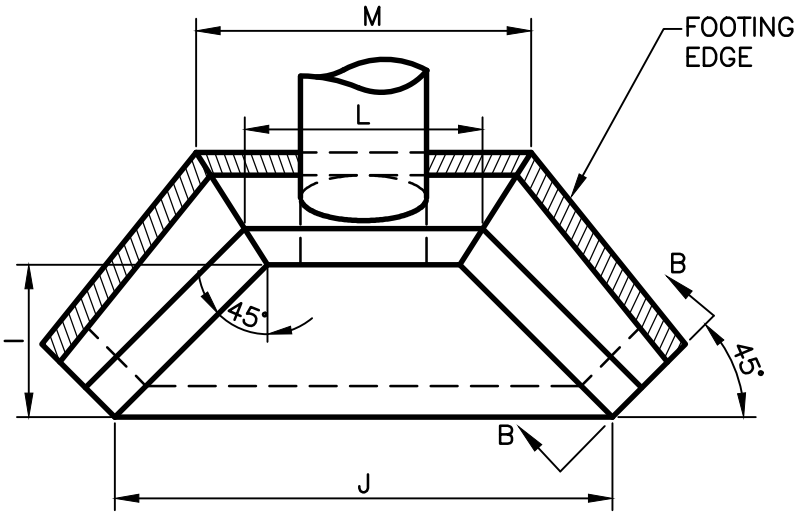

PLAN

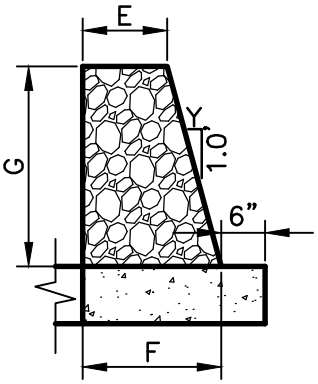

SECTION B–B

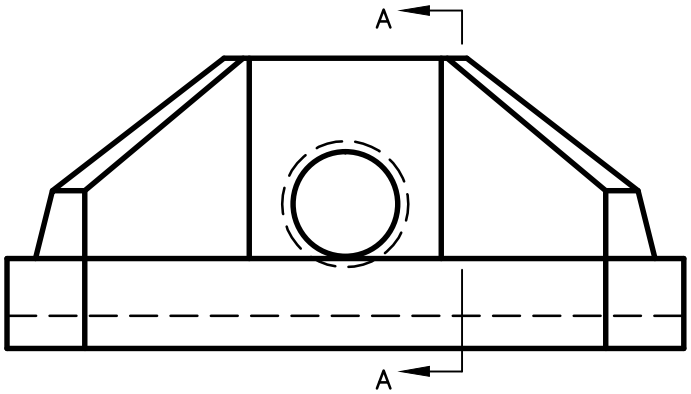

ELEVATION

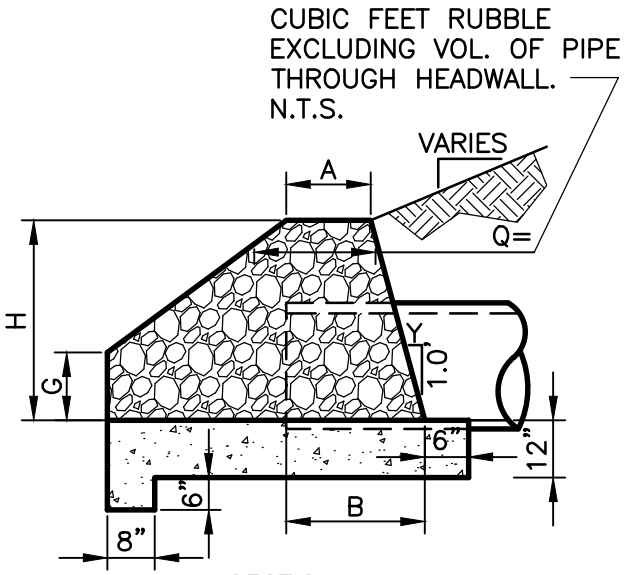

SECTION A–A

STONE SHALL BE:
1.QUARRIED, CLEAN, SOUND, DURABLE AND OF QUALITY AND FORM TO MAKE NEAT SUBSTANTIAL WORK OF THIS CLASS.
2. THOROUGHLY CLEANED OF EARTH AND DUST.
3. BEDDED IN CEMENT MORTAR WITH EVERY SPACE AND JOINT FILLED WITH MORTAR.
4. PLACED IN SUCH A MANNER AS NOT TO HAVE MORE BUILD THAN BED.

MORTAR SHALL:
1. CONSIST OF ONE PART CEMENT TO THREE PARTS SAND
2. NOT TO BE USED WHEN IT HAS BEEN MIXED MORE THAN 45 MINUTES.
3. NOT TO BE RETEMPERED.

CONCRETE SHALL:
1. BE EARLY 3,000 P.S.I. FOR FOOTINGS AND APRONS.

THIS DETAIL WAS TAKEN FROM THE CITY OF ATLANTA'S WEBSITE. IT MAY HAVE BEEN MODIFIED AND SHOULD BE REVIEWED THOROUGHLY.

City of Atlanta	STANDARD DETAILS	REV. DATE: SEPT 2011 ORIG. DATE: JULY 1984 SCALE: N.T.S.
	STANDARD RUBBLE HEADWALL SHEET 1 OF 2	DETAIL NO. SW–G_HW003

D	Q	A	B	H	G	E	F	K	I	L
12"	18.4	12"	1'–4"	2'–8"	12"	12"	1'–3"	3'–0"	2'–6"	3'–8"
15"	21.9	12"	1'–6"	2'–10"	12"	12"	1'–3"	3'–3"	3'–0"	4'–0"
18"	31.8	12"	1'–9"	3'–2"	12"	12"	1'–3"	3'–6"	3'–0"	4'–3"
21"	33.4	12"	1'–11"	3'–8"	1'–2"	12"	1'–4"	3'–9"	3'–0"	4'–6"
24"	39.9	1'–6"	2'–1"	4'–0"	1'–6"	12"	1'–4"	4'–0"	3'–0"	4'–9"
30"	54.2	1'–6"	2'–4"	4'–6"	1'–8"	12"	1'–6"	4'–6"	3'–0"	5'–9"
36"	69.3	1'–6"	2'–7"	5'–1"	2'–0"	1'–3"	1'–8"	5'–0"	3'–6"	6'–3"
42"	81.8	1'–6"	2'–9"	5'–5"	2'–6"	1'–3"	1'–8"	6'–0"	4'–0"	6'–9"
48"	98.6	1'–6"	3'–0"	5'–10"	2'–8"	1'–6"	1'–9"	6'–6"	4'–6"	7'–3"
54"	120.6	1'–6"	3'–3"	6'–4"	3'–0"	1'–6"	1'–9"	7'–0"	5'–0"	7'–9"
60"	155.5	1'–6"	3'–7"	7'–0"	3'–4"	1'–6"	2'–0"	7'–6"	5'–6"	8'–3"
66"	179.2	1'–6"	3'–10"	7'–4"	3'–8"	1'–6"	2'–0"	8'–0"	6'–0"	8'–6"
72"	207.3	1'–6"	4'–0"	7'–10"	4'–0"	1'–6"	2'–0"	8'–6"	6'–6"	9'–3"
78"	281.5	2'–0"	4'–6"	8'–8"	4'–4"	1'–6"	2'–3"	8'–6"	7'–0"	10'–1"
84"	310.4	2'–0"	4'–9"	9'–2"	4'–9"	1'–6"	2'–6"	9'–0"	7'–6"	10'–7"

BASED ON 2:1 CHANNEL SIDE SLOPE

J	Y	X	M
8'–0"	.125'	.25'	4'–4"
9'–3"	.176'	.25'	4'–10"
9'–6"	.224'	.25'	5'–3.5"
9'–9"	.250'	.286'	5'–8"
10'–0"	.270'	.222'	6'–1"
10'–6"	.185'	.300'	6'–10"
12'–0"	.214'	.208'	7'–4.5"
13'–6"	.230'	.167'	8'–2"
15'–0"	.257'	.094'	8'–11"
16'–6"	.277'	.083'	9'–7.5"
18'–0"	.298'	.150'	10'–4.5"
19'–6"	.318'	.136'	11'–3"
21'–0"	.320'	.126'	11'–5"
22'–6"	.288'	.192'	12'–7"
24'–0"	.300'	.210'	13'–3.5"

BASED ON 2:1 CHANNEL SIDE SLOPE

THIS DETAIL WAS TAKEN FROM THE CITY OF ATLANTA'S WEBSITE. IT MAY HAVE BEEN MODIFIED AND SHOULD BE REVIEWED THOROUGHLY.

City of Atlanta
Department of Public Works

STANDARD DETAILS

STANDARD
RUBBLE HEADWALL
SHEET 2 OF 2

DATE: SEPT 2011
ORIG. DATE: JULY 1984
SCALE: N.T.S.

DETAIL NO. SW–G_HW003

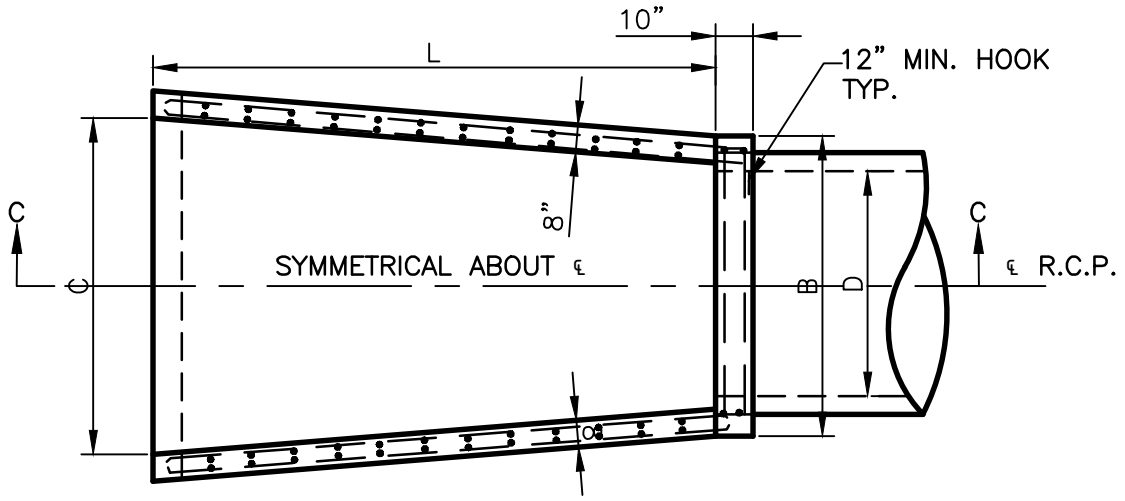

PLAN
(SHOWING WALL REINFORCMENT ONLY)

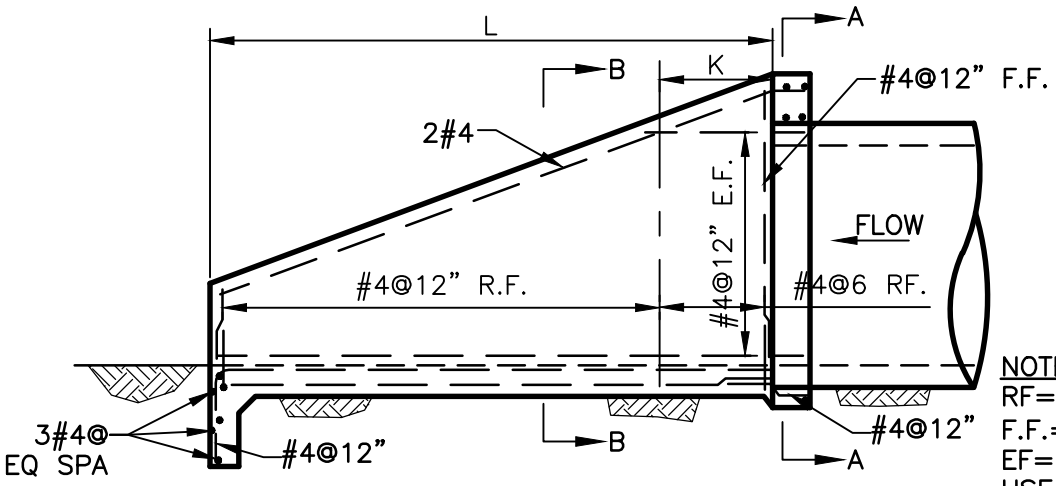

STEEL DETAIL

NOTE:
RF=REAR FACE
F.F.=FRONT FACE (EXPOSED)
EF=EACH FACE
USE ONLY WHERE OTHER HEADWALLS CAN NOT BE USED. HEADWALL TO BE PARALLEL TO ℄ OF ROADWAY.

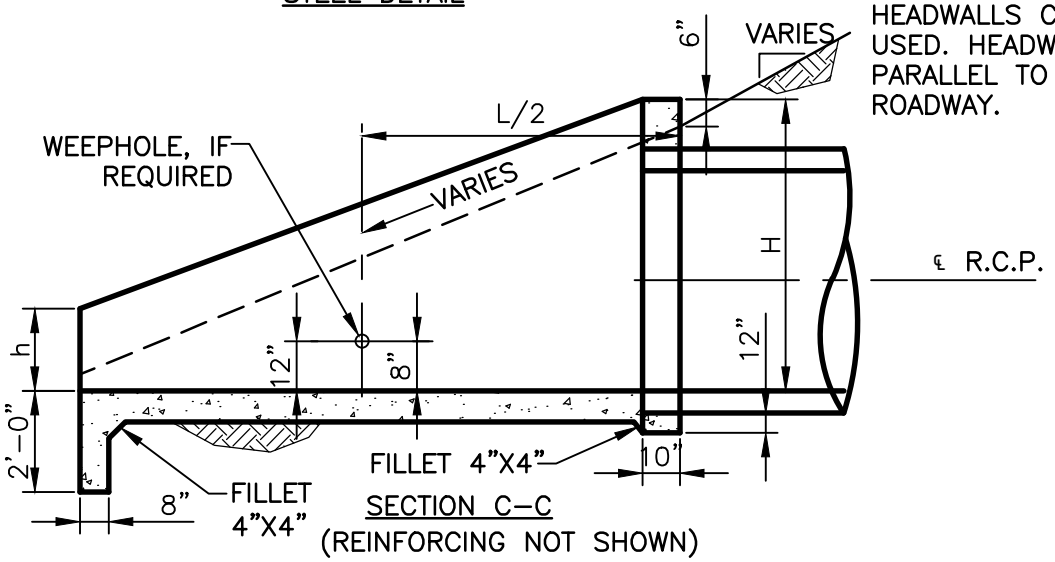

SECTION C–C
(REINFORCING NOT SHOWN)

THIS DETAIL WAS TAKEN FROM THE CITY OF ATLANTA'S WEBSITE. IT MAY HAVE BEEN MODIFIED AND SHOULD BE REVIEWED THOROUGHLY.

City of Atlanta	STANDARD DETAILS	REV. DATE: SEPT 2011 ORIG. DATE: JULY 1984 SCALE: N.T.S.
	TYPE C HEADWALL SHEET 1 OF 3	DETAIL NO. SW–G_HW004

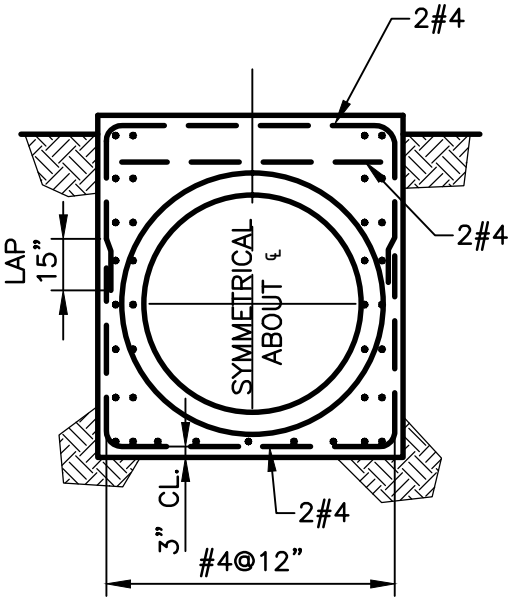

SECTION A–A

NOTE:

1. STEEL TO BE 2" CLEAR UNLESS OTHERWISE SHOWN.
2. PROVIDE ONE 3" CAST IRON WEEP HOLE IN EACH WINGWALL, AT CENTER, FOR PIPES OVER 36" DIA. PLACE WEEP HOLE AT TOP OF CLAY SUBBASE.
3. USE CLAY WHERE OTHER HEADWALLS CAN NOT BE USED.
4. HEADWALL TO BE PARALLEL TO ℄ OF ROADWAY.
5. CONCRETE TO BE CLASS "A" 3000 P.S.I. COMPREHENSIVE STRENGHT.

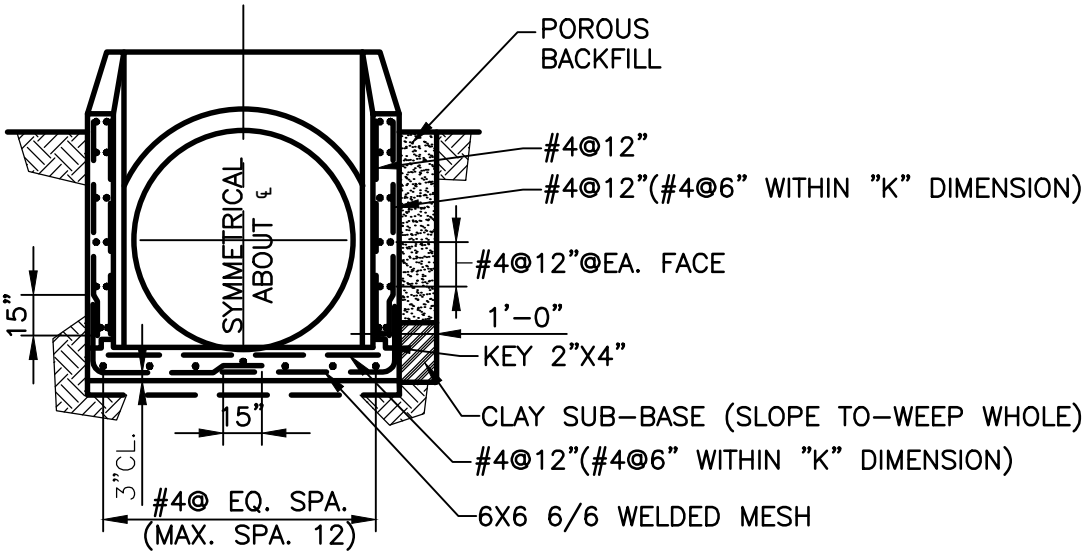

SECTION A–A

THIS DETAIL WAS TAKEN FROM THE CITY OF ATLANTA'S WEBSITE. IT MAY HAVE BEEN MODIFIED AND SHOULD BE REVIEWED THOROUGHLY.

City of Atlanta	STANDARD DETAILS	REV.
		DATE: SEPT 2011
	TYPE C HEADWALL	ORIG. DATE: JULY 1984
	SHEET 2 OF 3	SCALE: N.T.S.
		DETAIL NO. SW–G_HW004

HEADWALLS FOR CIRCULAR PIPE

DIMEN–SIONS	DIAMETER – (D)									
	18"	21"	24"	27"	30"	36"	42"	48"	54"	60"
B	2'–10"	3'–1	3'–4"	3'–7"	4'–2"	4'–8"	5'–2"	5'–8"	6'–2"	6'–10"
C	2'–7"	2'–11"	3'–4"	3'–8"	4'–5"	5'–2"	5'–11"	6'–8"	7'–5"	8'–4"
H	3'–0"	3'–3"	3'–6"	3'–9"	4'–0"	4'–6"	5'–0"	5'–6"	6'–0"	6'–6"
h	1'–0"	1'–0"	1'–0"	1'–0"	1'–3"	1'–6"	1'–9"	2'–0"	2'–3"	2'–6"
L	5'–6"	6'–0"	6'–6"	7'–0"	8'–0"	9'–0"	10'–3"	11'–6"	12'–9"	14'–0"
K	–	–	–	–	–	–	–	–	1'–0"	2'–0"

HEADWALLS FOR CIRCULAR PIPE

DIMEN–SIONS	DIAMETER – (D)	
	66"	72"
B	7'–6"	8'–0"
C	9'–1"	9'–10"
H	7'–0"	7'–6"
h	2'–9"	3'–0"
L	15'–3"	16'–6"
K	3'–0"	4'–0"

THIS DETAIL WAS TAKEN FROM THE CITY OF ATLANTA'S WEBSITE. IT MAY HAVE BEEN MODIFIED AND SHOULD BE REVIEWED THOROUGHLY.

City of Atlanta
Department of Public Works

STANDARD DETAILS

TYPE C HEADWALL
SHEET 3 OF 3

DATE: SEPT 2011
ORIG. DATE: JULY 1984
SCALE: N.T.S.

DETAIL NO. SW–G_HW004

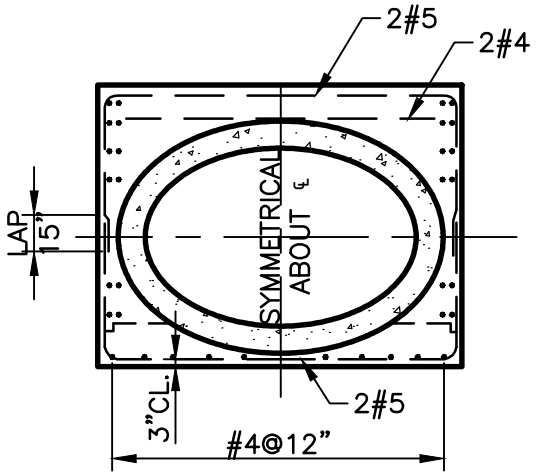

SECTION A–A

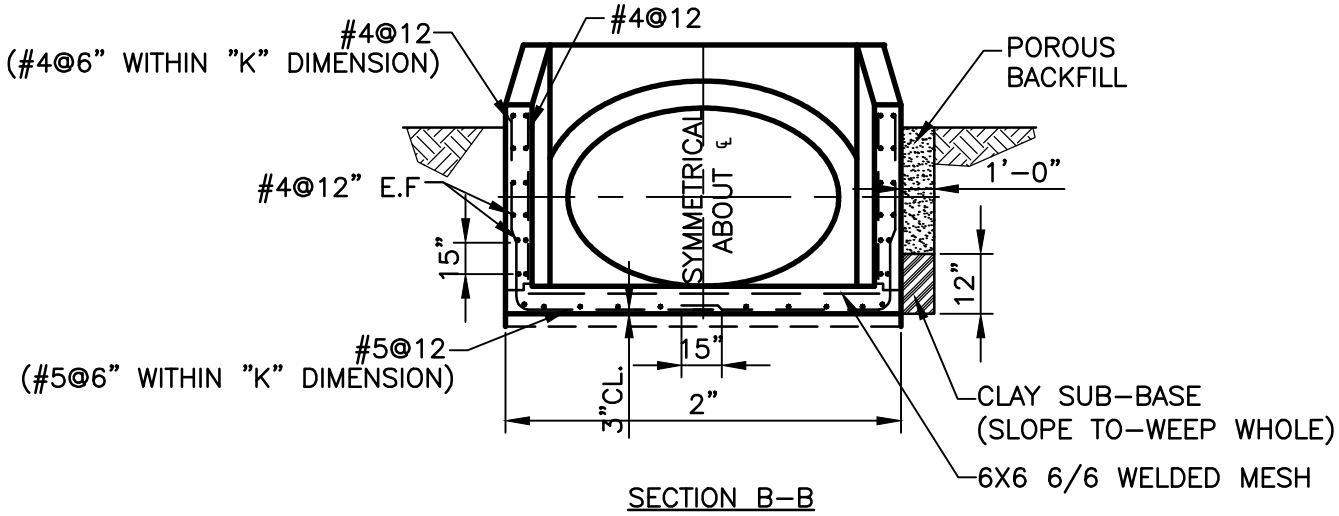

SECTION B–B

NOTE:

1. PROVIDE ONE 3" CAST IRON WEEP HOLE IN EACH WINGWALL, AT CENTER, FOR PIPES OVER 60" SPAN. PLACE WEEP HOLE AT TOP OF CLAY SUB–BASE.
2. USE ONLY WHERE OTHER HEADWALLS CAN NOT BE USED.
3. HEADWALL TO BE PARALLEL TO ℄ OF ROADWAY.

THIS DETAIL WAS TAKEN FROM THE CITY OF ATLANTA'S WEBSITE. IT MAY HAVE BEEN MODIFIED AND SHOULD BE REVIEWED THOROUGHLY.

City of Atlanta	STANDARD DETAILS	REV. DATE: SEPT 2011 ORIG. DATE: JULY 1984 SCALE: N.T.S.
	TYPE C HEADWALL SHEET 1 OF 2	DETAIL NO. SW–G_HW005

HEADWALLS FOR ELLIPTICAL PIPE

SPAN	RISE	EQUIV ROUND	B	C	H	h	L	K
23"	14"	18"	3'–5"	2'–11"	2'–5"	1'–0"	4'–3"	–
30"	19"	24"	4'–0"	3'–9"	2'–10"	1'–0"	5'–4"	–
38"	24"	30"	4'–8"	4'–8"	3'–4"	1'–0"	6'–6"	–
42"	27"	33"	5'–0"	5'–1"	3'–7"	1'–3"	7'–2"	–
45"	29"	36"	5'–3"	5'–5"	3'–10"	1'–4"	7'–8"	–
53"	34"	42"	6'–0"	6'–4"	4'–3"	1'–7"	8'–8"	–
60"	38"	48"	6'–8"	7'–1"	4'–8"	1'–9"	9'–6"	–
68"	43"	54"	7'–5"	7'–11"	5'–1"	2'–0"	10'–7"	–
76"	48"	60"	8'–2"	8'–10"	5'–7"	2'–3"	11'–7"	–
83"	53"	66"	8'–10"	9'–7"	6'–0"	2'–6"	12'–7"	–
91"	58"	72"	9'–7"	10'–6"	6'–6"	2'–8"	13'–7"	–
98"	63"	78"	10'–3"	11'–3"	6'–11"	3'–0"	14'–7"	1'–6"
106"	68"	84"	11'–0"	12'–1"	7'–5"	3'–3"	15'–7"	3'–0"
113"	72"	90"	11'–8"	12'–10"	7'–9"	3'–6"	16'–4"	4'–6"
121"	77"	96"	12'–5"	13'–8"	8'–3"	3'–7"	17'–4"	6'–0"

THIS DETAIL WAS TAKEN FROM THE CITY OF ATLANTA'S WEBSITE. IT MAY HAVE BEEN MODIFIED AND SHOULD BE REVIEWED THOROUGHLY.

City of Atlanta

STANDARD DETAILS

TYPE C HEADWALL
SHEET 2 OF 2

REV.
DATE: SEPT 2011
ORIG. DATE: JULY 1984
SCALE: N.T.S.

DETAIL NO. SW–G_HW005

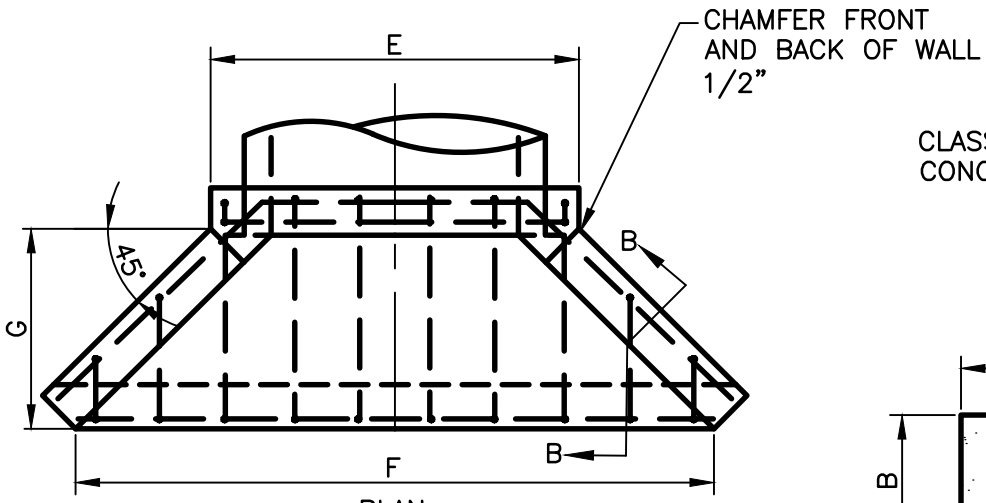

PLAN
(SHOWING REINFORCMENT)

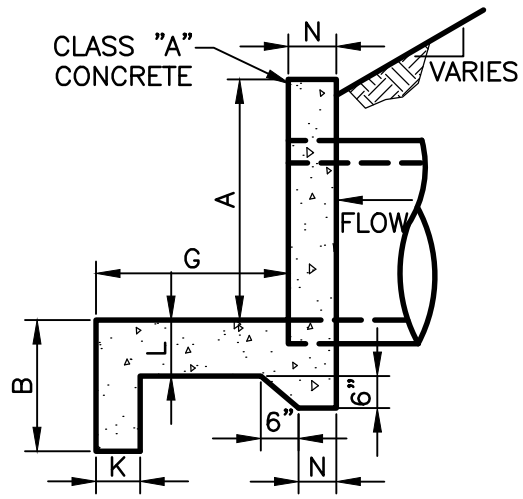

SECTION A–A
(SHOWING REINFORCING
NOT SHOWN, SIMILAR TO B–B)

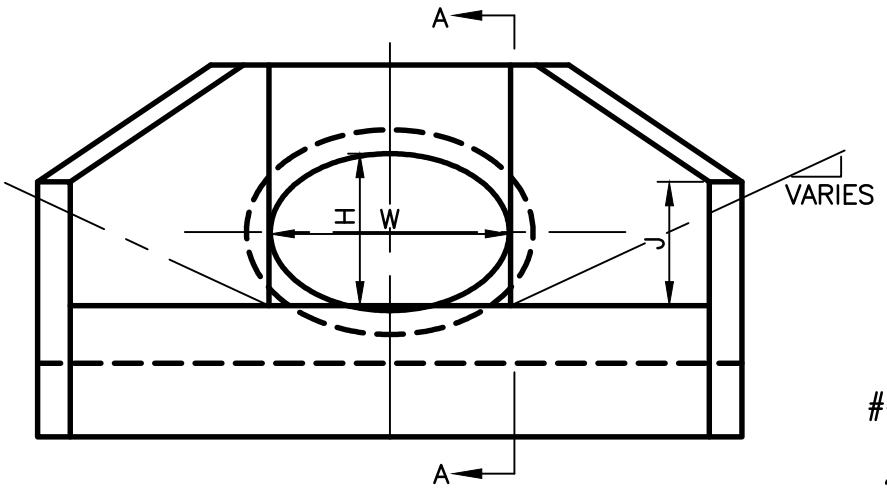

ELEVATION

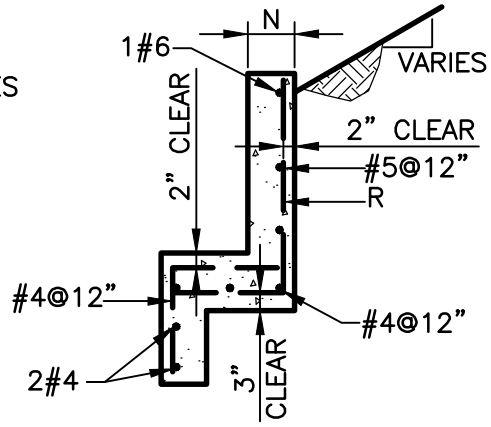

SECTION B–B

NOTE:
1. CHAMFER EXPOSED EDGES 1"X1"
2. CONCRETE QUANTITIES TO BE USED FOR ESTIMATING ONLY.
3. HEADWALL TO BE PARALLEL TO ℄ OF ROADWAY.
4. CONCRETE TO BE CLASS "A", 3000 P.S.I. COMPRESSIVE STRENGHT.

THIS DETAIL WAS TAKEN FROM THE CITY OF ATLANTA'S WEBSITE. IT MAY HAVE BEEN MODIFIED AND SHOULD BE REVIEWED THOROUGHLY.

City of Atlanta	STANDARD DETAILS	REV. DATE: SEPT 2011 ORIG. DATE: JULY 1984 SCALE: N.T.S.
	TYPE E HEADWALL SHEET 1 OF 2	DETAIL NO. SW–G_HW006

EQ.RD.	W	H	A	B	E	F	G	J	K	L
36"	45"	29"	3'–9"	2'–0"	5'–6"	9'–9"	3'–0"	2'–0"	8"	10"
42"	53"	34"	4'–3	2'–0"	6'–3"	11'–5"	3'–6"	2'–3"	8"	10"
48"	60"	38"	4'–8"	2'–0"	7'–0"	12'–4"	3'–8"	2'–6"	8"	10"
54"	68"	43"	5'–1"	2'–0"	7'–8"	13'–8"	4'–0"	2'–9"	9"	12"
60"	76"	48"	5'–6"	2'–0"	8'–5"	15'–4"	4'–6"	3'–0"	9"	12"
66"	83"	53"	6'–0"	2'–0"	9'–1"	17'–0"	5'–0"	3'–3"	9"	12"
72"	91"	58"	6'–6"	2'–0"	9'–10"	18'–3"	5'–4"	3'–6"	9"	12"

*BASED ON 2:1 SIDE SLOPES

N	R	CONC. CY.
8"	#5@12"	2.17
10"	#5@12"	2.99
10"	#5@12"	3.38
10"	#5@12"	4.53
10"	#5@12"	5.32
12"	#6@8"	7.07
12"	#6@8"	7.88

THIS DETAIL WAS TAKEN FROM THE CITY OF ATLANTA'S WEBSITE. IT MAY HAVE BEEN MODIFIED AND SHOULD BE REVIEWED THOROUGHLY.

City of Atlanta

STANDARD DETAILS

TYPE C HEADWALL
SHEET 2 OF 2

REV.
DATE: SEPT 2011
ORIG. DATE: JULY 1984
SCALE: N.T.S.

DETAIL NO. SW–G_HW006

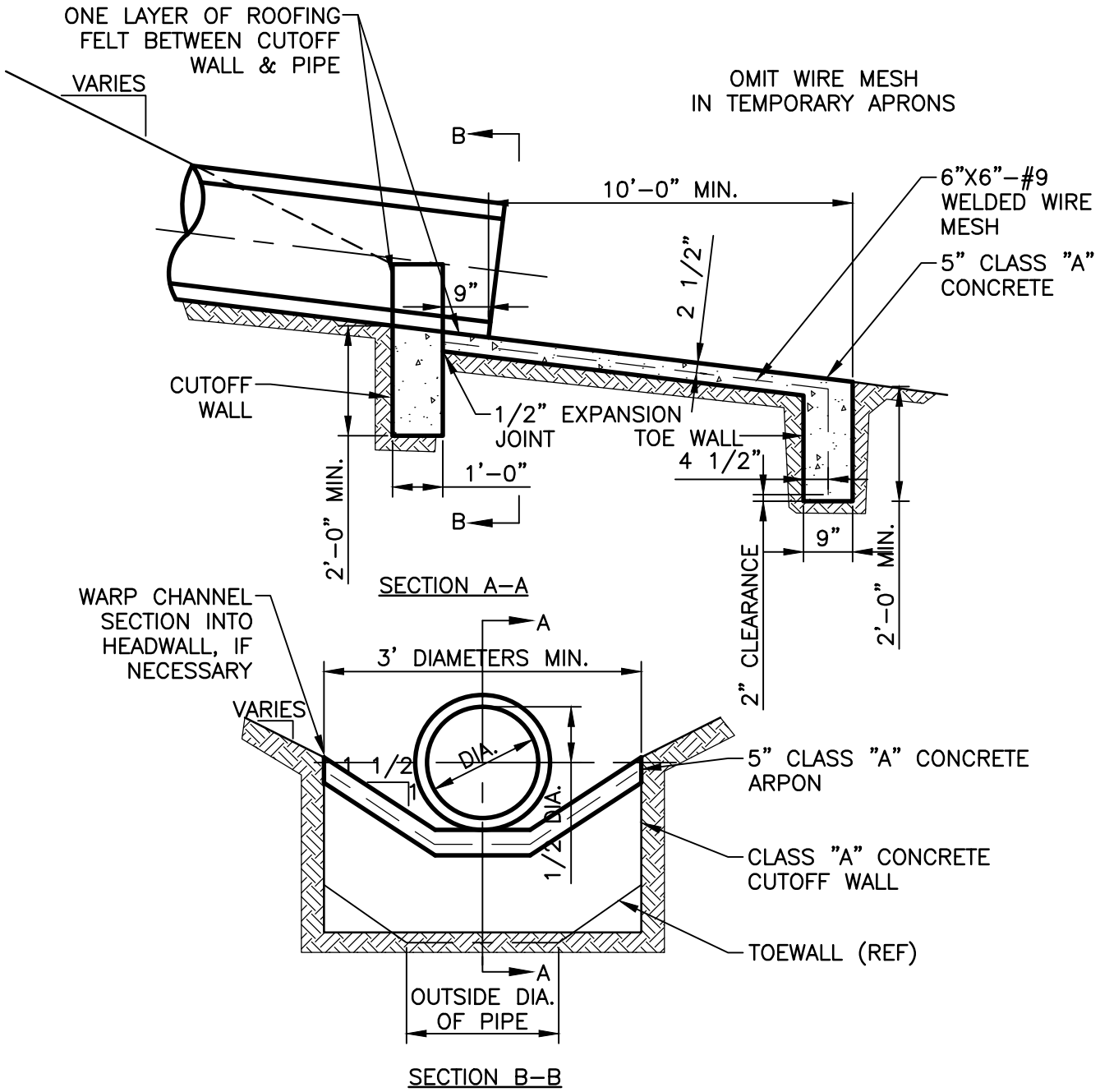

CUTOFF WALL TO BE PARALLEL TO ℄ OF ROADWAY UNLESS OTHERWISE NOTED ON CONTRACT DRAWINGS

THIS DETAIL WAS TAKEN FROM THE CITY OF ATLANTA'S WEBSITE. IT MAY HAVE BEEN MODIFIED AND SHOULD BE REVIEWED THOROUGHLY.

City of Atlanta	STANDARD DETAILS	REV. DATE: SEPT 2011 ORIG. DATE: JULY 1984 SCALE: N.T.S.
	TYPE F HEADWALL	DETAIL NO. SW-G_HW007

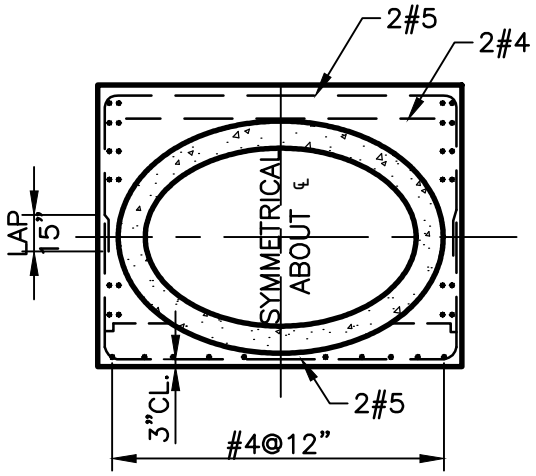

SECTION A–A

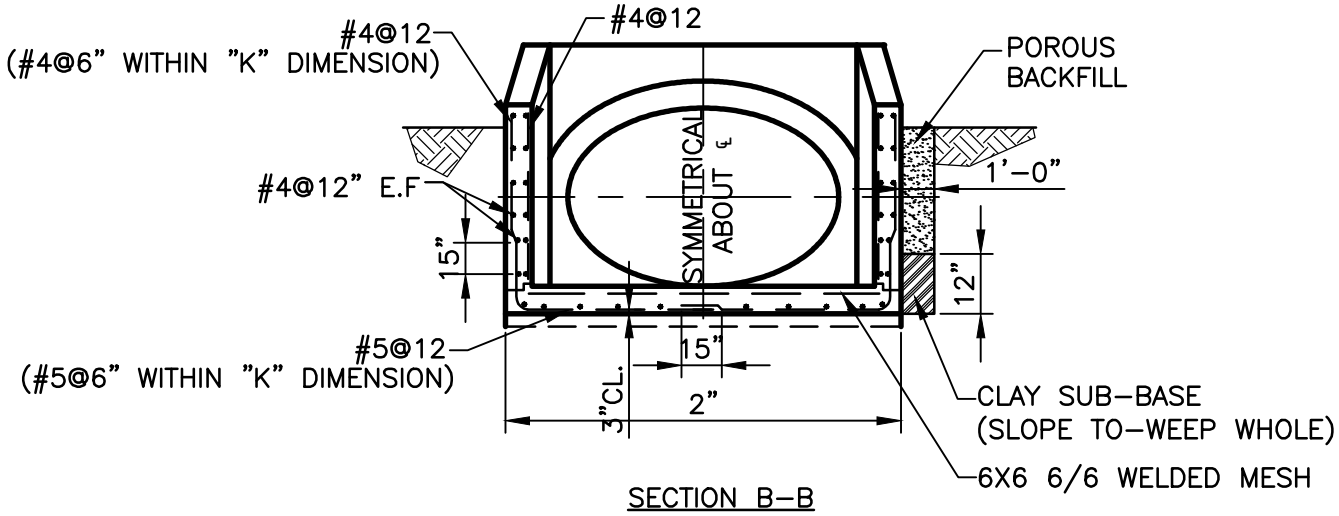

SECTION B–B

NOTE:

1. PROVIDE ONE 3" CAST IRON WEEP HOLE IN EACH WINGWALL, AT CENTER, FOR PIPES OVER 60" SPAN. PLACE WEEP HOLE AT TOP OF CLAY SUB–BASE.
2. USE ONLY WHERE OTHER HEADWALLS CAN NOT BE USED.
3. HEADWALL TO BE PARALLEL TO ℄ OF ROADWAY.

THIS DETAIL WAS TAKEN FROM THE CITY OF ATLANTA'S WEBSITE. IT MAY HAVE BEEN MODIFIED AND SHOULD BE REVIEWED THOROUGHLY.

City of Atlanta	STANDARD DETAILS	REV. DATE: SEPT 2011 ORIG. DATE: JULY 1984 SCALE: N.T.S.
	TYPE G HEADWALL SHEET 1 OF 2	DETAIL NO. SW–G_HW008

HEADWALLS FOR ELLIPTICAL PIPE

SPAN	RISE	EQUIV ROUND	B	C	H	h	L	K
23"	14"	18"	3'–5"	2'–11"	2'–5"	1'–0"	4'–3"	–
30"	19"	24"	4'–0"	3'–9"	2'–10"	1'–0"	5'–4"	–
38"	24"	30"	4'–8"	4'–8"	3'–4"	1'–0"	6'–6"	–
42"	27"	33"	5'–0"	5'–1"	3'–7"	1'–3"	7'–2"	–
45"	29"	36"	5'–3"	5'–5"	3'–10"	1'–4"	7'–8"	–
53"	34"	42"	6'–0"	6'–4"	4'–3"	1'–7"	8'–8"	–
60"	38"	48"	6'–8"	7'–1"	4'–8"	1'–9"	9'–6"	–
68"	43"	54"	7'–5"	7'–11"	5'–1"	2'–0"	10'–7"	–
76"	48"	60"	8'–2"	8'–10"	5'–7"	2'–3"	11'–7"	–
83"	53"	66"	8'–10"	9'–7"	6'–0"	2'–6"	12'–7"	–
91"	58"	72"	9'–7"	10'–6"	6'–6"	2'–8"	13'–7"	–
98"	63"	78"	10'–3"	11'–3"	6'–11"	3'–0"	14'–7"	1'–6"
106"	68"	84"	11'–0"	12'–1"	7'–5"	3'–3"	15'–7"	3'–0"
113"	72"	90"	11'–8"	12'–10"	7'–9"	3'–6"	16'–4"	4'–6"
121"	77"	96"	12'–5"	13'–8"	8'–3"	3'–7"	17'–4"	6'–0"

THIS DETAIL WAS TAKEN FROM THE CITY OF ATLANTA'S WEBSITE. IT MAY HAVE BEEN MODIFIED AND SHOULD BE REVIEWED THOROUGHLY.

City of Atlanta

STANDARD DETAILS

TYPE G HEADWALL
SHEET 2 OF 2

REV.
DATE: SEPT 2011
ORIG. DATE: JULY 1984
SCALE: N.T.S.

DETAIL NO. SW–G_HW008

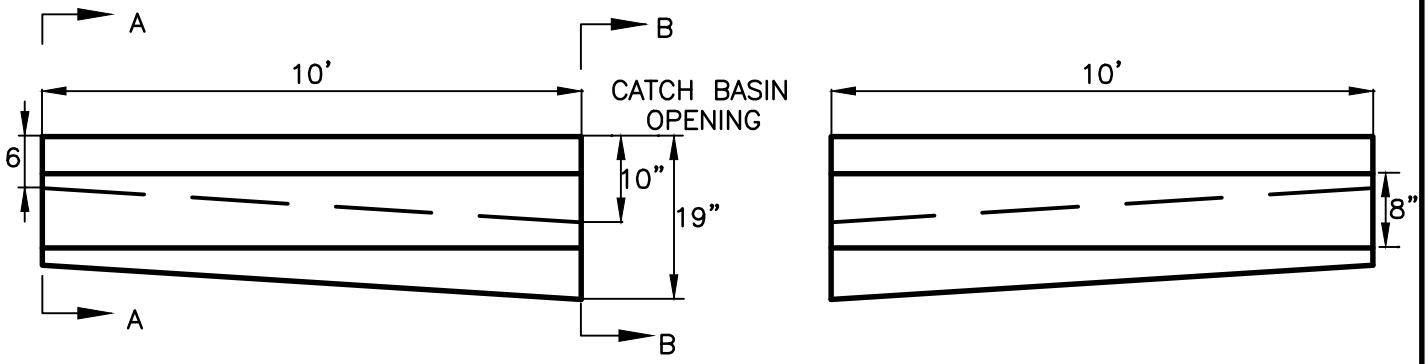

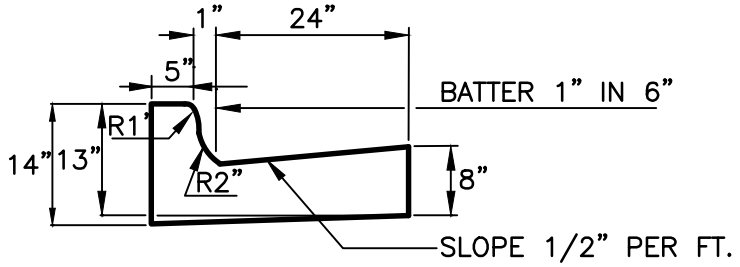

STANDARD SECTION AND SECTION A–A

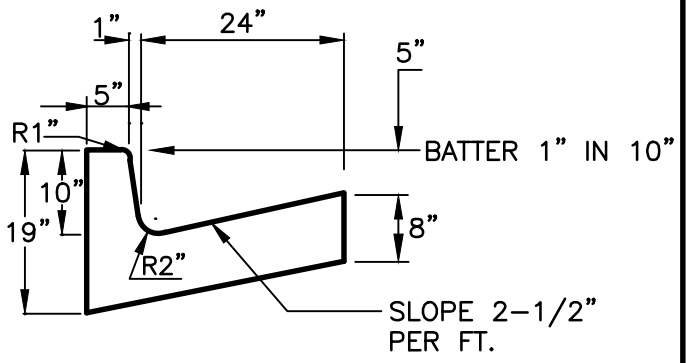

SECTION B–B
(SECTION AT CATCH BASIN)

NOTES:

1. SECTIONS, WHERE DIRECTED BY THE ENGINEER, MAY BE CONSTRUCTED IN UNIFORM LENTHS OF TWENTY (20) FT.S ON TANGENT, LENGTH MAY BE REDUCED FOR CLOSURE AND AT CORNERS TO NOT LESS THAN SIX(6) FEET.
2. BASIS OF PAYMENT: PER LINEAR FOOT (INCLUDING VARIABLE HEIGHT CURB)
3. CONCRETE CURB AND GUTTER IN ACCORDANCE WITH GEORGIA STATE HIGHWAY SPECIFICATIONS SECTION 441 (2001 EDITION)
4. SEE STD. CURB CATCHBASIN–NO.CB–1 & CB–2

THIS DETAIL WAS TAKEN FROM THE CITY OF ATLANTA'S WEBSITE. IT MAY HAVE BEEN MODIFIED AND SHOULD BE REVIEWED THOROUGHLY.

City of Atlanta	STANDARD DETAILS	REV.
		DATE: SEPT 2011
	CONCRETE CURB AND GUTTER	ORIG. DATE: JAN 1997
		SCALE: N.T.S.
		DETAIL NO. TR–B_CG001

NOTE:
GRADE A GRANTIE CURB
SPLIT FACE, AND SAWED
TOP

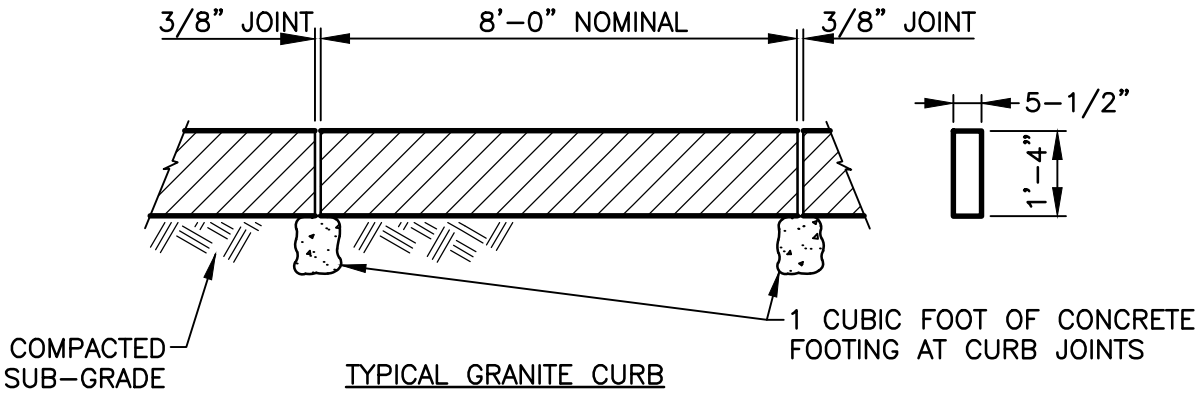

TYPICAL GRANITE CURB

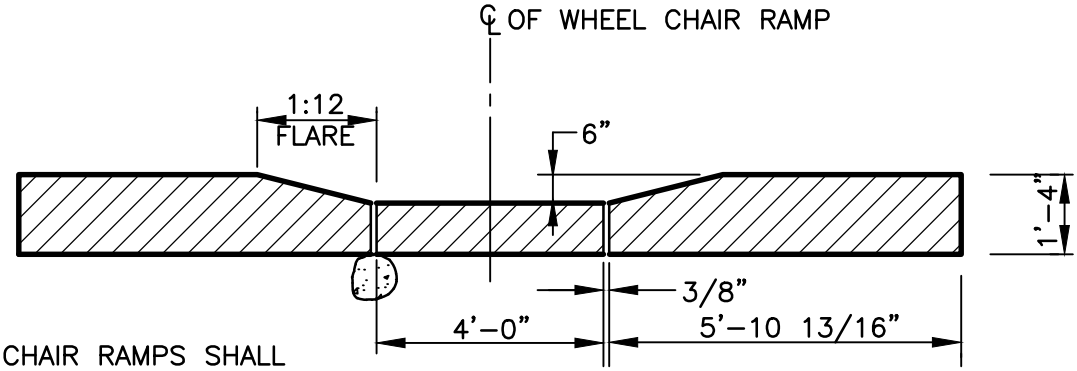

NOTE:
WHEEL CHAIR RAMPS SHALL
BE FULLY ADA COMPLIANT

DIMENSION AT FACE OF CURB

GRANITE CURB DETAIL AT WHEEL CHAIR RAMP

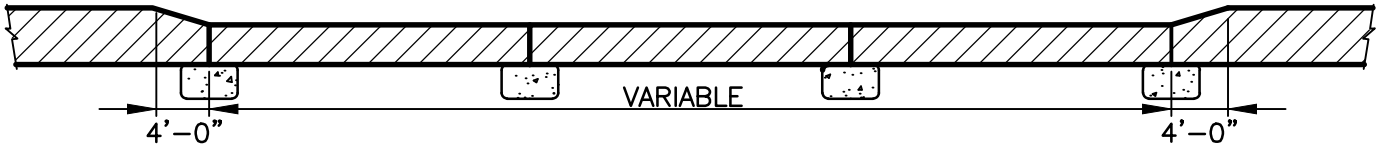

GRANITE CURB DETAIL AT DRIVEWAY

THIS DETAIL WAS TAKEN FROM THE CITY OF ATLANTA'S WEBSITE. IT MAY HAVE BEEN MODIFIED AND SHOULD BE REVIEWED THOROUGHLY.

City of Atlanta	STANDARD DETAILS	REV. DATE: SEPT 2011 ORIG. DATE: NOV 2004 SCALE: N.T.S.
	GRANITE CURB AT DRIVEWAY	DETAIL NO. TR-B_CG002

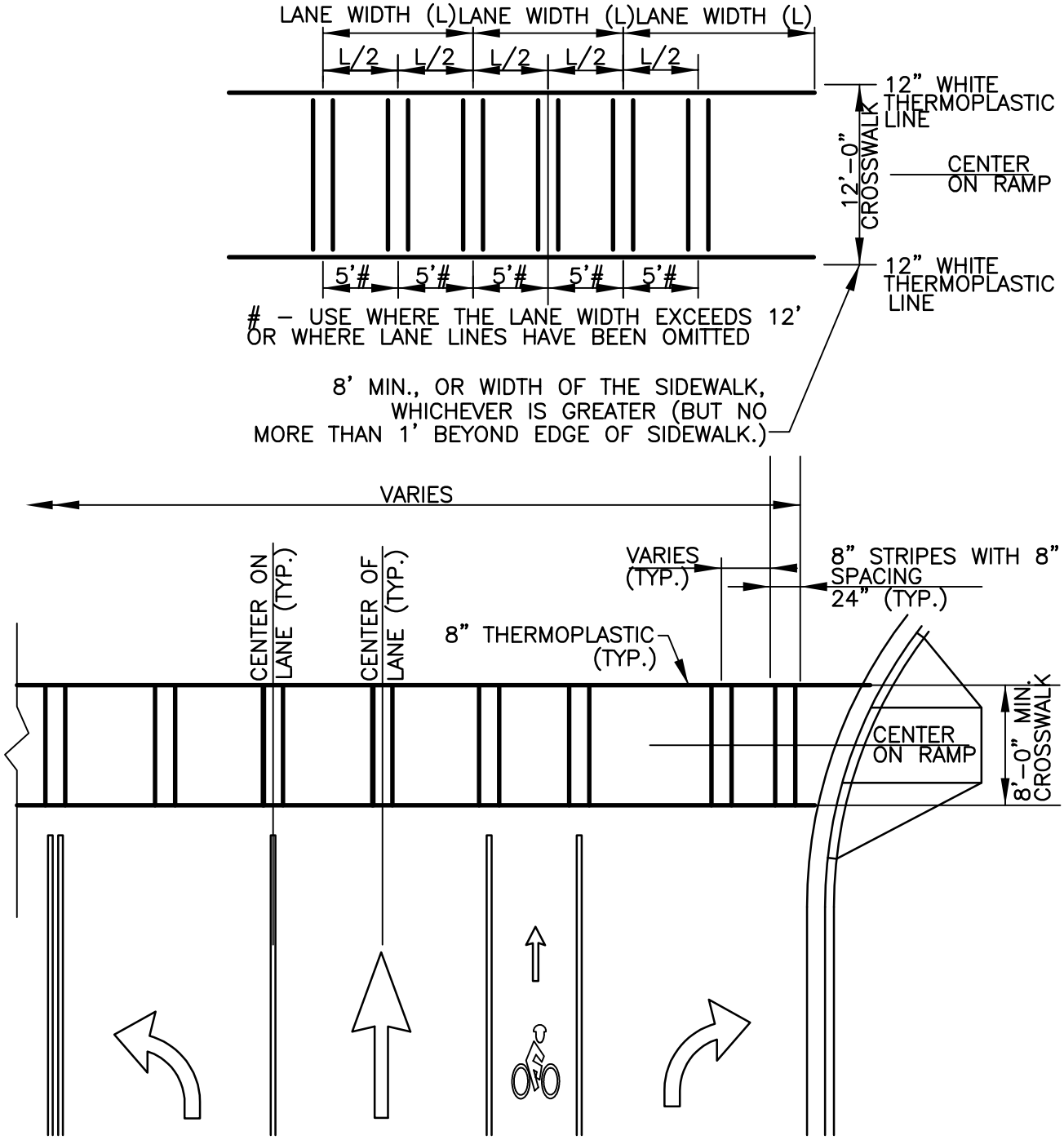

GENERAL NOTE:

LOCATE CROSSWALKS CENTERED ON WHEELCHAIR RAMP LOCATIONS OR 5' BACK OF, EDGE OF PAVEMENT OR CURB FACE.

PAIRS OF STRIPES SHALL BE PLACED IN THE CENTER OF TRAVEL LANES AND CENTERED ON LANE STRIPES THE NUMBER OF PAIRS IS DETERMINED BY THE FORMULA L*2–1, WHERE L= THE NUMBER OF TRAVEL.

THE CITY OF ATLANTA HAS ADOPTED THE GDOT GUIDELINES FOR CROSSWALK DIMENSIONS. SEE GEORGIA PEDESTRIAN & STREETSCAPE GUIDE (2003).

THIS DETAIL WAS TAKEN FROM THE CITY OF ATLANTA'S WEBSITE. IT MAY HAVE BEEN MODIFIED AND SHOULD BE REVIEWED THOROUGHLY.

City of Atlanta	STANDARD DETAILS	REV.
		DATE: SEPT 2011
		ORIG. DATE: NOV 2004
	PIANO–KEY STYLE STRIPED CROSSWALK	SCALE: N.T.S.
		DETAIL NO. TR–B_CW001

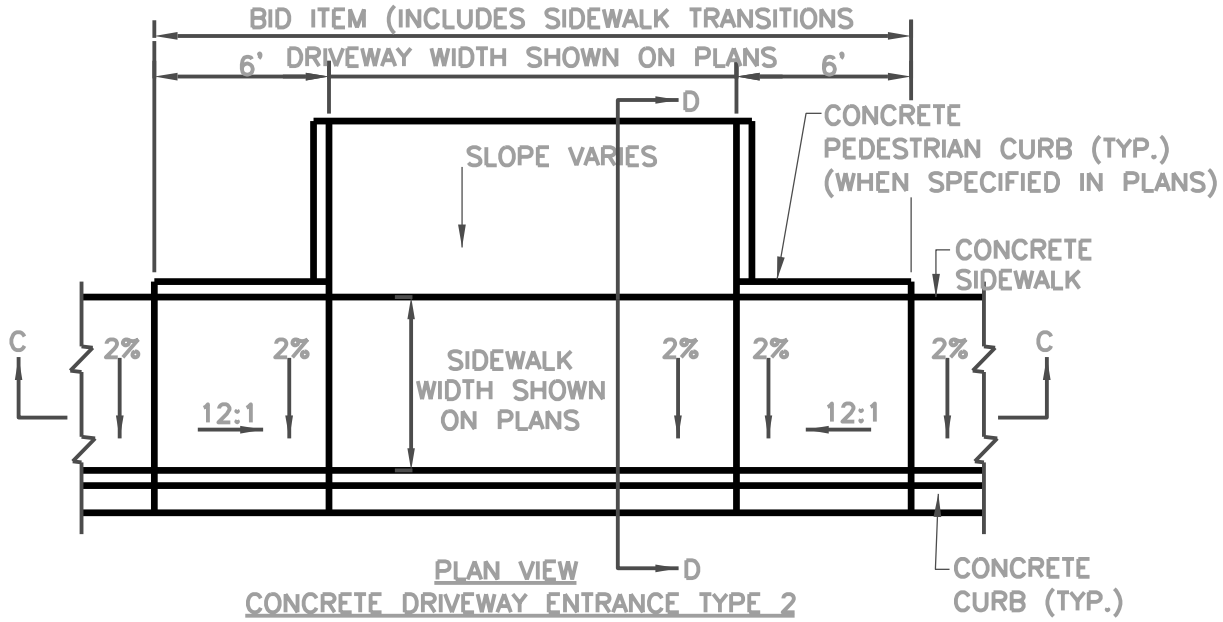

PLAN VIEW
CONCRETE DRIVEWAY ENTRANCE TYPE 2

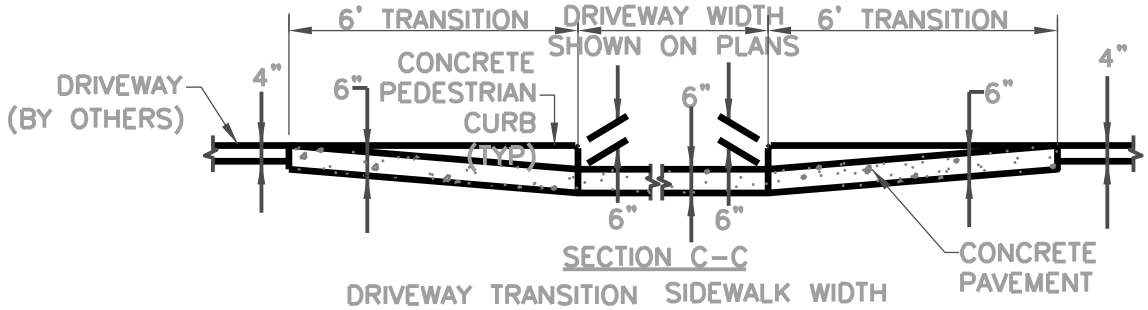

SECTION C–C

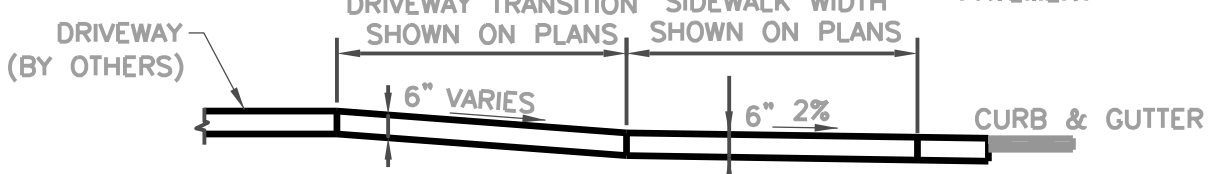

SECTION D–D

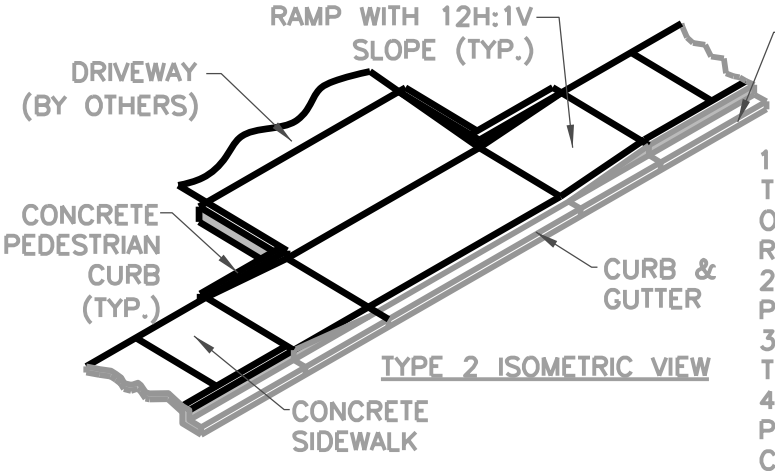

TYPE 2 ISOMETRIC VIEW

GENERAL NOTES

1. AVOID PLACING DRAINAGE STRUCTURES, TRAFFIC SIGNAL EQUIPMENT, JUNCTION BOXES, OR OTHER OBSTRUCTIONS IN FROMNT OF RAMP ACCESS AREAS.
2. FOR THE CURB AND GUTTER SHOWN, SEE PLANS FOR CURB TYPE.
3. RAMP SLOPES SHALL NOT BE STEEPER THAN 12:1
4. CONSTRUCTION OF THE CONCRETE PEDESTRIAN CURB TO BE INCLUDED IN THE COST OF THE SIDEWALK.

THIS DETAIL WAS TAKEN FROM THE CITY OF ATLANTA'S WEBSITE. IT MAY HAVE BEEN MODIFIED AND SHOULD BE REVIEWED THOROUGHLY.

City of Atlanta	STANDARD DETAILS	REV.
		DATE: OCT. 2011
	ALTERNATE DRIVEWAY APRON	ORIG. DATE: NOV 2004
		SCALE: N.T.S.
		DETAIL NO. TR–B_DR003

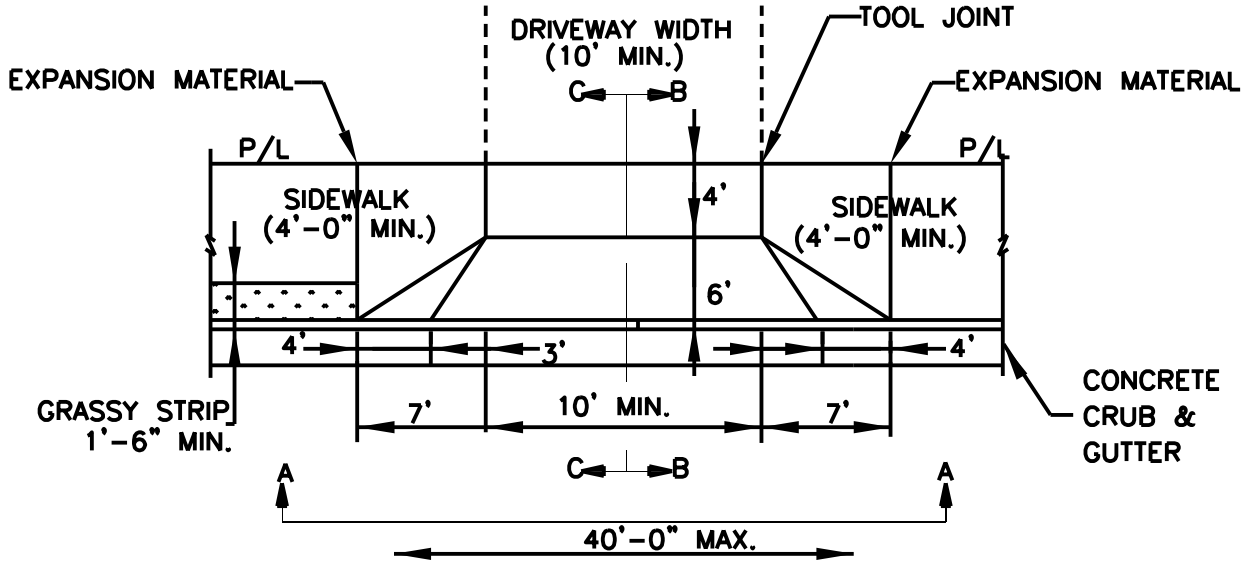

TOP VIEW
N.T.S.

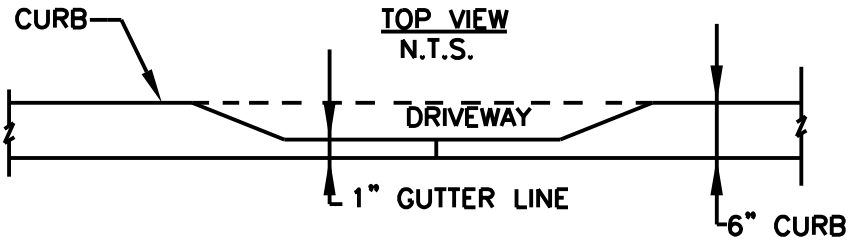

SECTION A-A
N.T.S.

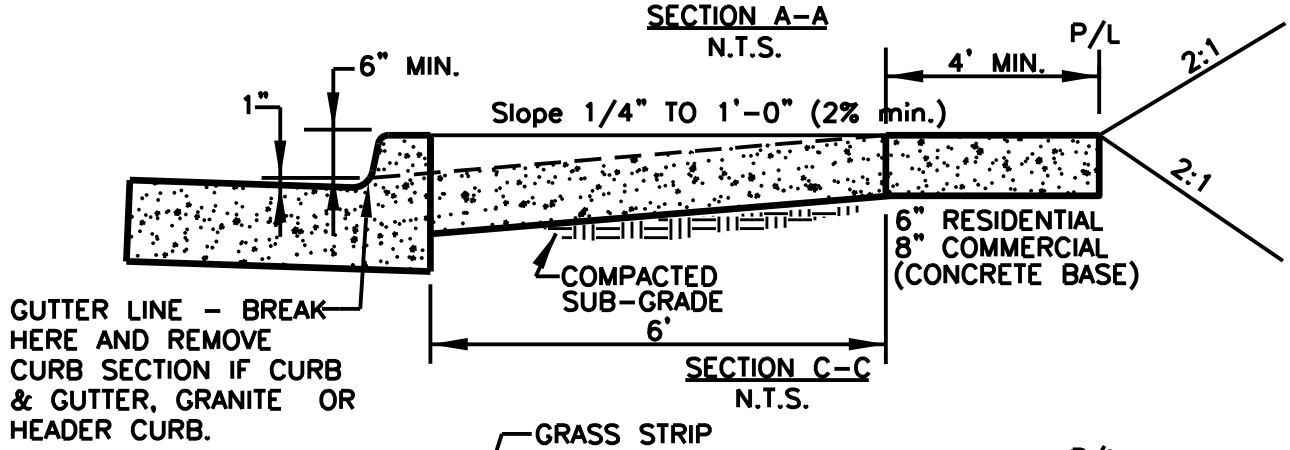

SECTION C-C
N.T.S.

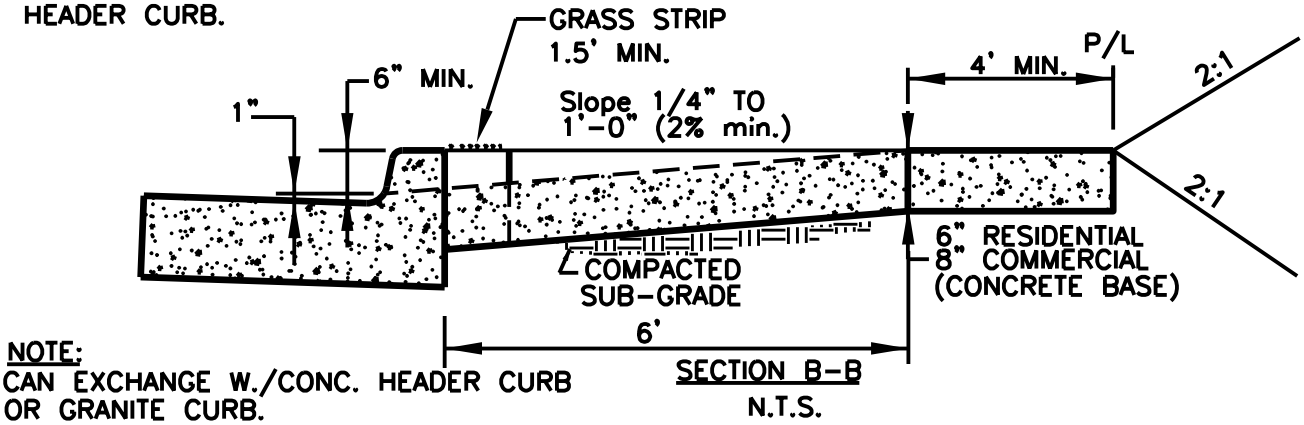

NOTE:
CAN EXCHANGE W./CONC. HEADER CURB
OR GRANITE CURB.

SECTION B-B
N.T.S.

THIS DETAIL WAS TAKEN FROM THE CITY OF ATLANTA'S WEBSITE. IT MAY HAVE BEEN MODIFIED AND SHOULD BE REVIEWED THOROUGHLY.

City of Atlanta	STANDARD DETAILS	REV. DATE: SEPT 2011 ORIG. DATE: NOV 2004 SCALE: N.T.S.
	STANDARD DRIVEWAY DETAIL	DETAIL NO. TR-B_DR005

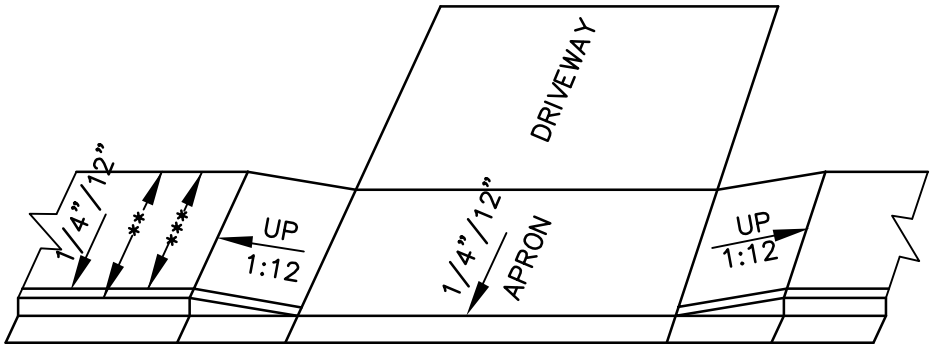

*** – VARIES (6' MAX.)
** – VARIES MAY INCLUDE GRASS STRIP

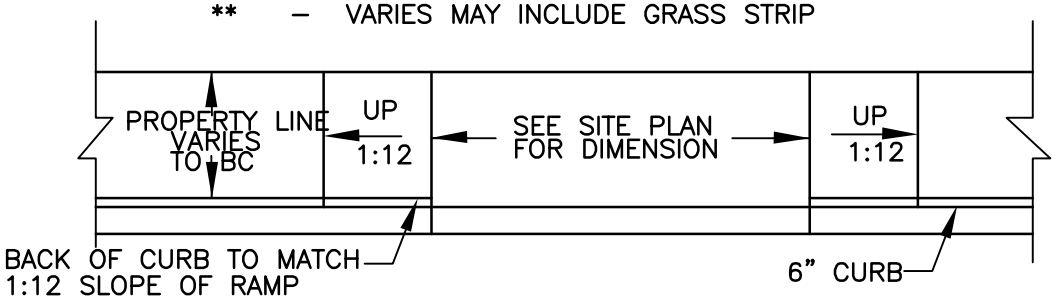

GENERAL NOTES:

1. AVOID PLACING DRAINAGE STRUCTURES TRAFFIC SIGNAL EQUIPMENT, JUNCTION BOXES, OR OTHER OBSTRUCTIONS IN FRONT OF RAMP ACCESS AREAS.
2. FOR THE CURB AND GUTTER SHOWN, SEE PLANS FOR CURB TYPE.
3. RAMP SLOPES SHALL NOT BE STEEPER THAN 12:1.
4. CONSTRUCTION OF THE CONCRETE PEDESTRIAN CURB TO BE INCLUDED IN THE COST OF THE SIDEWALK.

THIS DETAIL WAS TAKEN FROM THE CITY OF ATLANTA'S WEBSITE. IT MAY HAVE BEEN MODIFIED AND SHOULD BE REVIEWED THOROUGHLY.

City of Atlanta	STANDARD DETAILS	REV. DATE: SEPT 2011 ORIG. DATE: NOV 2004 SCALE: N.T.S.
	ALTERATE DRIVEWAY APRON	DETAIL NO. TR–B_DR006

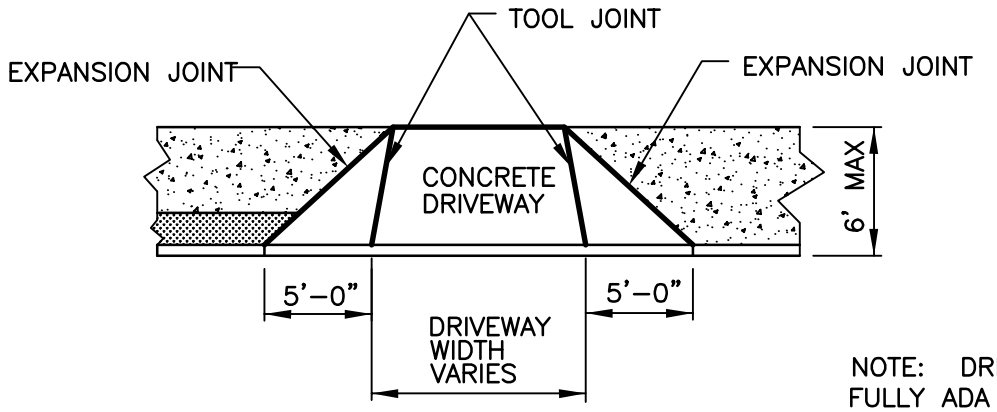

NOTE: DRIVEWAY SHALL BE FULLY ADA COMPLIANT

TOP VIEW
N.T.S.

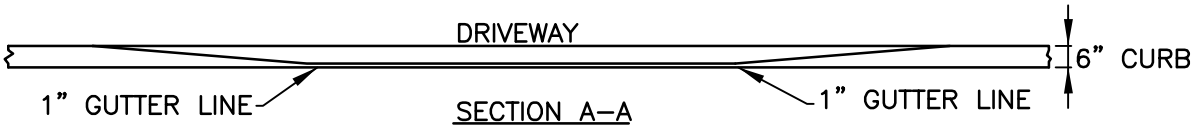

SECTION A–A
N.T.S.

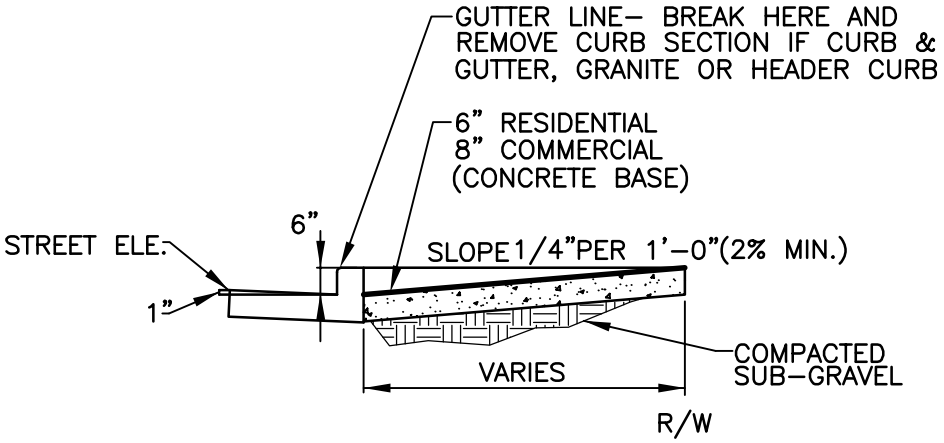

SECTION B–B
N.T.S.

THIS DETAIL WAS TAKEN FROM THE CITY OF ATLANTA'S WEBSITE. IT MAY HAVE BEEN MODIFIED AND SHOULD BE REVIEWED THOROUGHLY.

City of Atlanta	STANDARD DETAILS	REV. DATE: SEPT 2011 ORIG. DATE: NOV 2004 SCALE: N.T.S.
	NARROW DRIVEWAY APRON	DETAIL NO. TR–B_DR007

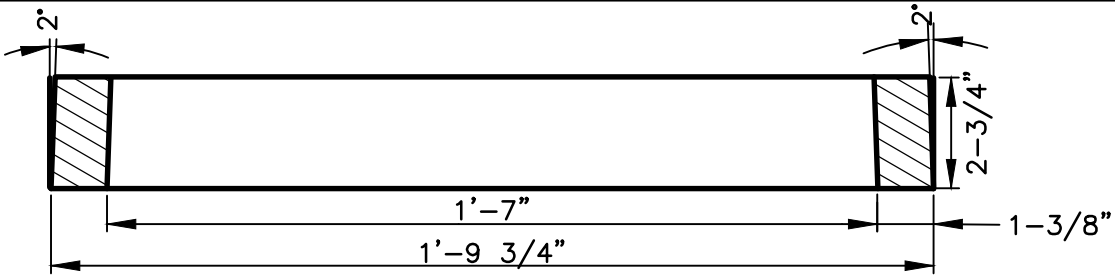

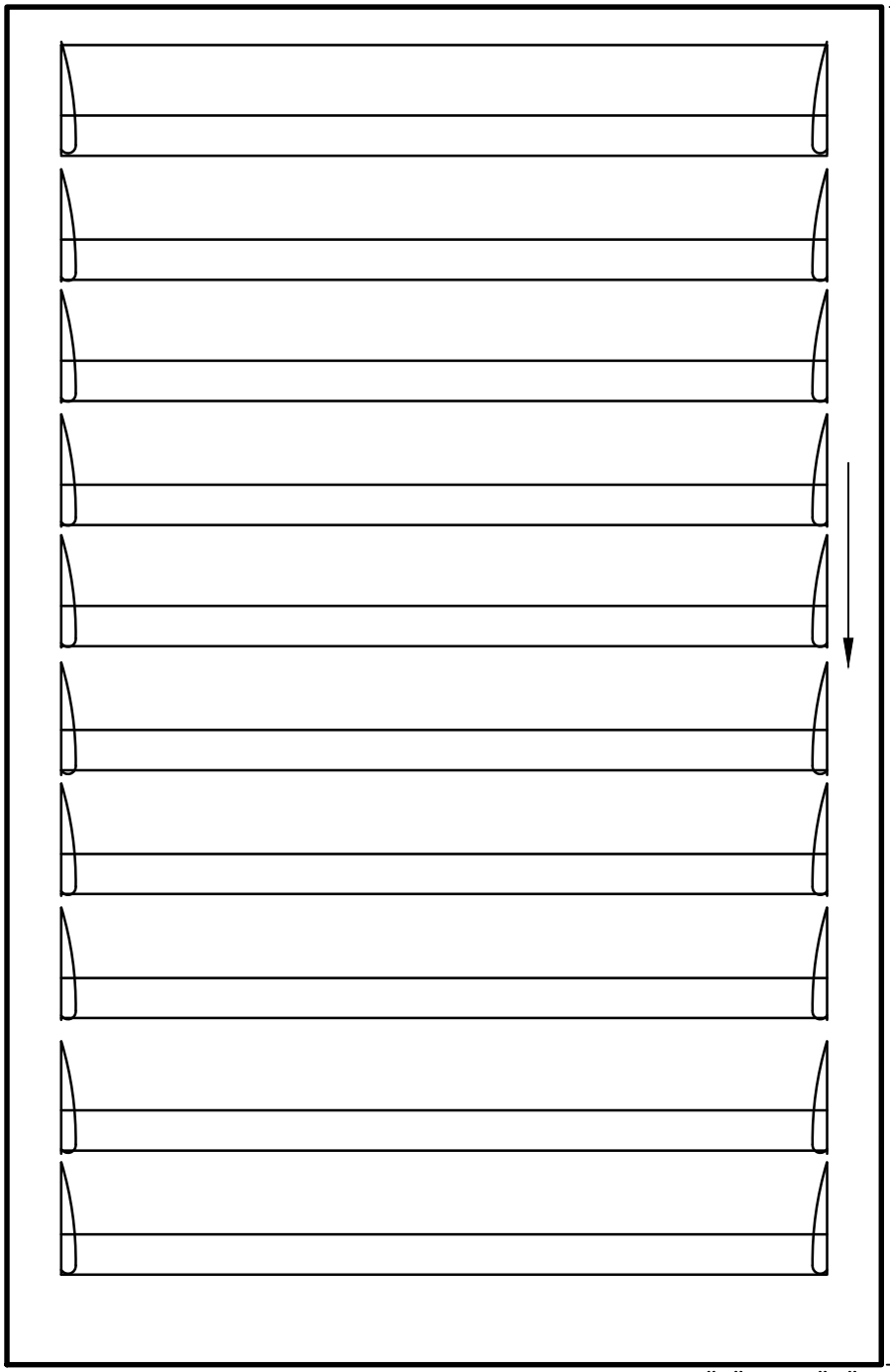

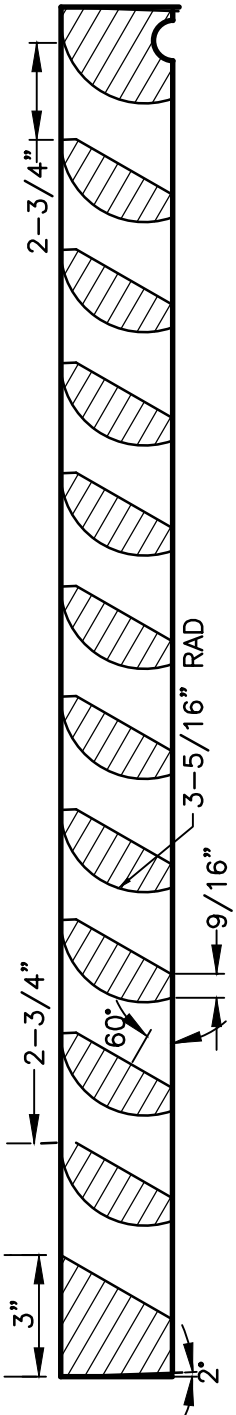

NOTE: USE WITH CITY OF ATLANTA STANDARD TYPE "A" OR "B" FRAME

THIS DETAIL WAS TAKEN FROM THE CITY OF ATLANTA'S WEBSITE. IT MAY HAVE BEEN MODIFIED AND SHOULD BE REVIEWED THOROUGHLY.

City of Atlanta	STANDARD DETAILS	REV. DATE: SEPT 2011 ORIG. DATE: JAN 1997 SCALE: N.T.S.
	BIKE SAFETY GRATE (ASTM A-48-74 CLASS 30)	DETAIL NO. TR-B_GR001

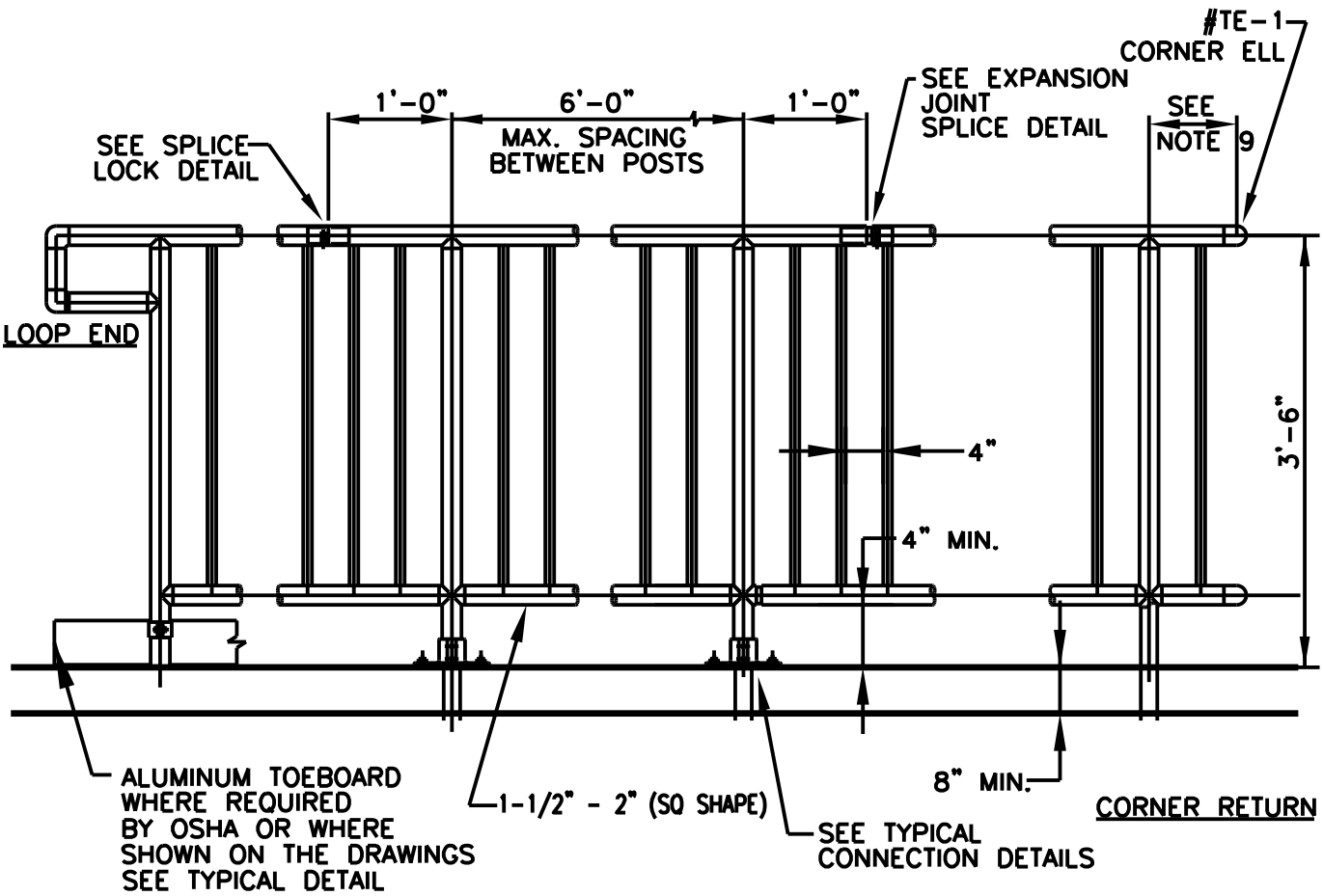

TYPICAL TYPE I HANDRAIL

(HANDDRAILS SHALL BE TOP MOUNTED AS SHOWN ON PLANS)

COMPACTED UB-GRADE

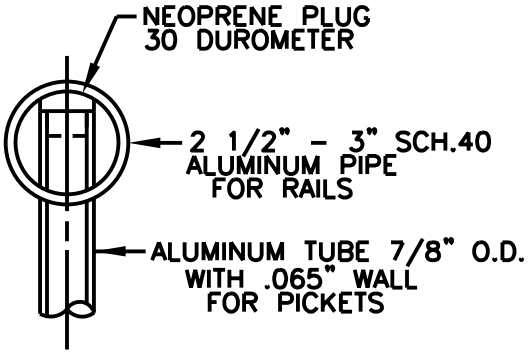

PICKET TO RAIL CONNECTION

THIS DETAIL WAS TAKEN FROM THE CITY OF ATLANTA'S WEBSITE. IT MAY HAVE BEEN MODIFIED AND SHOULD BE REVIEWED THOROUGHLY.

City of Atlanta	STANDARD DETAILS	REV.
		DATE: OCT. 2011
	TYPICAL TYPE 1 HANDRAIL	ORIG. DATE: NOV. 2004
		SCALE: N.T.S.
		DETAIL NO. TR-B_HL001

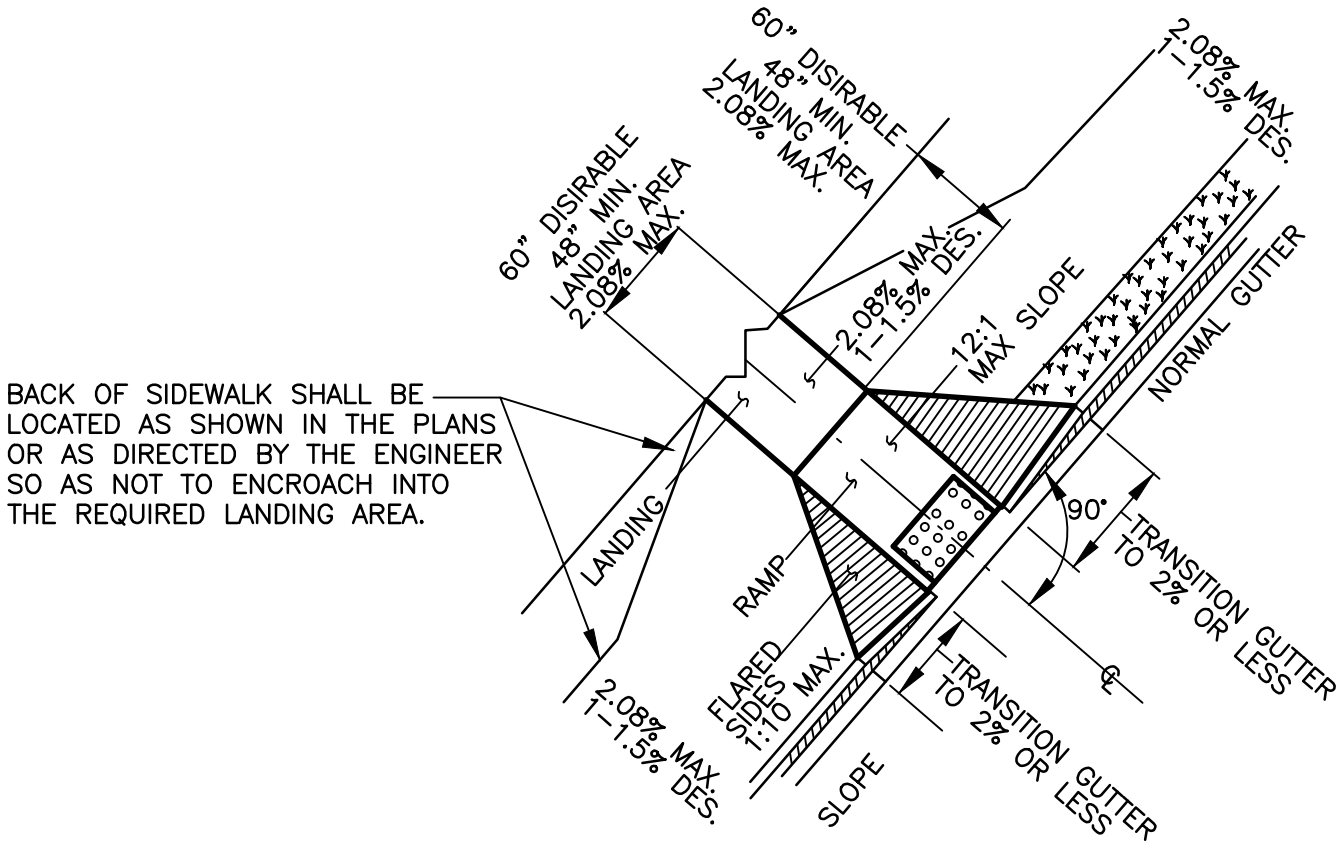

THIS DETAIL WAS TAKEN FROM THE CITY OF ATLANTA'S WEBSITE. IT MAY HAVE BEEN MODIFIED AND SHOULD BE REVIEWED THOROUGHLY.

City of Atlanta	STANDARD DETAILS	REV. DATE: SEPT 2011 ORIG. DATE: JAN 1997 SCALE: N.T.S.
	TYPE A PEDESTRIAN RAMP	DETAIL NO. TR-B_HR001

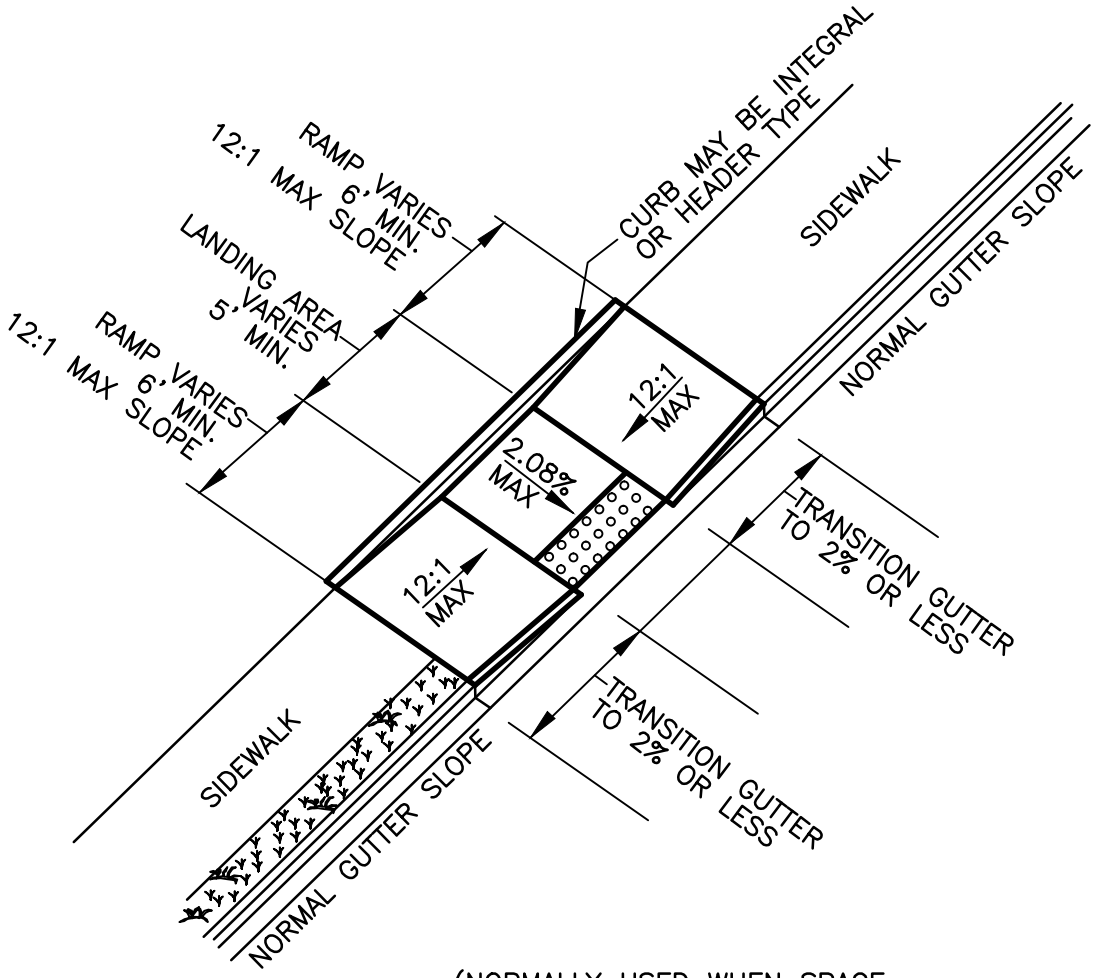

(NORMALLY USED WHEN SPACE
IS NOT AVAILABLE FOR A LANDING
AT THE TOP OF A TYPE A RAMP)

THIS DETAIL WAS TAKEN FROM THE CITY OF ATLANTA'S WEBSITE. IT MAY HAVE BEEN MODIFIED AND SHOULD BE REVIEWED THOROUGHLY.

City of Atlanta	STANDARD DETAILS	REV. DATE: SEPT 2011 ORIG. DATE: JAN 1997 SCALE: N.T.S.
	TYPE B PEDESTRIAN RAMP	DETAIL NO. TR–B_HR002

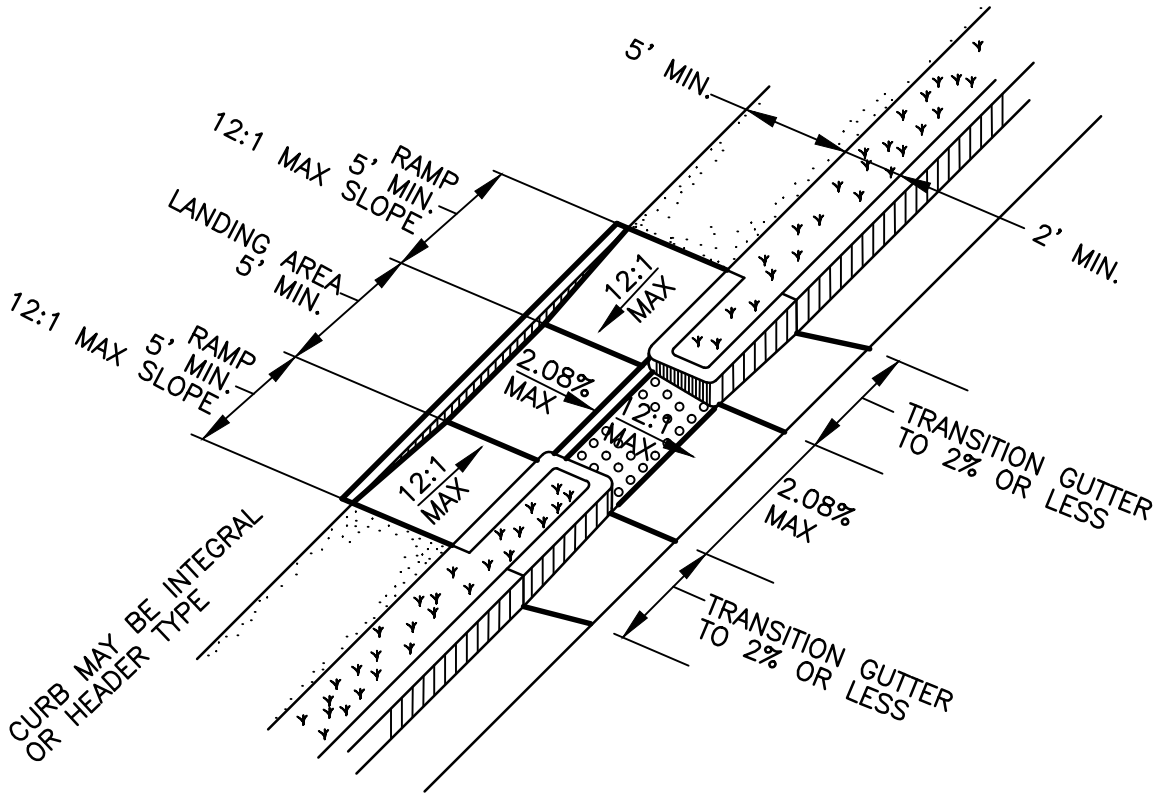

THIS DETAIL WAS TAKEN FROM THE CITY OF ATLANTA'S WEBSITE. IT MAY HAVE BEEN MODIFIED AND SHOULD BE REVIEWED THOROUGHLY.

City of Atlanta	STANDARD DETAILS	REV. DATE: SEPT 2011 ORIG. DATE: JAN 1997 SCALE: N.T.S.
	TYPE C PEDESTRIAN RAMP	DETAIL NO. TR–B_HR003

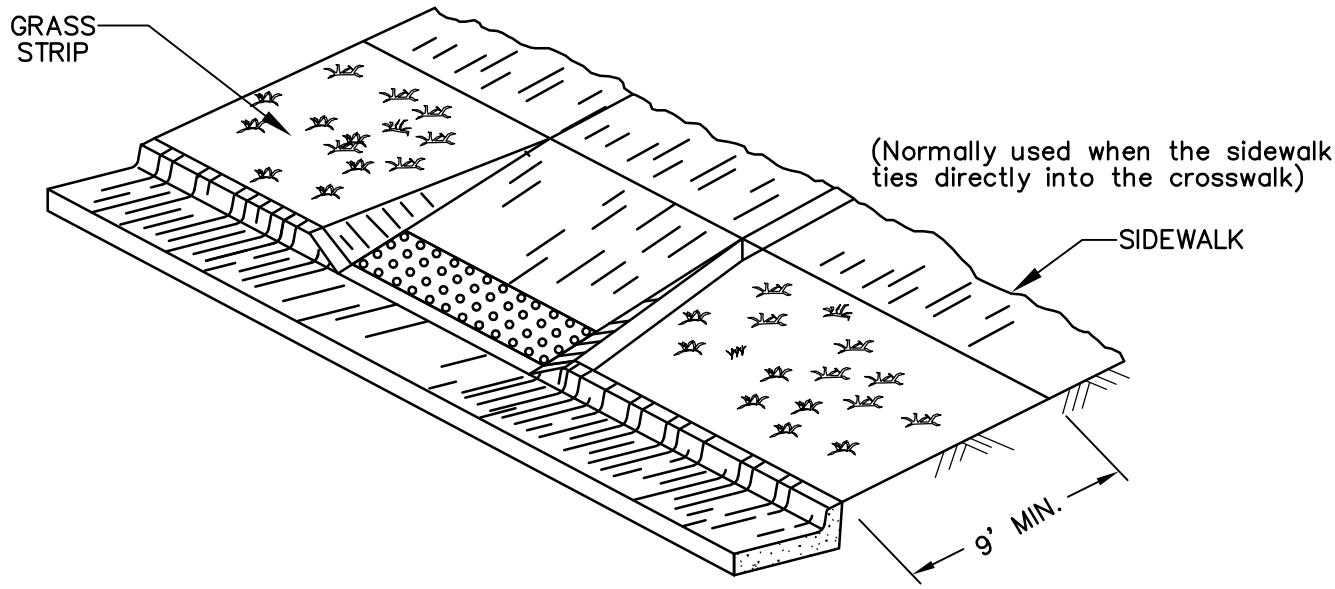

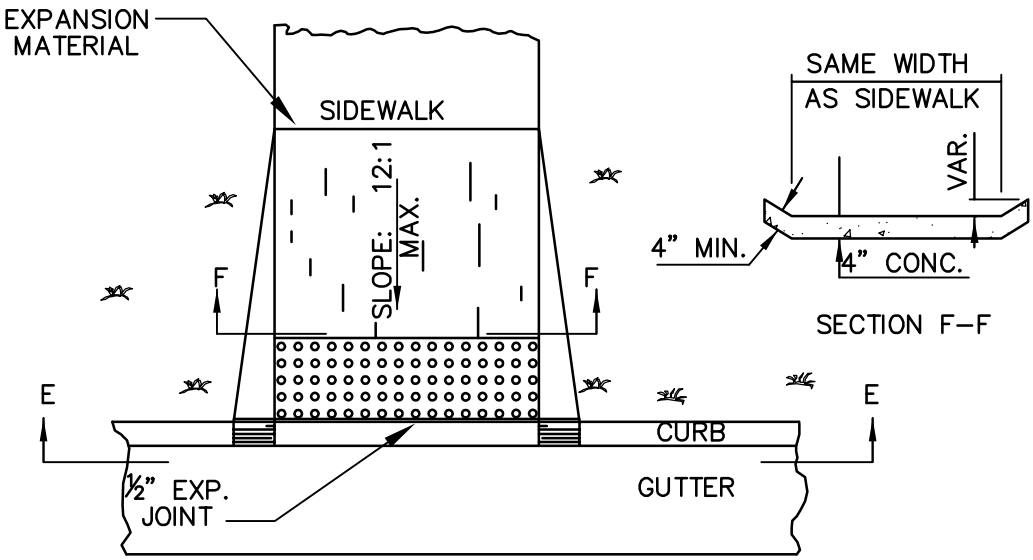

IN AREAS WHERE THE GUTTER HAS A SLOPE 1" IN 1' END NORMAL GUTTER SLOPE AT A DISTANCE OF 6 TO 10 FEET FROM THE RAMP AND BEGIN TRANSITION TO A FLAT GUTTER SLOPE. NORMAL GUTTER SLOPE SHALL BE RESUMED AT A SIMILAR DISTANCE BEYOND THE RAMP.

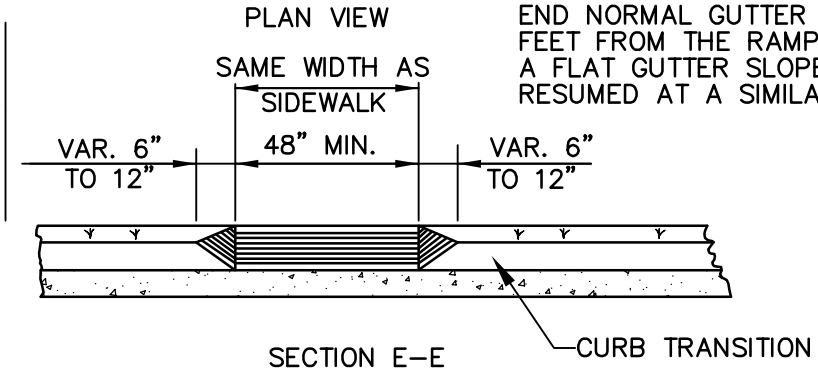

THIS DETAIL WAS TAKEN FROM THE CITY OF ATLANTA'S WEBSITE. IT MAY HAVE BEEN MODIFIED AND SHOULD BE REVIEWED THOROUGHLY.

City of Atlanta	STANDARD DETAILS	REV.
		DATE: SEPT 2011
		ORIG. DATE: NOV 2004
	TYPE D PEDESTRIAN RAMP	SCALE: N.T.S.
		DETAIL NO. TR–B_HR004

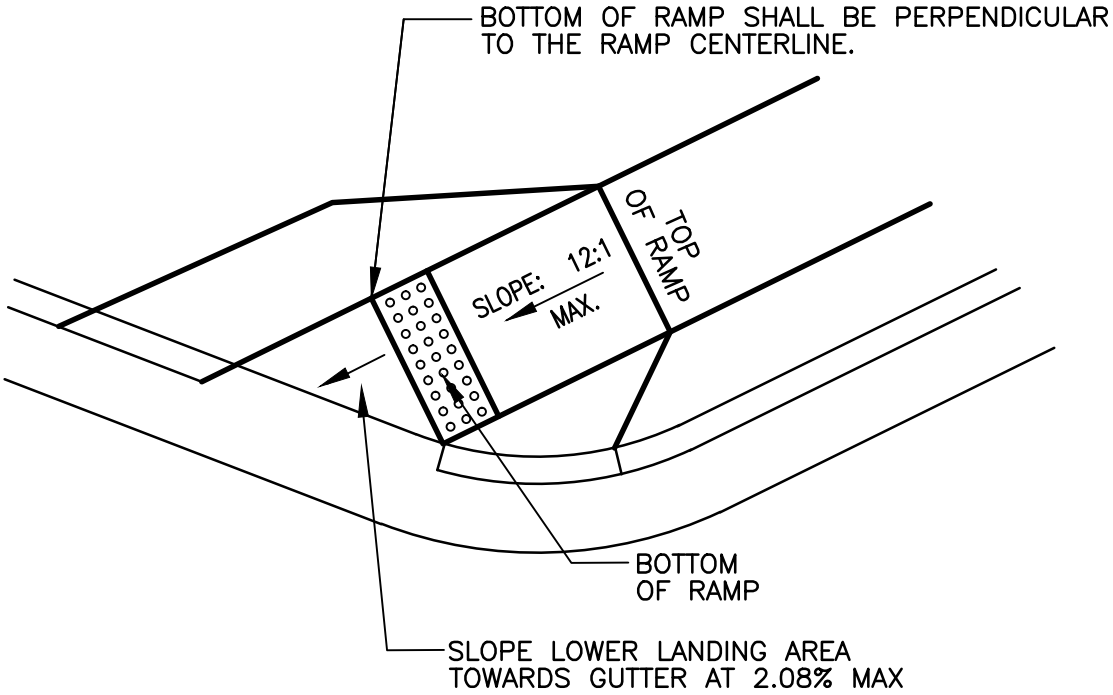

NOTE
WHEN THE RAMP CENTERLINE IS NOT PERPENDICULAR TO THE CURB A LEVEL LANDING AREA WITH SLOPES LESS THAN 2.08% MUST BE PROVIDED AT THE BOTTOM OF THE RAMP.

THIS DETAIL WAS TAKEN FROM THE CITY OF ATLANTA'S WEBSITE. IT MAY HAVE BEEN MODIFIED AND SHOULD BE REVIEWED THOROUGHLY.

City of Atlanta	STANDARD DETAILS	REV. DATE: SEPT 2011 ORIG. DATE: JAN 1997 SCALE: N.T.S.
	SKEWED RAMP DETAIL TYPE A AND D ONLY	DETAIL NO. TR–B_HR005

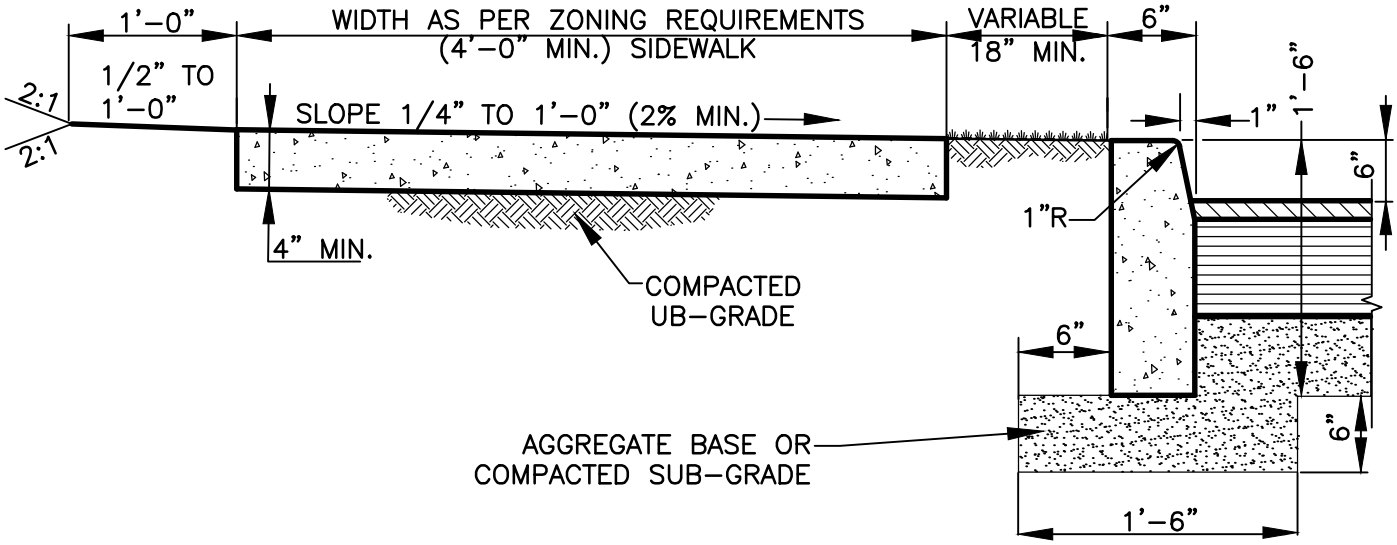

NOTES:

1. SIDEWALK SHALL BE SCRIBED WITH TRANSVERSE CONTROL JOINTS IN SQUARES EQUAL TO SIDEWALK WIDTH BUT NOT TO EXCEED 10 FEET.
2. CONCRETE SHALL BE TYPE "A" 3,000 P.S.I. MIN. STRENGTH.
3. EXPANSION JOINTS SHALL EXTEND ACROSS THE FULL WIDTH OF THE SIDWALK. CONTROL JOINTS SHALL BE LOCATED ON EACH SIDE OF A DRIVEWAY AND NOT MORE THAN 100 FEET APART.
4. PREFORMED BITUMINOUS MATERIAL SHALL BE PLACED BETWEEN ALL FIXED OBJECTS AND THE NEW CONCRETE SIDEWALK.
5. ALL CONCRETE WORK SHALL BE PER CITY OF ATLANTA STANDARD SPECIFICATIONS FOR CONSTRUCTION.

THIS DETAIL WAS TAKEN FROM THE CITY OF ATLANTA'S WEBSITE. IT MAY HAVE BEEN MODIFIED AND SHOULD BE REVIEWED THOROUGHLY.

City of Atlanta	STANDARD DETAILS	REV.
		DATE: SEPT 2011
	CONCRETE SIDEWALK AND CONCRETE HEADER CURB	ORIG. DATE: JAN 1997
		SCALE: N.T.S.
		DETAIL NO. TR–B_SW003

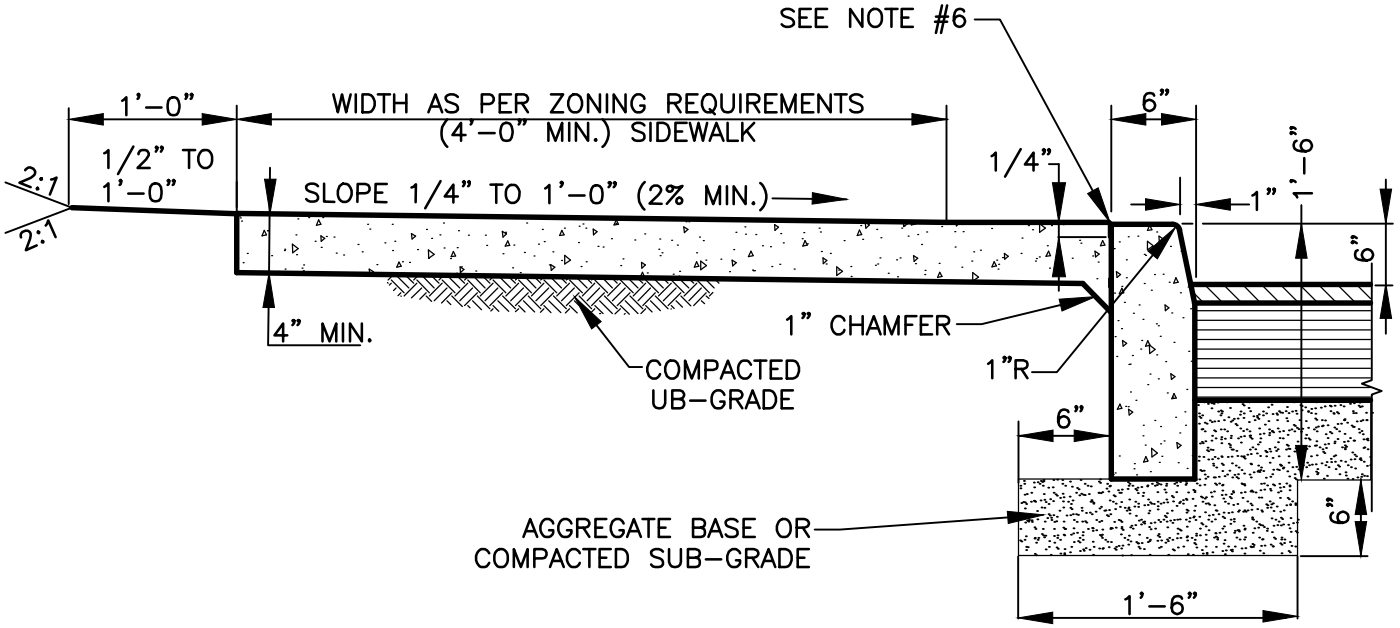

NOTES:

1. SIDEWALK SHALL BE SCRIBED WITH TRANSVERSE CONTROL JOINTS IN SQUARES EQUAL TO SIDEWALK WIDTH BUT NOT TO EXCEED 10 FEET.
2. CONCRETE SHALL BE TYPE "A" 3,000 P.S.I. MIN. STRENGTH.
3. EXPANSION JOINTS SHALL EXTEND ACROSS THE FULL WIDTH OF THE SIDWALK. CONTROL JOINTS SHALL BE LOCATED ON EACH SIDE OF A DRIVEWAY AND NOT MORE THAN 100 FEET APART.
4. PREFORMED BITUMINOUS MATERIAL SHALL BE PLACED BETWEEN ALL FIXED OBJECTS AND THE NEW CONCRETE SIDEWALK.
5. ALL CONCRETE WORK SHALL BE PER CITY OF ATLANTA STANDARD SPECIFICATIONS FOR CONSTRUCTION.
6. 1/4 INCH TOOLED JOINT BETWEEN CURB AND SIDEWALK.

THIS DETAIL WAS TAKEN FROM THE CITY OF ATLANTA'S WEBSITE. IT MAY HAVE BEEN MODIFIED AND SHOULD BE REVIEWED THOROUGHLY.

City of Atlanta	STANDARD DETAILS	REV. DATE: SEPT 2011 ORIG. DATE: JAN 1997 SCALE: N.T.S.
	STANDARD MONOLITHIC SIDEWALK AND CURB	DETAIL NO. TR-B_SW004

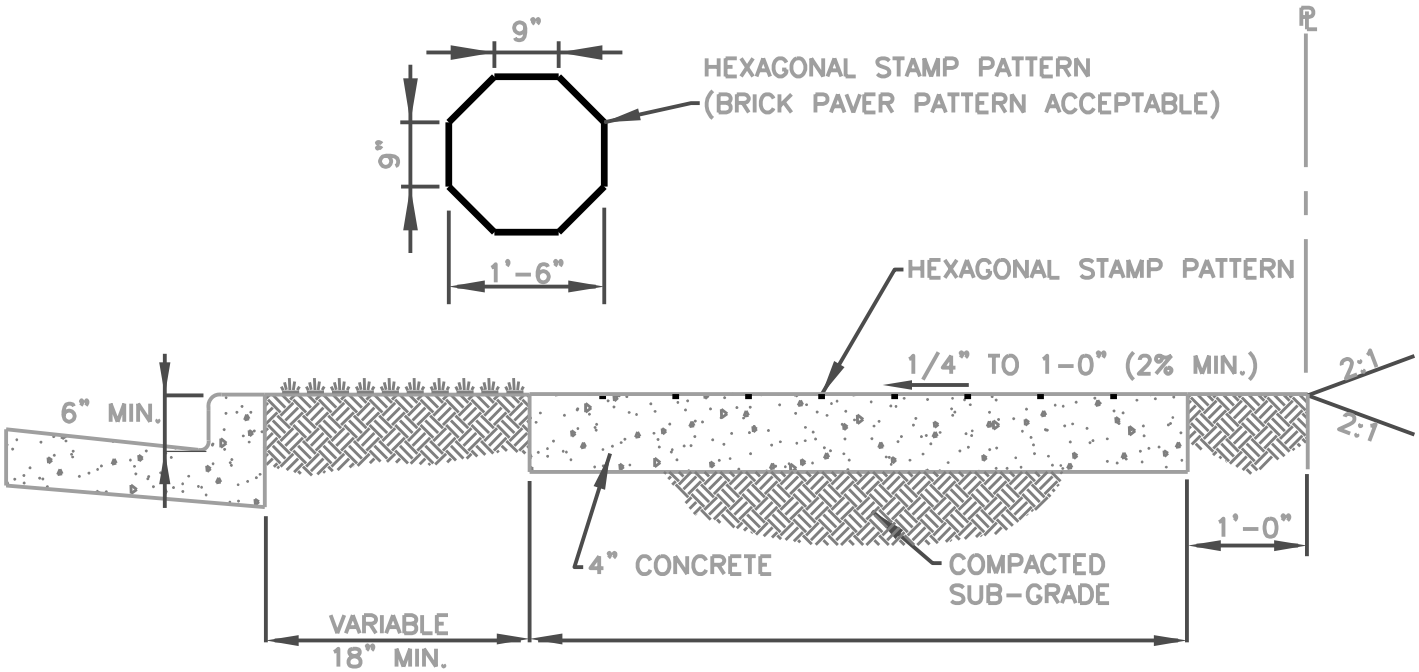

NOTES:

1. CONCRETE TO BE 3000 P.S.I. MIN.
2. EXPANSION MATERIAL SHALL BE PLACED BETWEEN ALL FIXED OBJECTS (EXCEPT CURB) AND THE NEW CONCRETE SIDEWALK.
3. IF GRASS STRIP IS LESS THAN 18" SIDEWALK SHALL EXTEND TO BACK OF CURB.
4. SAMPLE PANEL SHALL BE REQUIRED FOR REVIEW AND APPROVAL PRIOR TO SIDEWALK REPLACEMENT.

THIS DETAIL WAS TAKEN FROM THE CITY OF ATLANTA'S WEBSITE. IT MAY HAVE BEEN MODIFIED AND SHOULD BE REVIEWED THOROUGHLY.

City of Atlanta	STANDARD DETAILS	REV. DATE: SEPT 2011 ORIG. DATE: NOV 2004 SCALE: N.T.S.
	IMPRINTED SIDEWALK	DETAIL NO. TR-B_SW005

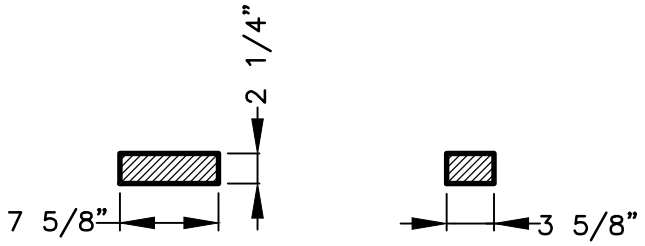

COMMON PAVING BRICK

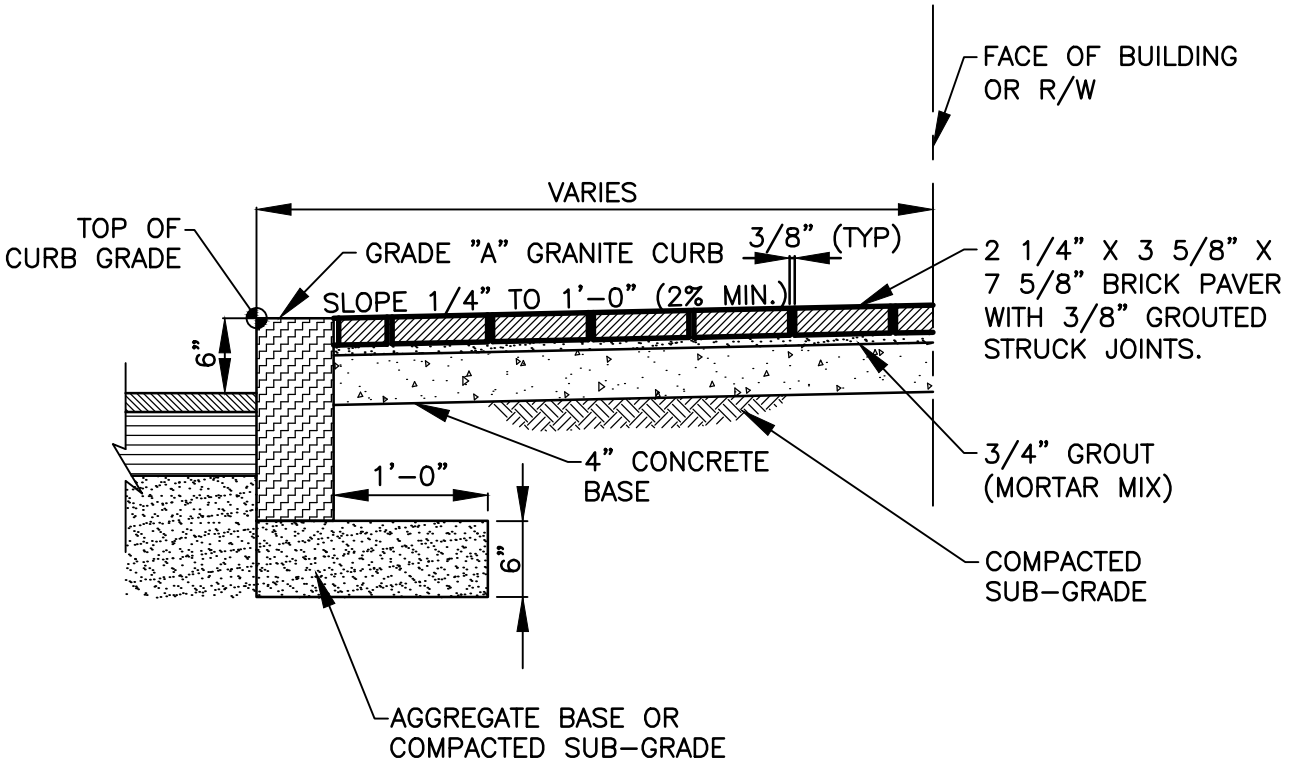

THIS DETAIL WAS TAKEN FROM THE CITY OF ATLANTA'S WEBSITE. IT MAY HAVE BEEN MODIFIED AND SHOULD BE REVIEWED THOROUGHLY.

City of Atlanta	STANDARD DETAILS	REV. DATE: SEPT 2011 ORIG. DATE: JAN 1997 SCALE: N.T.S.
	BRICK SIDEWALK	DETAIL NO. TR-B_SW006

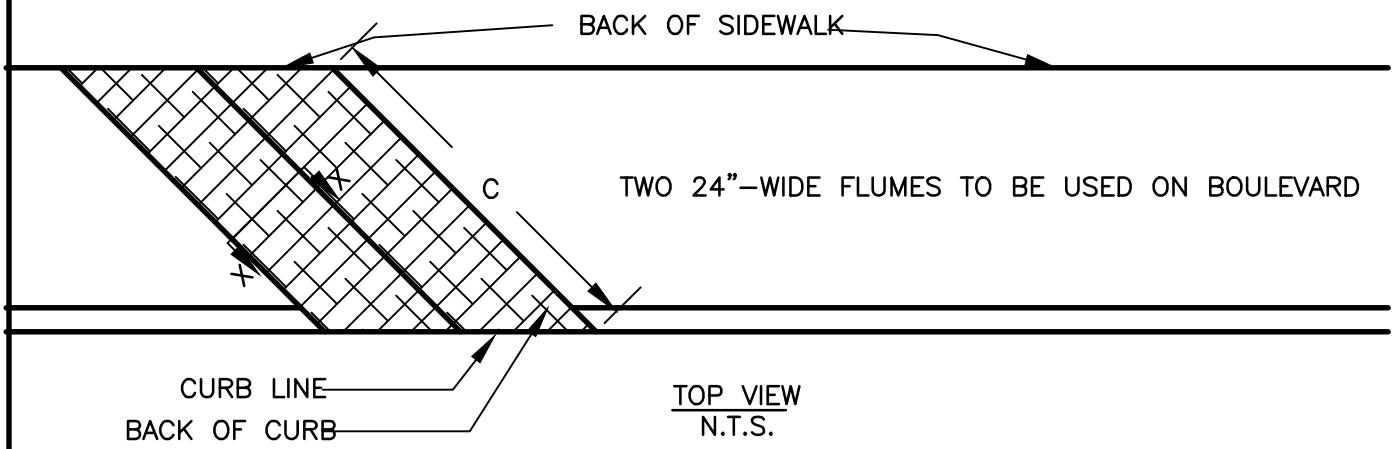

TOP VIEW
N.T.S.

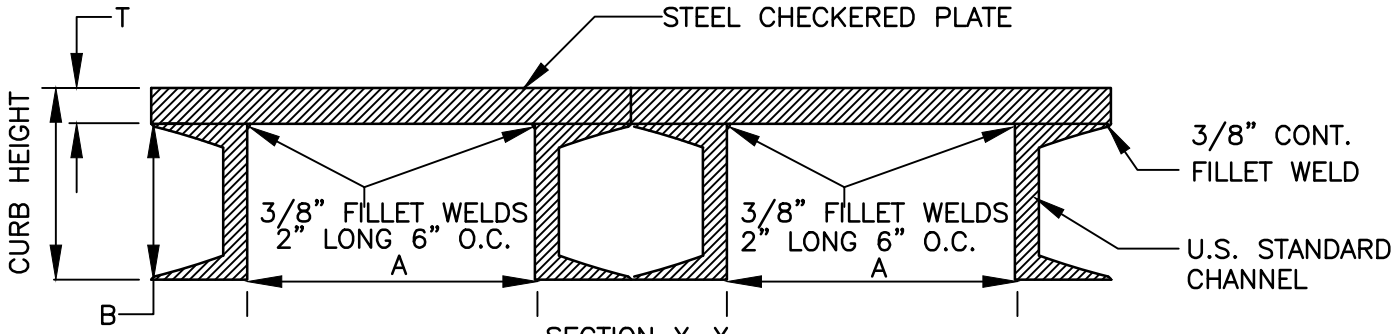

SECTION X–X
N.T.S.

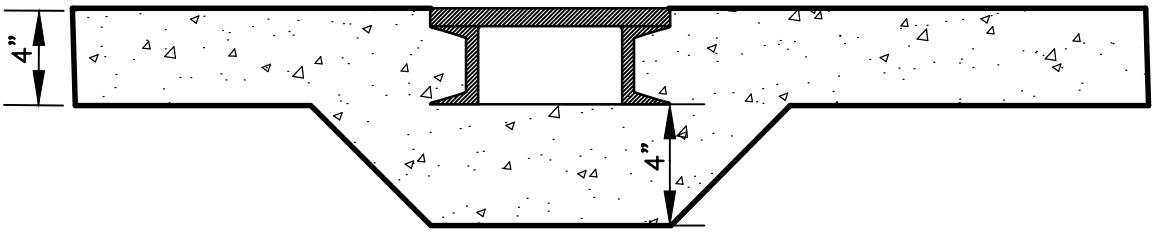

FLUME IN PLACE
N.T.S.

A	T	T(1)
12"	3/8"	1/2"
15"	3/8"	9/16"
18"	7/16"	5/8"
21"	1/2"	3/4"
24"	9/16"	13/16"

NOTE: "T" FOR PEDESTRIAN TRAFFIC ONLY

DIMENSIONS: A= _____, B= _____

C= _____, T= _____

NOTE:
1. ALL MATERIAL NEW STRUCTURAL STEEL.
2. MATERIAL AND WORKMANSHIP TO BE OF BEST QUALITY AND SUBJECT TO THE APPROVAL OF THE DEPT. OF PUBLIC WORKS.
3. ENDS TO BE: _ SQUARE
_ SKEWED TO RIGHT AS SHOWN ABOVE.
_ SKEWED TO LEFT AS SHOWN ABOVE.

THIS DETAIL WAS TAKEN FROM THE CITY OF ATLANTA'S WEBSITE. IT MAY HAVE BEEN MODIFIED AND SHOULD BE REVIEWED THOROUGHLY.

City of Atlanta

STANDARD DETAILS

STANDARD SIDEWALK FLUME

REV.
DATE: SEPT 2011
ORIG. DATE: JAN 1997
SCALE: N.T.S.

DETAIL NO. TR–B_SW009

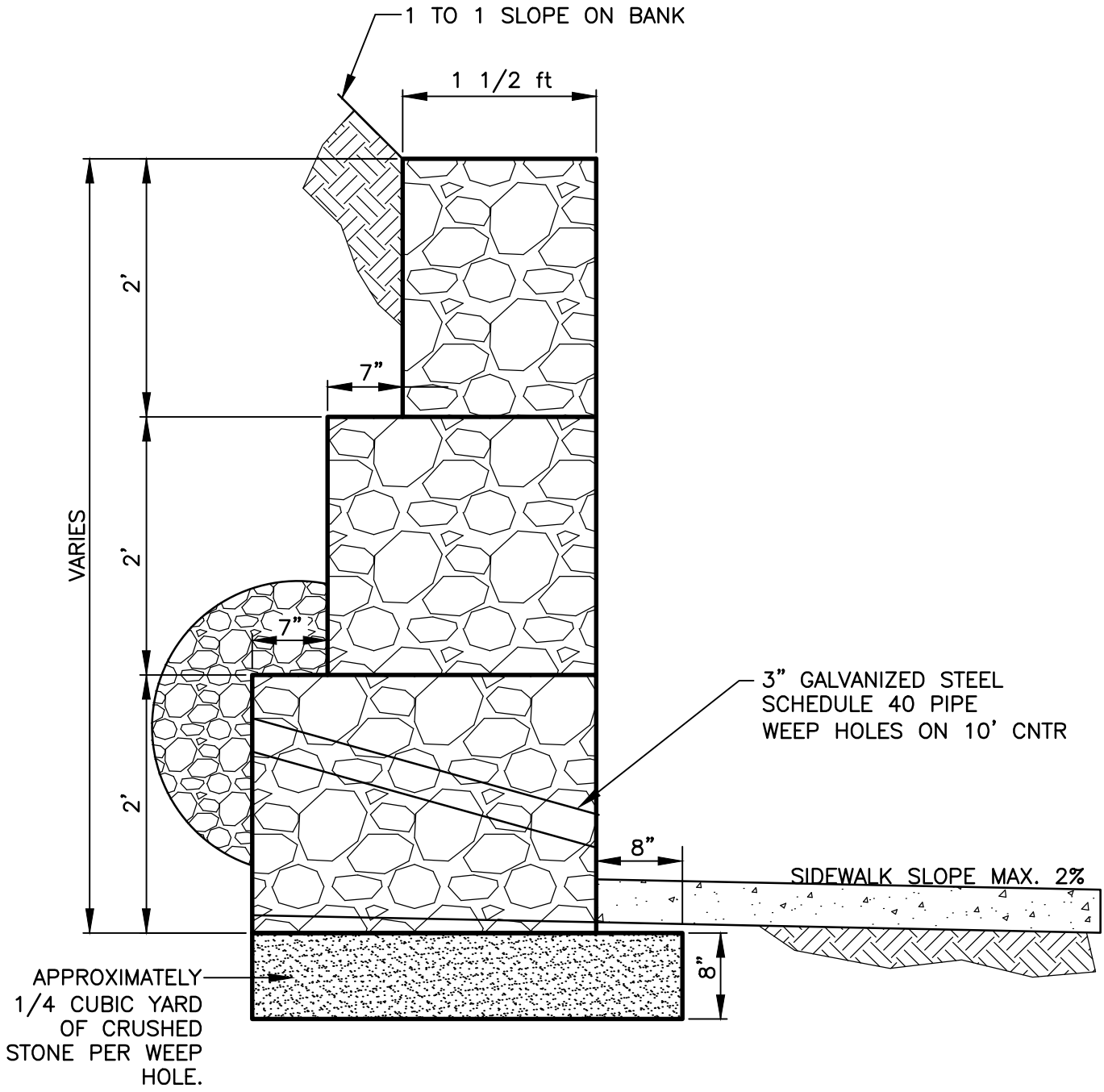

THIS DETAIL WAS TAKEN FROM THE CITY OF ATLANTA'S WEBSITE. IT MAY HAVE BEEN MODIFIED AND SHOULD BE REVIEWED THOROUGHLY.

City of Atlanta	STANDARD DETAILS	REV. DATE: SEPT 2011 ORIG. DATE: JAN 1997 SCALE: N.T.S.
	STANDARD MASONARY WALL	DETAIL NO. TR–B_WA001

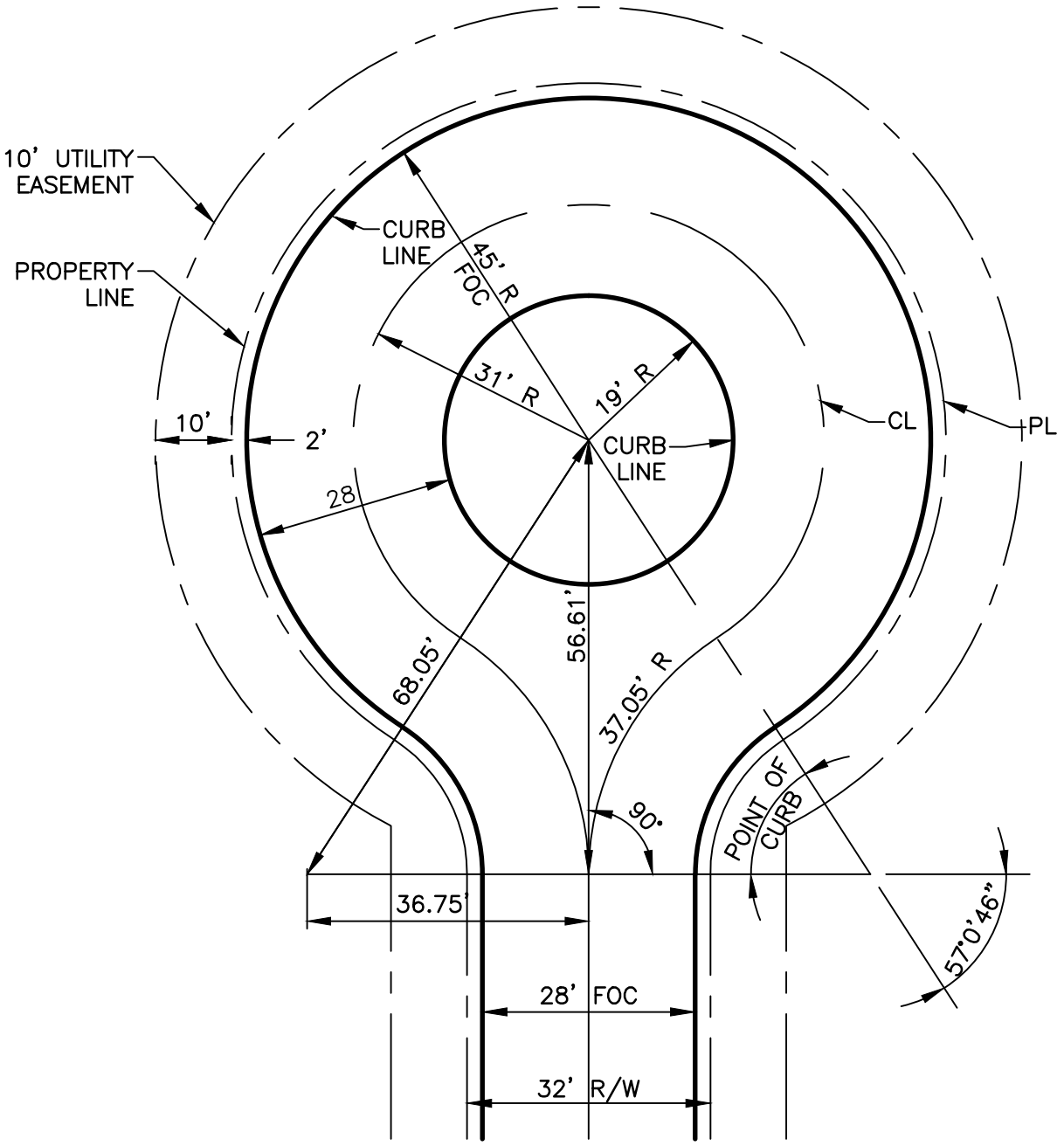

THIS DETAIL WAS TAKEN FROM THE CITY OF ATLANTA'S WEBSITE. IT MAY HAVE BEEN MODIFIED AND SHOULD BE REVIEWED THOROUGHLY.

City of Atlanta	STANDARD DETAILS	REV.
	TYPICAL CUL-DE-SAC FOR 32' R/W, 28' STREET (SYMMETRICAL)	DATE: OCT. 2011 ORIG. DATE: JULY 1997 SCALE: N.T.S.
		DETAIL NO. TR-G_CS001

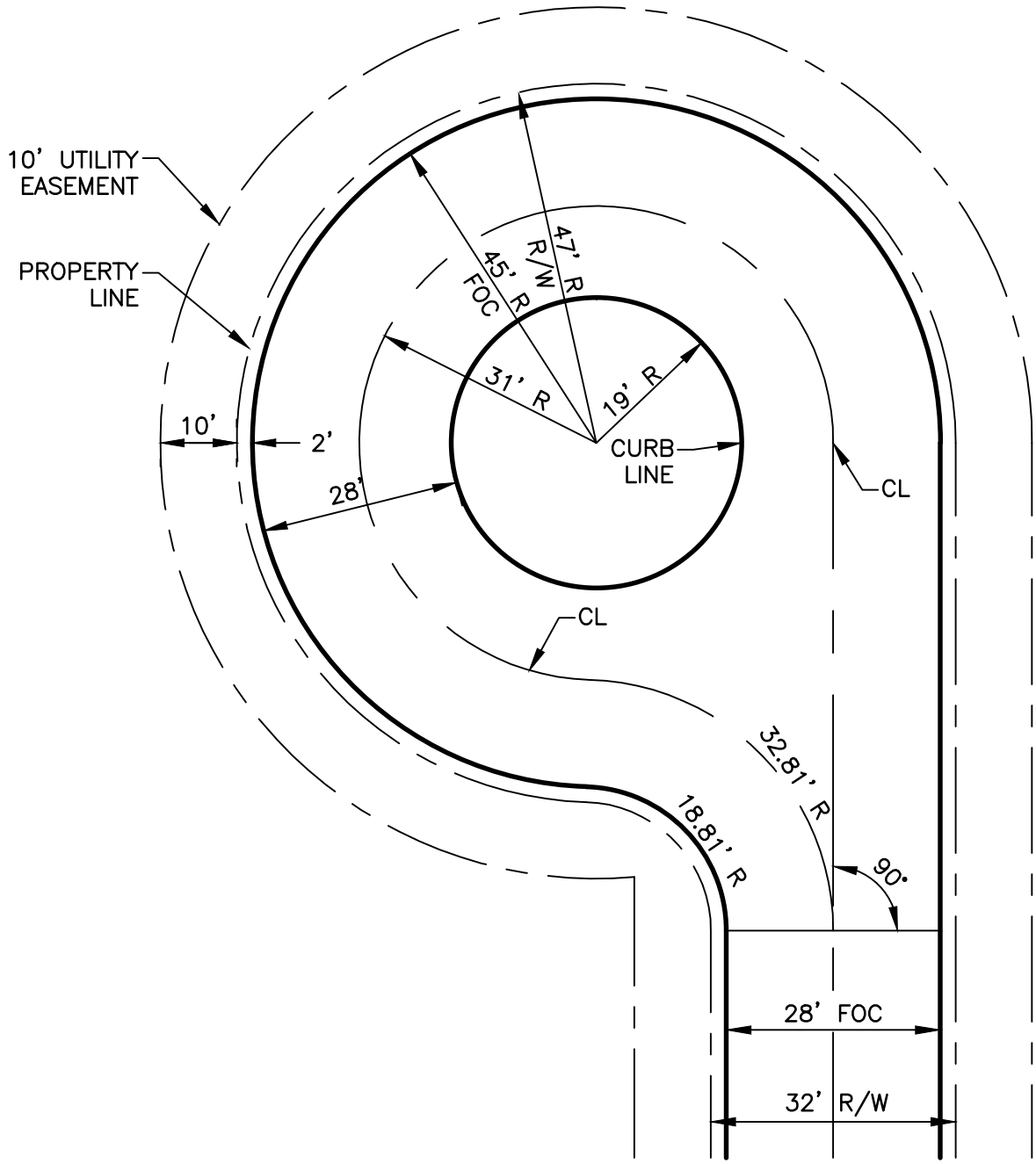

THIS DETAIL WAS TAKEN FROM THE CITY OF ATLANTA'S WEBSITE. IT MAY HAVE BEEN MODIFIED AND SHOULD BE REVIEWED THOROUGHLY.

City of Atlanta	STANDARD DETAILS	REV.
	TYPICAL CUL-DE-SAC FOR 32' R/W, 28' STREET (OFFSET)	DATE: OCT. 2011 ORIG. DATE: JULY 1997 SCALE: N.T.S.
		DETAIL NO. TR-G_CS002

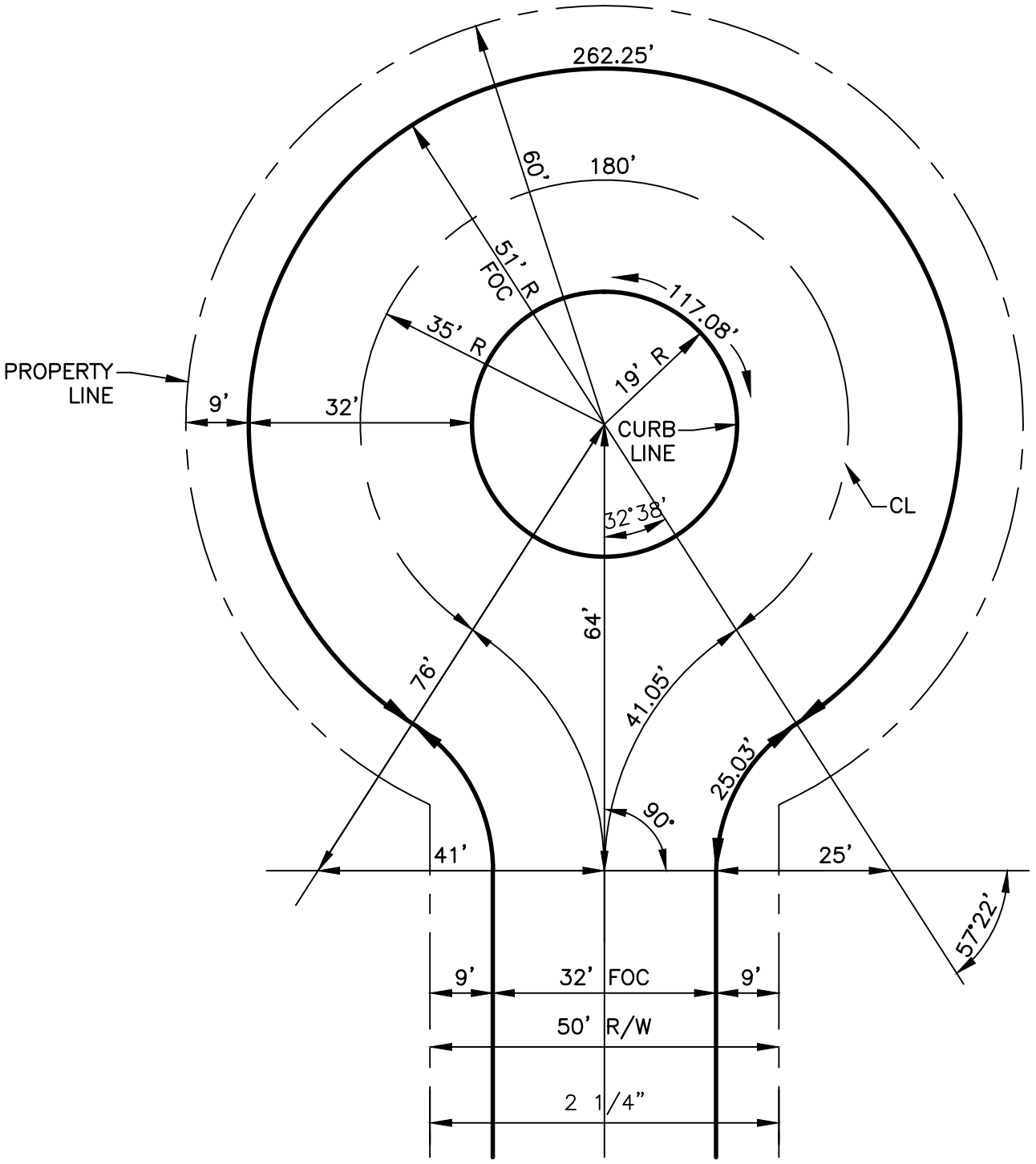

THIS DETAIL WAS TAKEN FROM THE CITY OF ATLANTA'S WEBSITE. IT MAY HAVE BEEN MODIFIED AND SHOULD BE REVIEWED THOROUGHLY.

City of Atlanta	STANDARD DETAILS	REV.
	TYPICAL CUL-DE-SAC FOR 50' R/W, 32' STREET (SYMMETRICAL)	DATE: OCT. 2011 ORIG. DATE: FEB. 1969 SCALE: N.T.S.
		DETAIL NO. TR-G_CS003

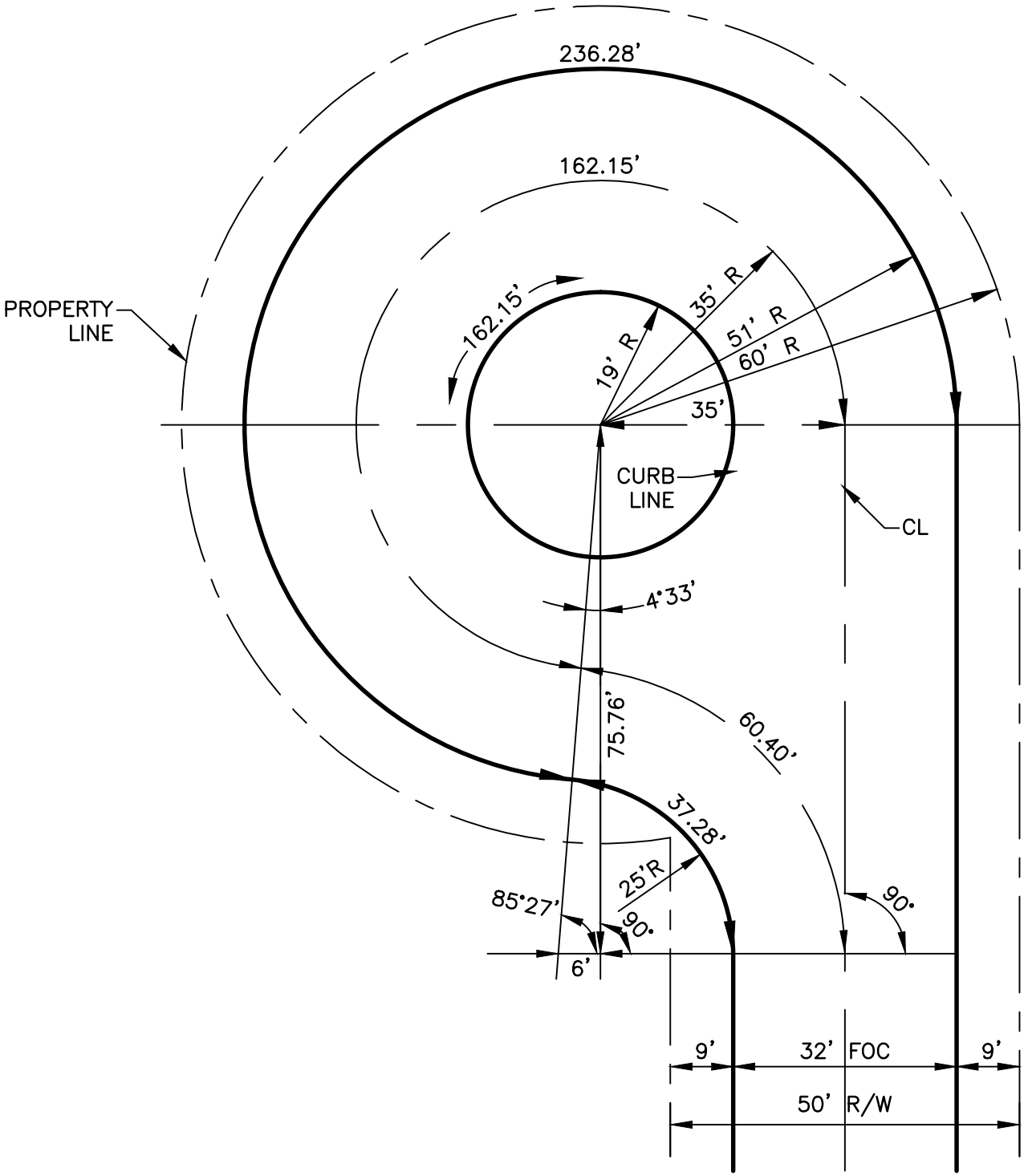

THIS DETAIL WAS TAKEN FROM THE CITY OF ATLANTA'S WEBSITE. IT MAY HAVE BEEN MODIFIED AND SHOULD BE REVIEWED THOROUGHLY.

City of Atlanta	STANDARD DETAILS	REV.
	TYPICAL CUL-DE-SAC FOR 50' R/W, 32' STREET (OFFSET)	DATE: OCT. 2011 ORIG. DATE: MARCH,1969 SCALE: N.T.S.
		DETAIL NO. TR-G_CS004

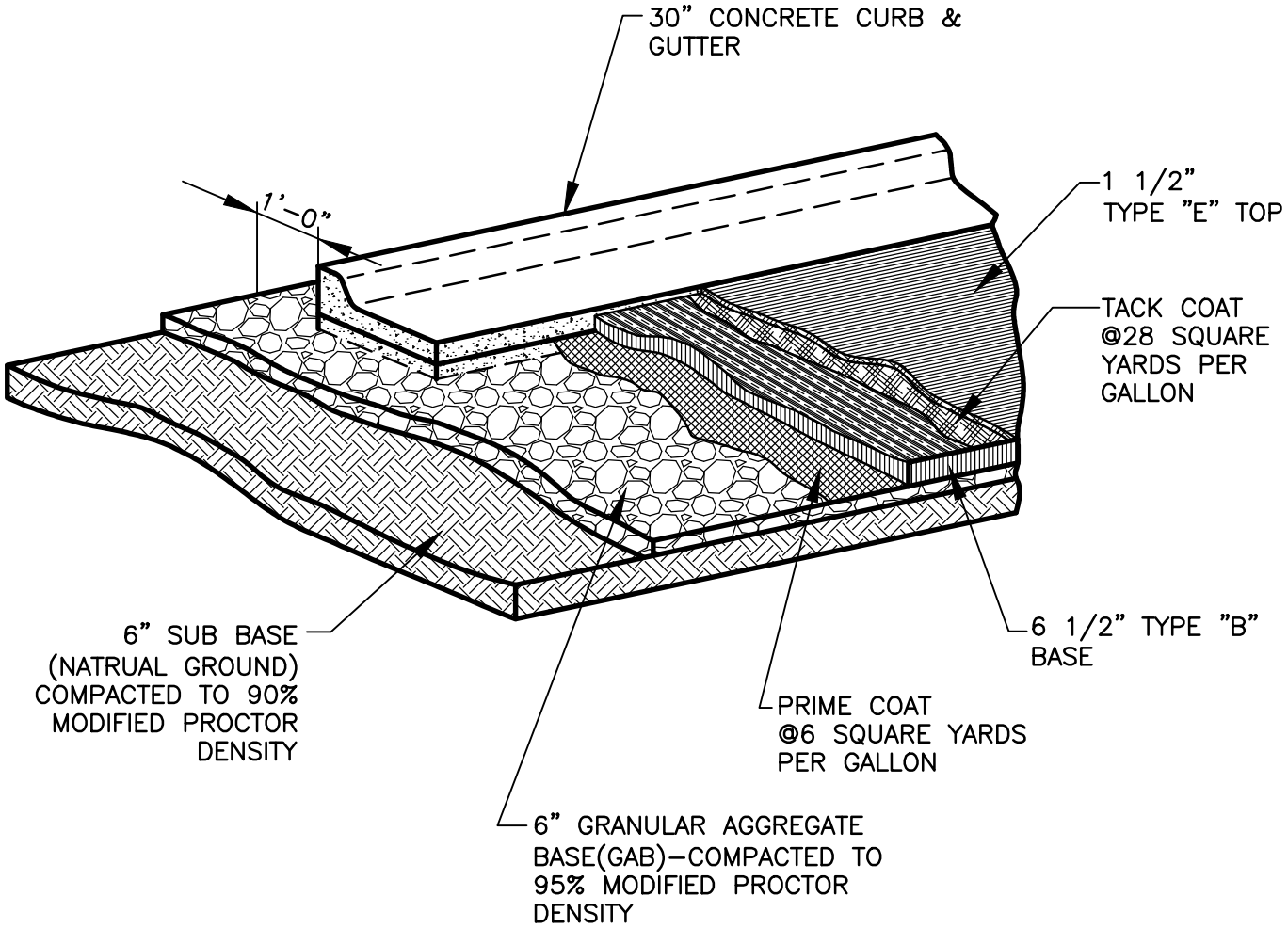

NOTE:
ASPHALTIC PAVEMENT SHALL BE INSTALLED IN ACCORDANCE WITH GEORGIA DOT SPECIFICATIONS. ASPHALTIC TYPES AND MIXES SHALL BE GEORGIA DOT APPROVED MIX TYPES.

THIS DETAIL WAS TAKEN FROM THE CITY OF ATLANTA'S WEBSITE. IT MAY HAVE BEEN MODIFIED AND SHOULD BE REVIEWED THOROUGHLY.

City of Atlanta	STANDARD DETAILS	REV. DATE: SEPT 2011 ORIG. DATE: NOV 2004 SCALE: N.T.S.
	COMMERCIAL STREET PAVEMENT SECTION	DETAIL NO. TR-G_PV009

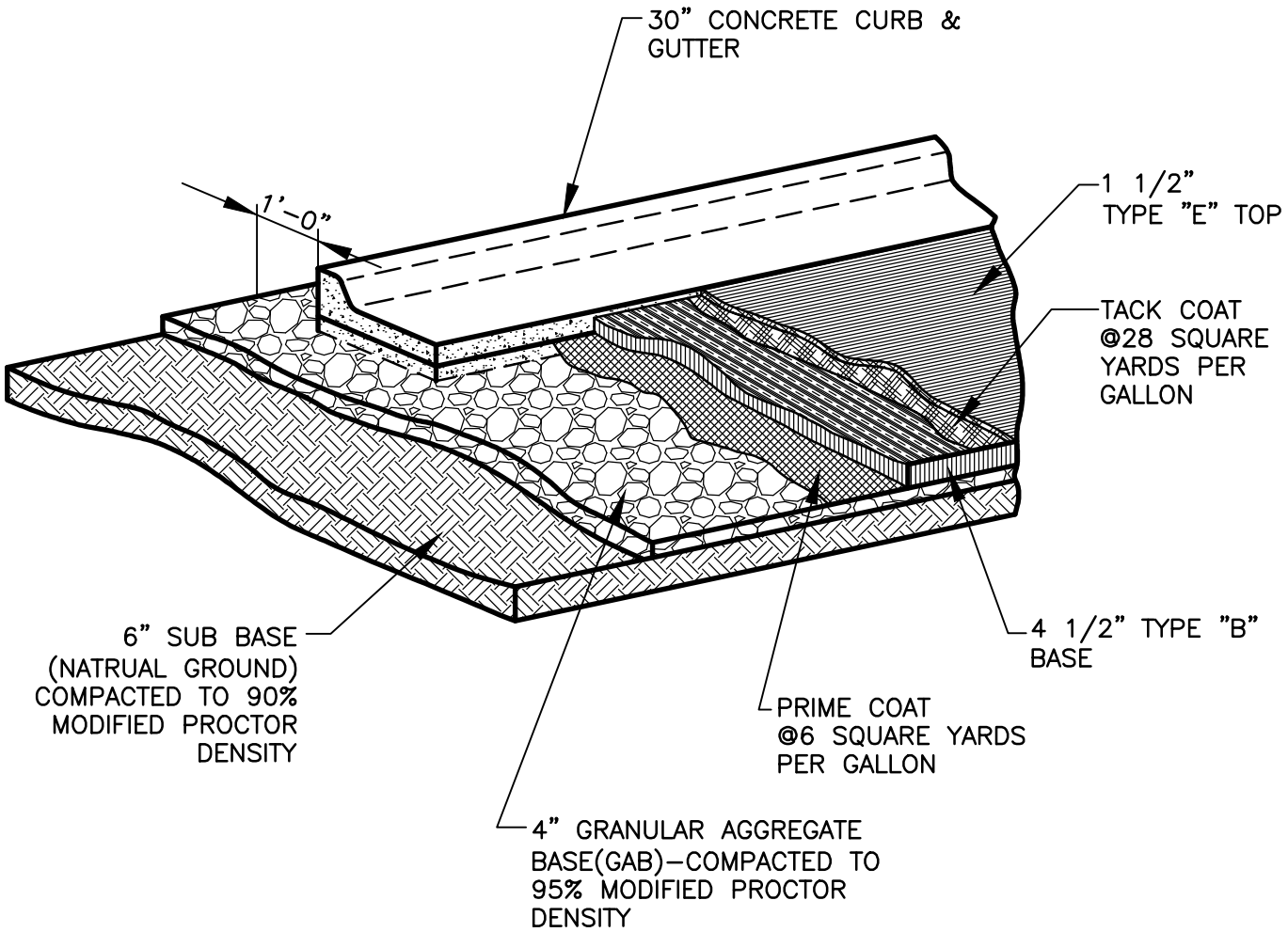

NOTE:
ASPHALTIC PAVEMENT SHALL BE INSTALLED IN ACCORDANCE WITH GEORGIA DOT SPECIFICATIONS. ASPHALTIC TYPES AND MIXES SHALL BE GEORGIA DOT APPROVED MIX TYPES.

THIS DETAIL WAS TAKEN FROM THE CITY OF ATLANTA'S WEBSITE. IT MAY HAVE BEEN MODIFIED AND SHOULD BE REVIEWED THOROUGHLY.

City of Atlanta	STANDARD DETAILS	REV. DATE: SEPT 2011 ORIG. DATE: NOV 2004 SCALE: N.T.S.
	RESIDENTIAL STREET PAVEMENT SECTION	DETAIL NO. TR–G_PV010

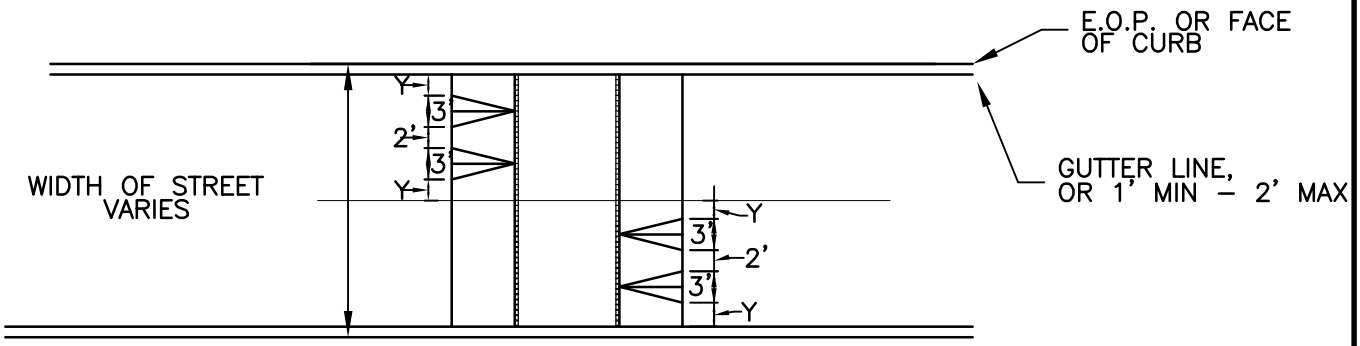

TOP VIEW
N.T.S.

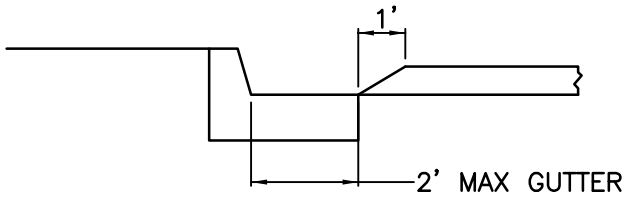

SECTION A–A
N.T.S.

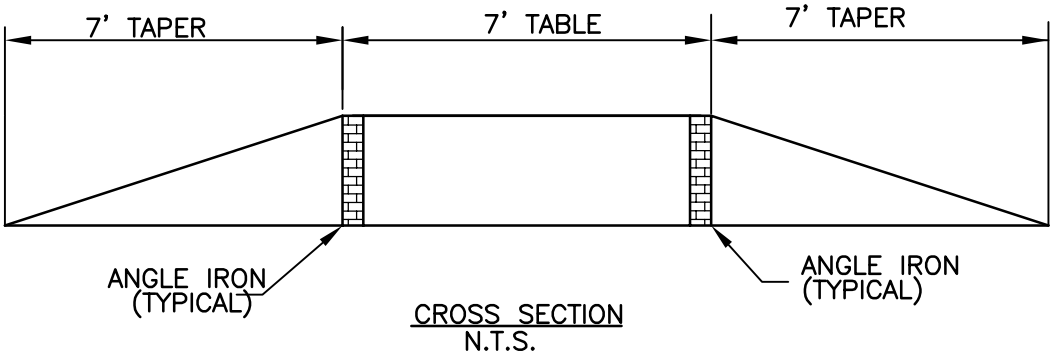

CROSS SECTION
N.T.S.

THIS DETAIL WAS TAKEN FROM THE CITY OF ATLANTA'S WEBSITE. IT MAY HAVE BEEN MODIFIED AND SHOULD BE REVIEWED THOROUGHLY.

City of Atlanta	STANDARD DETAILS	REV. DATE: SEPT 2011 ORIG. DATE: NOV 2004 SCALE: N.T.S.
	SPEED HUMP	DETAIL NO. TR–G_SH001

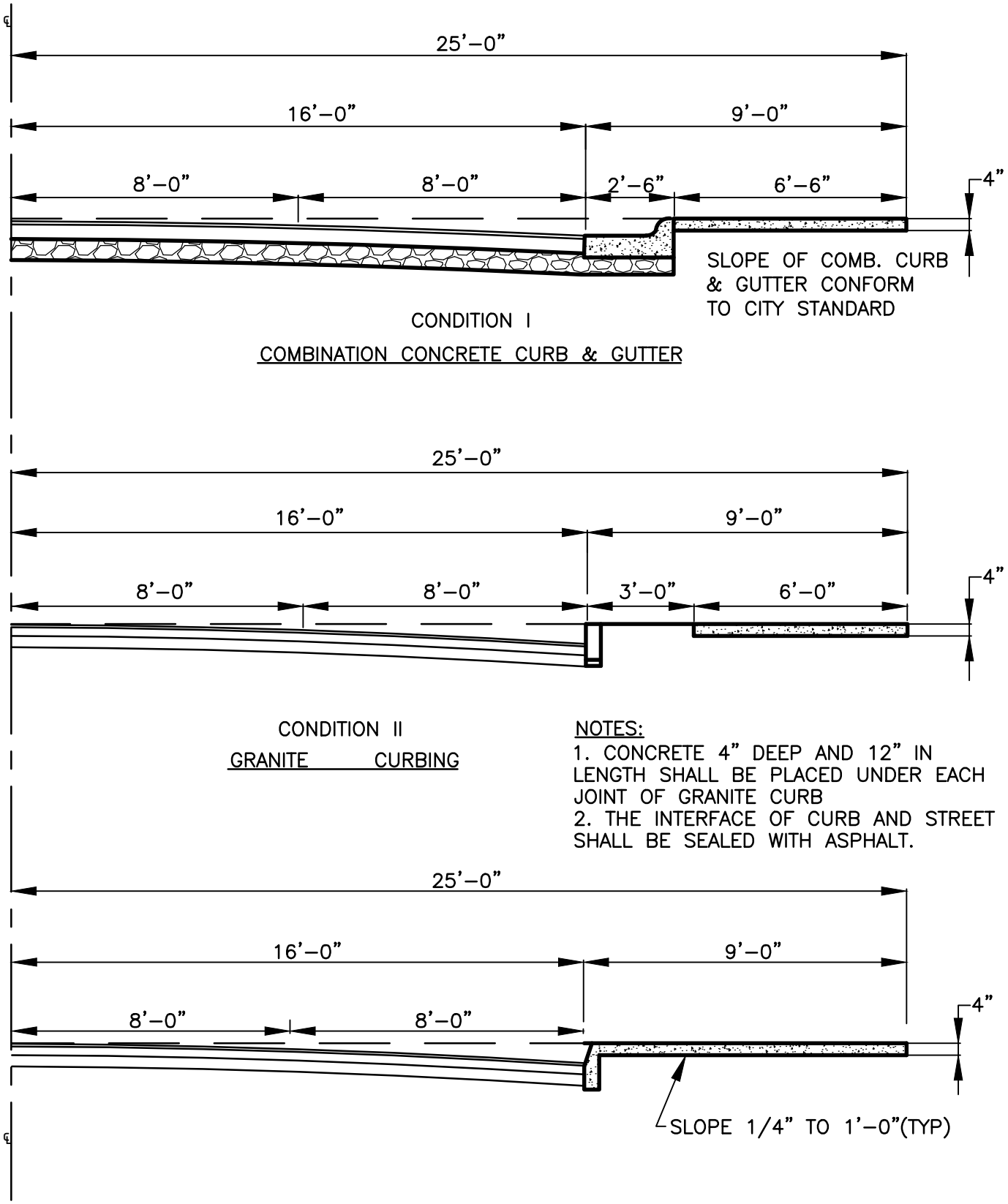

NOTES:
1. CONCRETE 4" DEEP AND 12" IN LENGTH SHALL BE PLACED UNDER EACH JOINT OF GRANITE CURB
2. THE INTERFACE OF CURB AND STREET SHALL BE SEALED WITH ASPHALT.

THIS DETAIL WAS TAKEN FROM THE CITY OF ATLANTA'S WEBSITE. IT MAY HAVE BEEN MODIFIED AND SHOULD BE REVIEWED THOROUGHLY.

City of Atlanta	STANDARD DETAILS	REV.
		DATE: SEPT 2011
	STANDARD STREETS WITH 50' R/W SIDEWALK	ORIG. DATE: NOV 2004
		SCALE: N.T.S.
		DETAIL NO. TR–G_SS001

CROWN DATA				
TYPE ROAD	STREET WIDTH	PAVING WIDTH	℄ BELOW CURB	QTR–PT. BELOW CURB
COND.I	36'–0"	32'–0"	1"	2 1/2"
COND.II	32'–0"	32'–0"	2"	3 1/2"
COND.III	32'–0"	32'–0"	2"	3 1/2"

THIS DETAIL WAS TAKEN FROM THE CITY OF ATLANTA'S WEBSITE. IT MAY HAVE BEEN MODIFIED AND SHOULD BE REVIEWED THOROUGHLY.

City of Atlanta

STANDARD DETAILS

STANDARD STREETS
CROWN DATA

REV.
DATE: SEPT 2011
ORIG. DATE: JAN 1997
SCALE: N.T.S.

DETAIL NO. TR–G_SS002

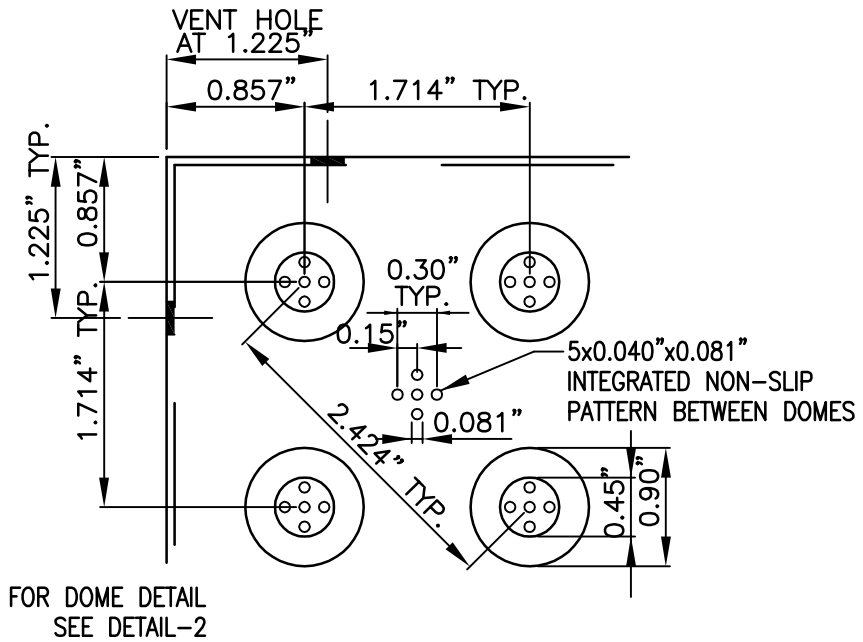

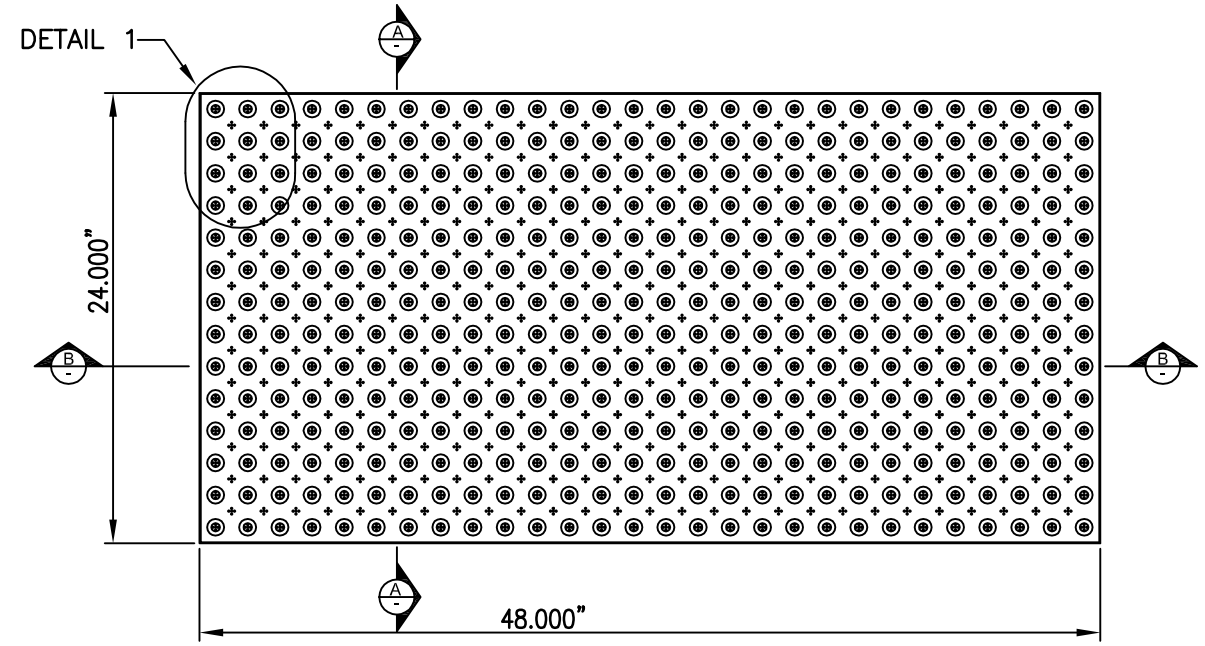

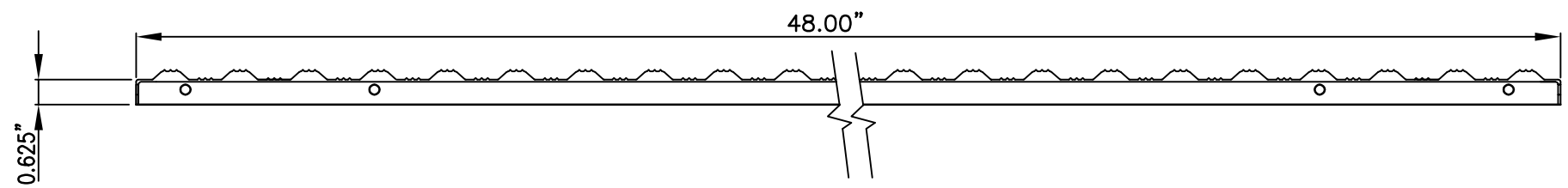

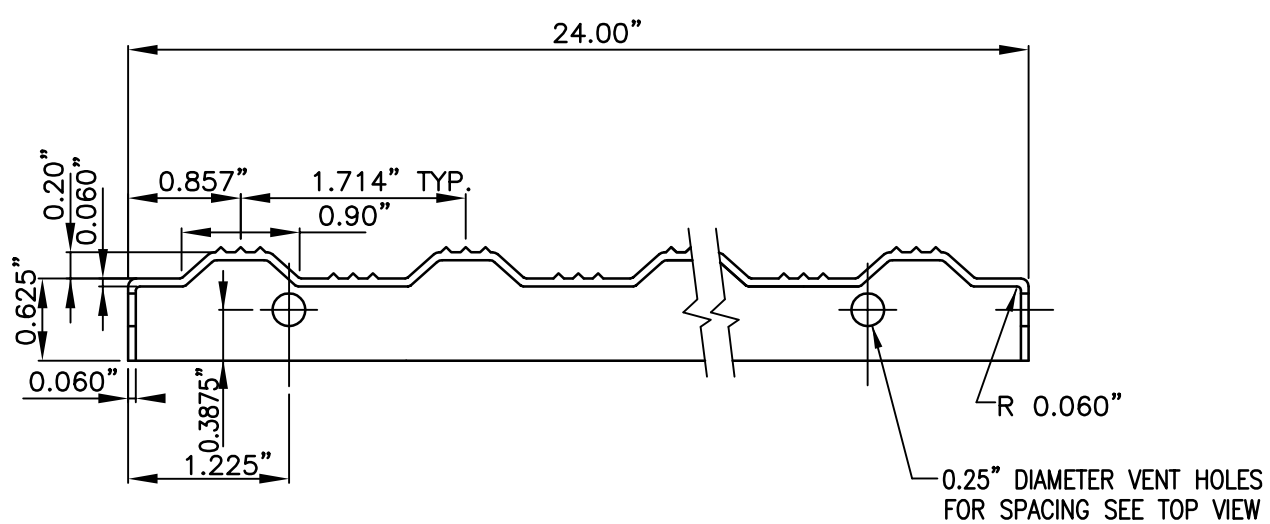

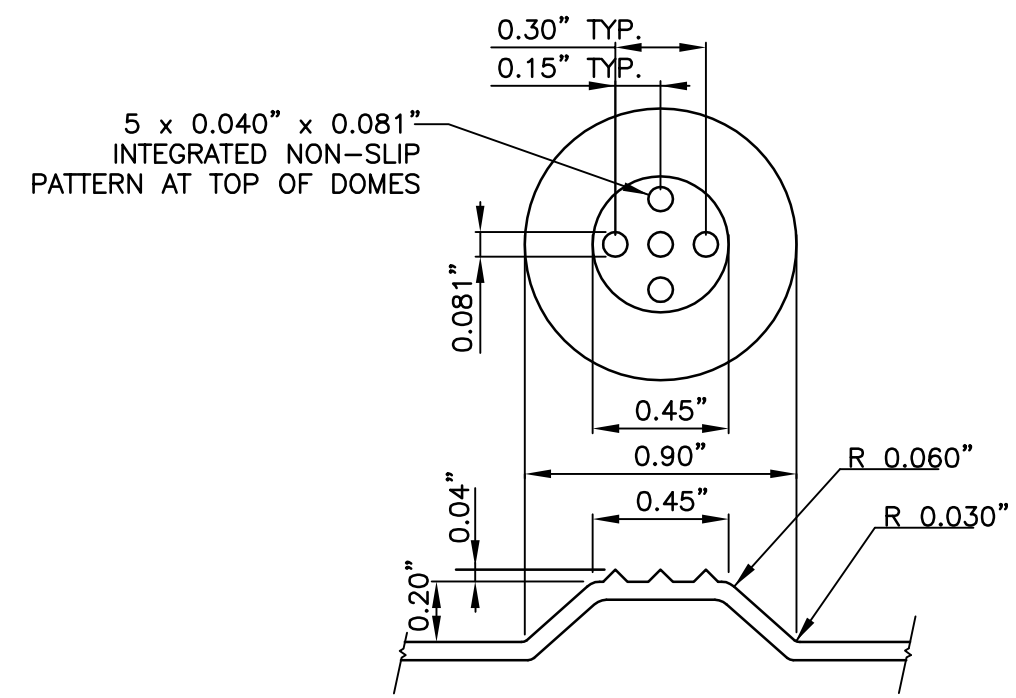

THIS DETAIL WAS TAKEN FROM THE CITY OF ATLANTA'S WEBSITE. IT MAY HAVE BEEN MODIFIED AND SHOULD BE REVIEWED THOROUGHLY.

City of Atlanta

STANDARD DETAILS

TRUNCATED DOME DETAIL

DATE: SEPT 2011
ORIG. DATE: NOV 2004
SCALE: N.T.S.

DETAIL NO. TR-G_SW010

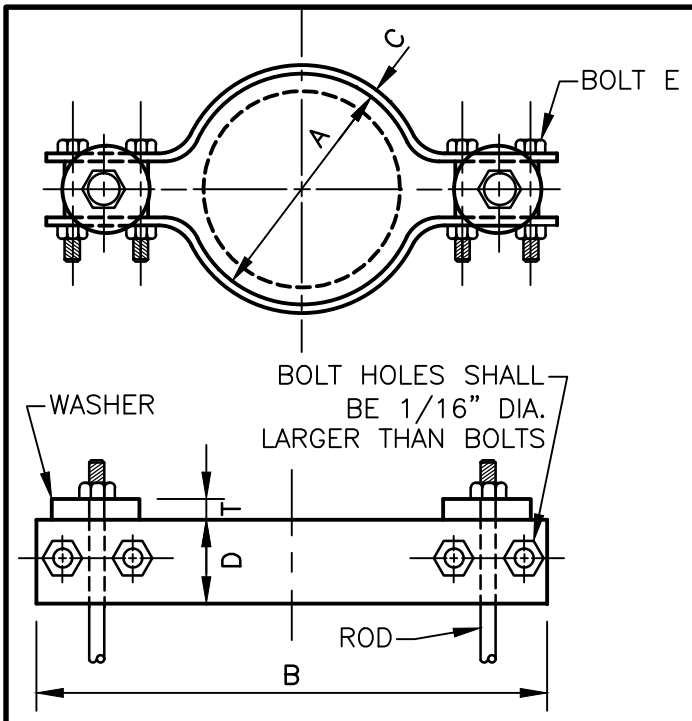

STEEL SOCKET CLAMP

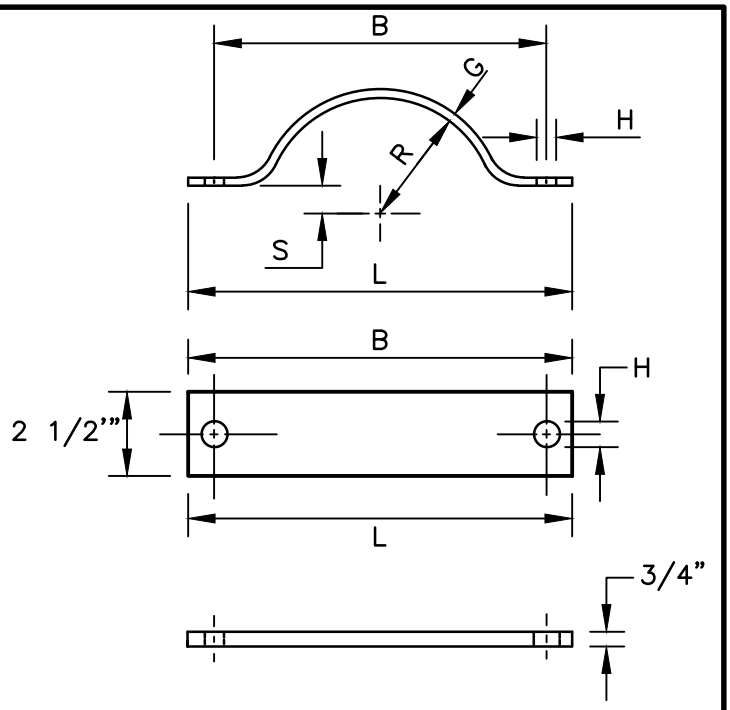

PLUG ANCHOR STRAP

STEEL SOCKET CLAMP (ABOVE) DIMENSIONS (INCHES)							
PIPE SIZE	A	B	C	D	BOLT E	T	ROD & C.I. WASH SIZE
4	5	14 5/8	1/2	2	5/8 x 3 1/2	5/8	3/4
6	7 1/8	16 7/8	1/2	2	5/8 x 3 1/2	5/8	3/4
8	9 5/16	19 1/8	1/2	2 1/2	5/8 x 3 1/2	5/8	3/4
10	11 1/2	21 3/8	5/8	2 1/2	5/8 x 3 1/2	3/4	1
12	13 1/2	25 1/8	5/8	3	5/8 x 3 1/2	3/4	1
14	15 3/4	28 1/4	5/8	3	5/8 x 3 1/2	7/8	1 1/8
16	17 7/8	31 3/8	3/4	3	1 x 4 1/2	7/8	1 1/8
18	20	35 1/8	3/4	4	1 1/4 x 5	1 1/8	1 1/4
20	22 1/8	37 3/4	3/4	4 1/2	1 1/4 x 5	1 1/8	1 3/8
24	26 3/8	44 1/4	3/4	5	1 1/2 x 5 1/2	1 1/4	1 1/2

MATERIAL: GRINNELL FIG.600 OR APPROVED GOAL

PLUG ANCHOR STRAP DETAILS (ABOVE) DIMENSIONS (INCHES) SEE GENERAL NOTE NO.2						
FITTING SIZE	B	G	H	L	R	S
4	10 1/8	5/8 x 2 1/2	13/16	12 1/2	2 1/2	3/4
6	12 1/8	5/8 x 2 1/2	13/16	14 1/4	3 9/16	3/4
8	14 3/8	5/8 x 2 1/2	13/16	16 3/4	4 21/32	3/4
10	16 11/16	5/8 x 2 1/2	1 1/16	19 1/16	5 3/4	3/4
12	19 3/16	5/8 x 3	1 1/16	22 5/16	6 3/4	7/8

GENERAL NOTES:

1. INSTALLATION OF MATERIALS FOR RODS, CLAMPS, STRAPS, BOLTS AND WASHERS, SHALL CONFORM TO THE NATIONAL FIRE CODES–NFPA. NO.24 LATEST REVISION.
2. YOKES AND ANCHOR STRAPS FOR FITTING LARGER THAN 12" SHALL DESIGNED AND APPROVED FOR THE SPECIFIC INSTALLATION.
3. RODS TO BE HIGH TENSILE, HOT ROLLED STEEL WITH TENSILE STRENGTH OF 150,000 PSI AND A MINIMUM YIELD STRENGTH OF 130,000 PSI.
4. NUTS TO BE HEAVY DUTY SEMI–FINISHED WITH NATIONAL COURSE THREADS.
5. AFTER INSTALLATION TIE RODS AND CLAMP ASSEMBLY SHALL BE THOROUGHLY COVERED WITH ROYSTON LABORATORIES INC. ROSKOTE MASTIC NO. A939 OR KOPPERS CO. INC. BITUMASTIC SUPERSERVICE BLACK OR APPROVED EQUIVALENT.

THIS DETAIL WAS TAKEN FROM THE CITY OF ATLANTA'S WEBSITE. IT MAY HAVE BEEN MODIFIED AND SHOULD BE REVIEWED THOROUGHLY.

City of Atlanta

STANDARD DETAILS

TYPICAL STRAP AND ROD DETAIL

REV.
DATE: OCT. 2011
ORIG. DATE: NOV. 2004
SCALE: N.T.S.

DETAIL NO. WR–G_AN001

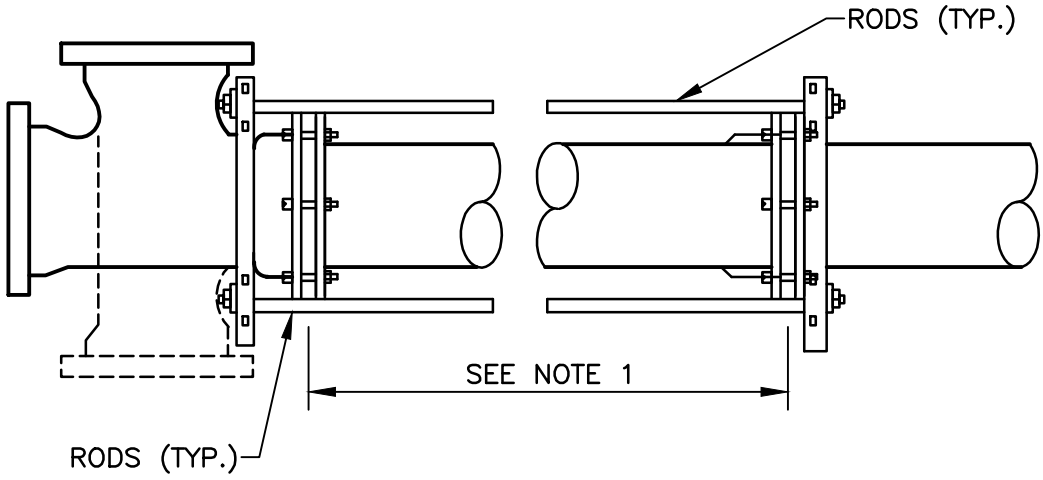

TEE ANCHOR

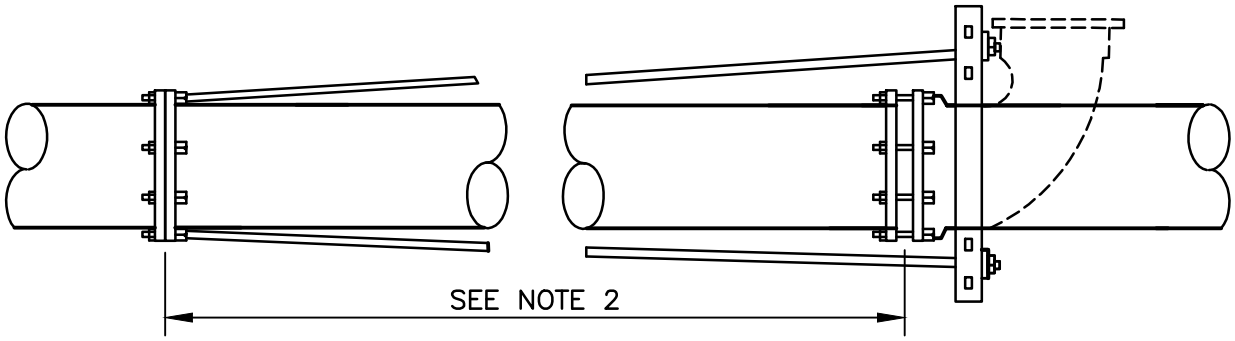

PIPE OR BEVD ANCHOR TO FLANGE SPIGOT

NOTES:

1. IN THE ASSEMBLIES OF RODS AND CLAMPS SHOWN, RODS RUNS FROM A LUG ON THE FITTING (OR A CLAMP BEHIND THE HUB OF A BELL) TO A CLAMP AGAINST THE FACE OF A BELL NOTE THAT THIS ARRANGEMENT ANCHORS ONLY ONE JOINT. THE STABILITY OF THE JOINT WHERE THE CLAMP IS AGAINST THE FACE OF THE BELL DEPENDS ON HAVING SOIL ABOVE A RELATIVELY LONG PIECE OF PIPE ON BOTH SIDES OF THE JOINT. CONSEQUENTLY, IF THE DISTANCE BETWEEN THE FIRST AND SECOND JOINT IS LESS THAN 12 FEET, THE SECOND JOINT SHOWN SHALL BE ANCHORED BY A CLAMP BEHIND THE HUB OF THE BELL AND RODS TO A CLAMP AT THE FACE OF THE NEXT BELL.
2. IN THE ASSEMBLIES SHOWN FOR RODS TO FLANGED FITTINGS IS NOT TO BE BURIED IN SOIL.
3. AFTER INSTALLATION TIE RODS AN CLAMP ASSEMBLY SHALL BE THOROUGHLY COVERED WITH ROYSTON LABOORATORIES INC. ROSKOTE MASTIC NO.A939 OR KOPPERS CO. INC. BITUMASTIC SUPERSERVICE BLACK OR APPROVED EQUIVALENT.
4. RODS TO BE HIGH TENSILE, HOT ROLLED STEEL WITH TENSILE STRENGTH OF 150,000 P.S.I. AND A MINIMUM YIELD STRENGTH OF 130,000 P.S.I..

THIS DETAIL WAS TAKEN FROM THE CITY OF ATLANTA'S WEBSITE. IT MAY HAVE BEEN MODIFIED AND SHOULD BE REVIEWED THOROUGHLY.

City of Atlanta	STANDARD DETAILS	REV. DATE: OCT. 2011 ORIG. DATE: OCT. 2004 SCALE: N.T.S.
	TYPICAL ANCHORS	DETAIL NO. WR-G_AN004

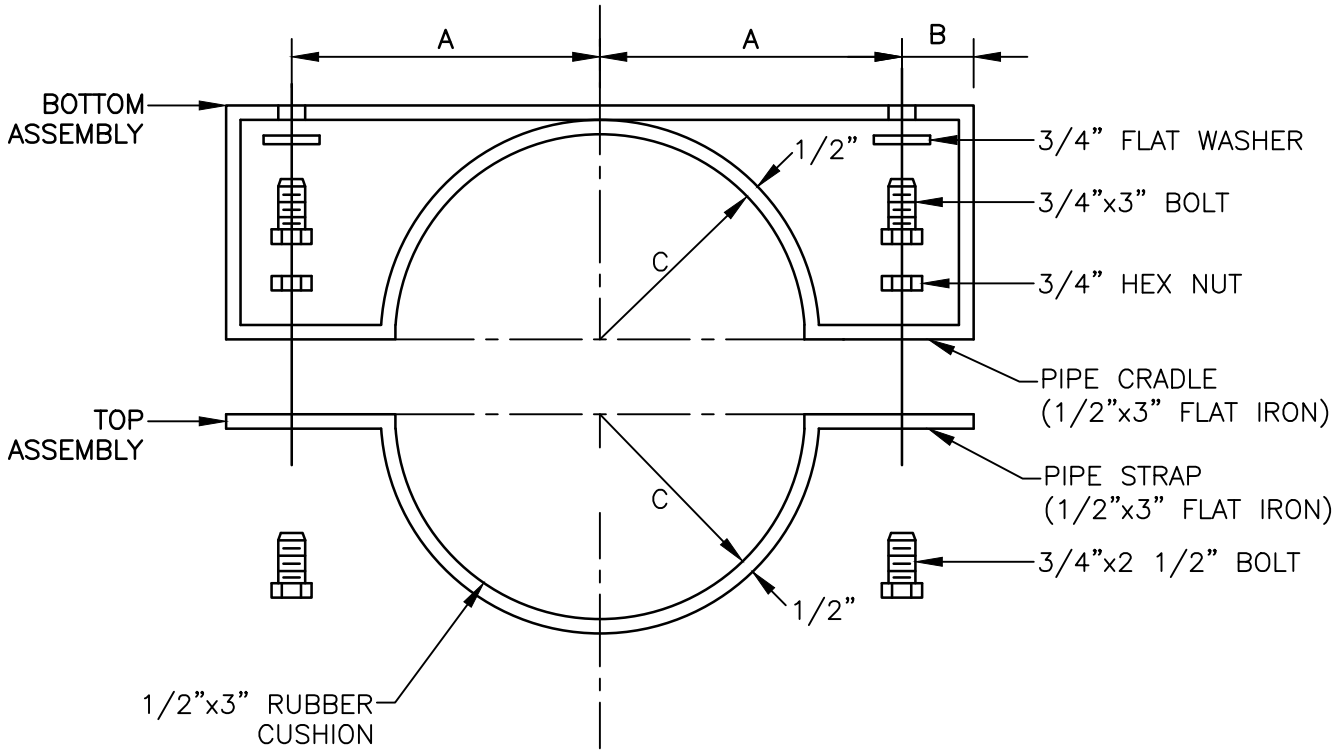

DIMENSIONS IN INCHES FOR PIPE HANGERS			
PIPE SIZE	A	B	C (RADIUS)
8"	6.53	2.00	4.53
12"	8.60	2.00	6.60
16"	10.70	2.00	8.70

NOTES:

1. PRIMER SHALL BE NO. 1–B ORANGE PRIMER AND CONFORM TO GEORGIA D.O.T. ARTICLE 870.02 PRIMER SHALL BE APPLIED TO A MINIMUM THICKNESS OF 4 MILS.
2. PAINT SHALL BE NO.3–A GREEN, BRUSHING, ROLLER AIRLESS TYPE AND CONFORM TO GEORGIA D.O.T. ARTICLE 870.02 PAINT SHALL BE APPLIED TO A MINIMUM THICKNESS OF 10 MILS.
3. TWO BOTTOM ASSEMBLIES USED TOGETHER MAYBE REQUIRED IN SOME INSTALLATIONS.

THIS DETAIL WAS TAKEN FROM THE CITY OF ATLANTA'S WEBSITE. IT MAY HAVE BEEN MODIFIED AND SHOULD BE REVIEWED THOROUGHLY.

City of Atlanta

STANDARD DETAILS

PIPE HANGER

REV.
DATE: OCT. 2011
ORIG. DATE: OCT. 2004
SCALE: N.T.S.

DETAIL NO. WR–G_AN005

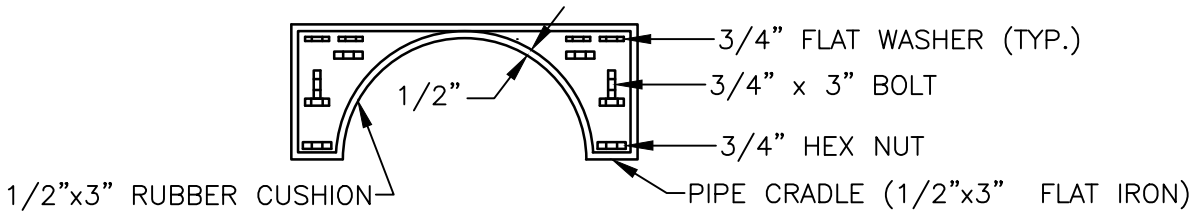

IN PLACE OF STRAPS PROVIDE IDENTICAL TOP AND BOTTOM ASSEMBLY AS SHOWN

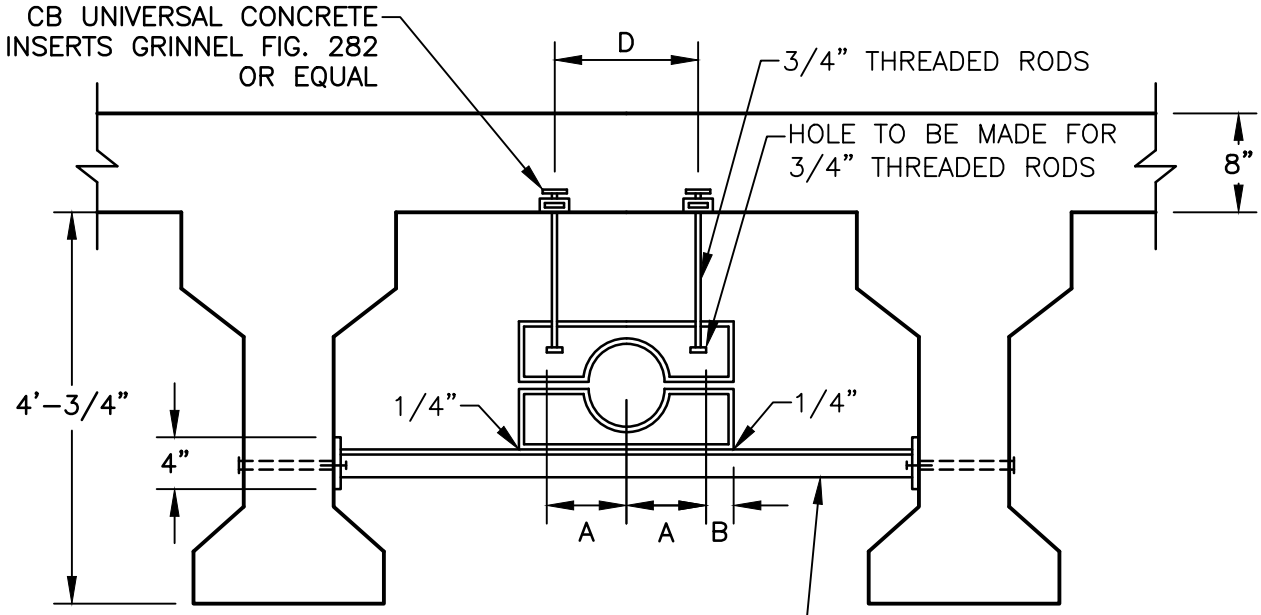

2 NOS. OF 05x6.7 BACK TO BACK TO BE USED IF 3/4" OF THREADED RODS ARE NOT USED
L 2 1/2"x2 1/2"x 1/4" ATTACH TO BOTH BEAMS W/RED HEADS @ TIME OF INSTALLATION OF WATER MAIN.

DIMENSIONS IN INCHES FOR PIPE HANGERS				
PIPE SIZE	A	B	C	D
8"	6.53	2.00	4.53	VARIES
12"	8.60	2.00	6.60	VARIES
16"	10.70	2.00	8.70	VARIES

NOTES:

1. PRIMER SHALL BE NO. 1-B ORANGE PRIMER AND CONFORM TO GEORGIA D.O.T. ARTICLE B 70.02 PRIMER SHALL BE APPLIED TO A MINIMUM THICKNESS OF 4 MILS.
2. PAINT SHALL BE NO.3-A GREEN, BRUSHING, ROLLE AIRLESS TYPE AND CONFORM TO GEORGIA D.O.T. ARTICLE 870.02 PAINT SHALL BE APPLIED TO A MINIMUM THICKNESS OF 10 MILS.
3. TWO BOTTOM ASSEMBLIES USED TOGETHER MAYBE REQUIRED IN SOME INSTALLATIONS.
4. PROVIDE TWO SUPPORTS PER JOINT, TWO FEET FROM JOINT.
5. DESIGN SUPPORTS DETAILS FOR WATER MAIN LARGER THAN 16 INCH.
6. STEEL SHALL BE A-36.
7. WELDING BE E-70xx.

THIS DETAIL WAS TAKEN FROM THE CITY OF ATLANTA'S WEBSITE. IT MAY HAVE BEEN MODIFIED AND SHOULD BE REVIEWED THOROUGHLY.

City of Atlanta

STANDARD DETAILS

TYPICAL HANGER DETAIL FOR CONCRETE BEAM BRIDGES

REV.
DATE: OCT. 2011
ORIG. DATE: NOV. 2004
SCALE: N.T.S.

DETAIL NO. WR-G_AN006

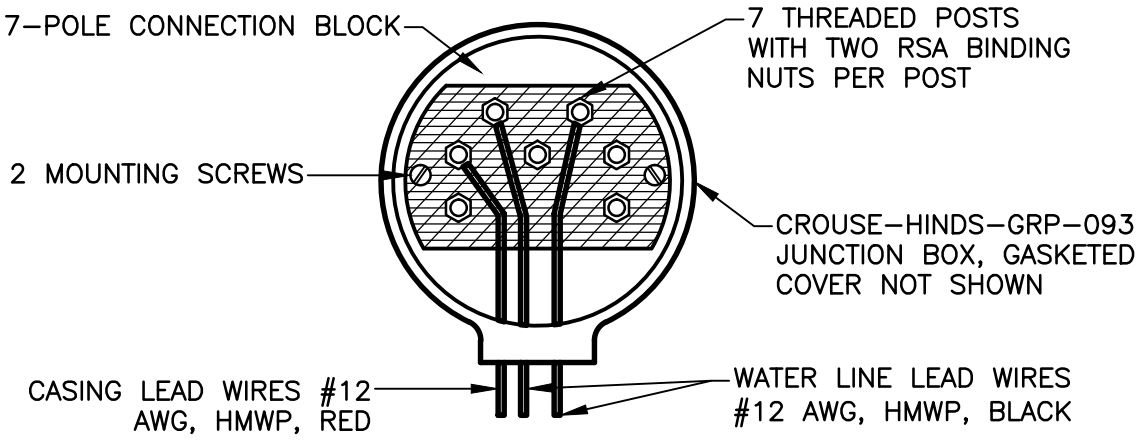

JUNCTION BOX DETAILS

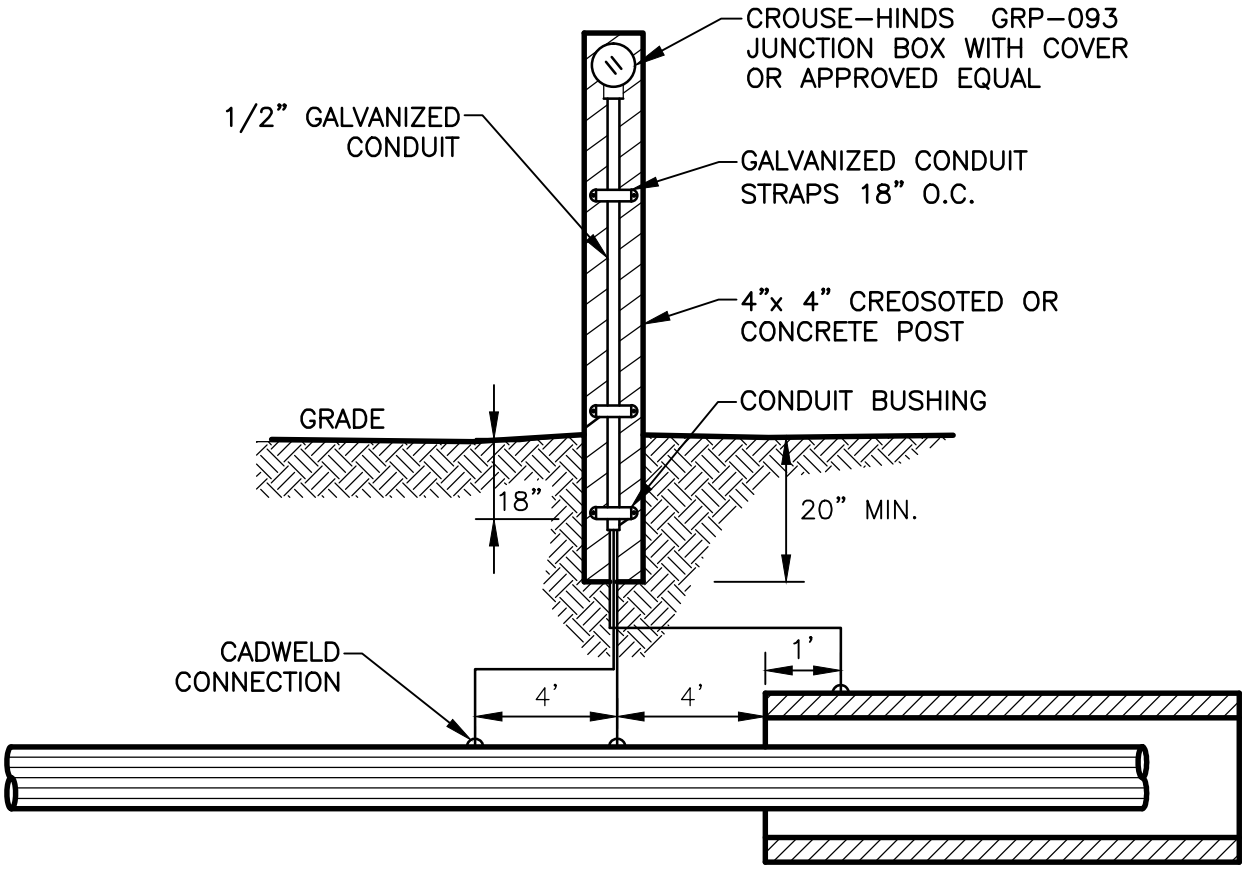

NOTES:

1. ALL WIRES TO BE #12 A.W.G. COPPER SINGLE CONDUCTOR, TW INSULATED LEAD WIRES TO BE COLOR CODED.
2. IF POSSIBLE, DELETE 4"x4" POST AND INSTALL TEST BOX AGAINST PERMANENT STRUCTURE.
3. MODIFICATION MAY BE MADE TO SUIT FIELD CONDITIONS.
4. CARE TO BE TAKEN DURING BACKFILLING TO PREVENT DAMAGE TO C.P. WIRES.

THIS DETAIL WAS TAKEN FROM THE CITY OF ATLANTA'S WEBSITE. IT MAY HAVE BEEN MODIFIED AND SHOULD BE REVIEWED THOROUGHLY.

City of Atlanta	STANDARD DETAILS	REV.
	TYPICAL PIPE-CASING CORROSION PROTECTION TEST LEADS	DATE: OCT. 2011 ORIG. DATE: OCT. 2004 SCALE: N.T.S.
		DETAIL NO. WR-G_CP001

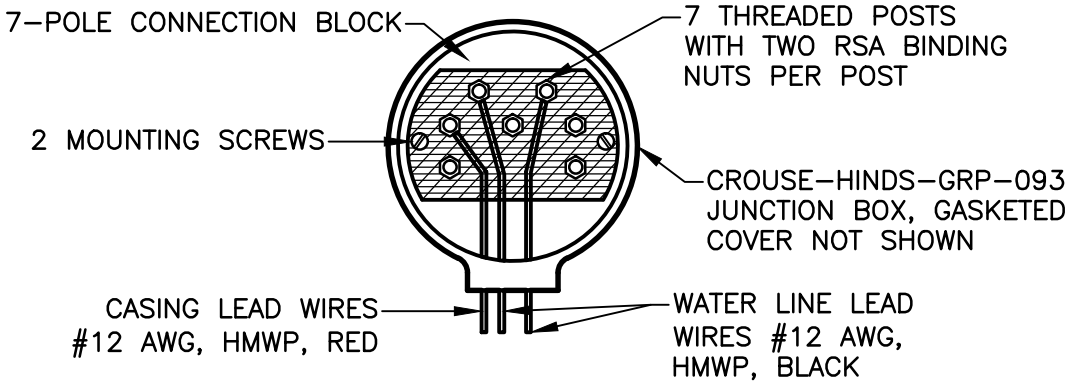

JUNCTION BOX DETAILS

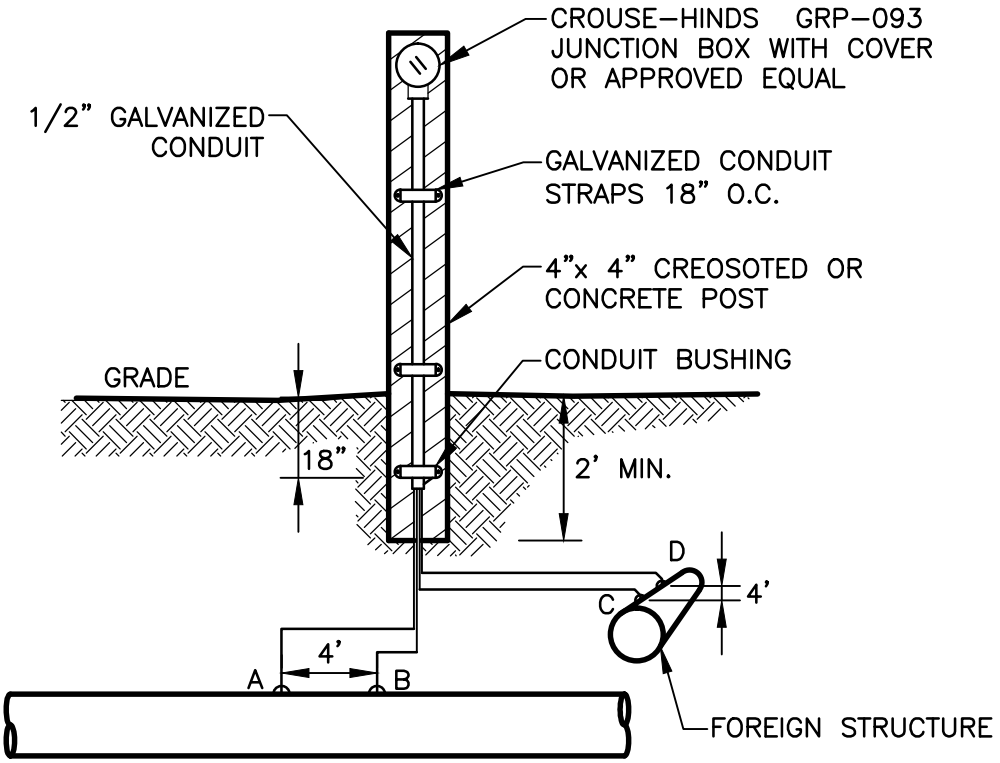

NOTES:

1. LEAD WIRE ATTACHED TO STRUCTURE BY CADWELDING OR EQUAL AND COATED WITH A COAL TAR COMPOUND.
2. IF POSSIBLE, 4"X4" POST MAY BE DELETED AND TEST BLOCK INSTALLED IN VALVE BOX.

WIRING KEY:

- WIRES A AND B ARE WHITE
- WIRE C AND D ARE BLUE
- WIRES B AND D ARE NO.12 AWG–THW
- WIRES A AND C ARE NO.6 AWG–THW,SINGLE CONDUCTOR WIRE.
- RESISTANCE WIRE (1 OHM PER FOOT) TO BE INSTALLED BETWEEN WIRES A AND C WHEN REQUIRED.

THIS DETAIL WAS TAKEN FROM THE CITY OF ATLANTA'S WEBSITE. IT MAY HAVE BEEN MODIFIED AND SHOULD BE REVIEWED THOROUGHLY.

City of Atlanta Department of Public Works	STANDARD DETAILS	DATE: OCT. 2011 ORIG. DATE: OCT. 2004 SCALE: N.T.S.
	TYPICAL CORROSION PROTECTION INTERFERENCE TEST LEADS	DETAIL NO. WR–G_CP002

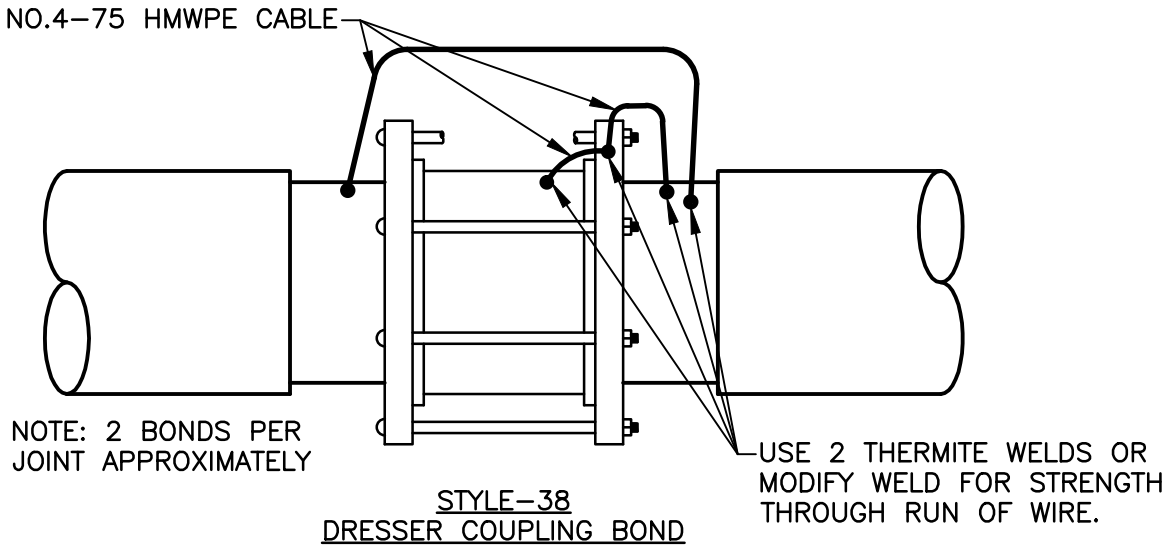

STYLE–38
DRESSER COUPLING BOND

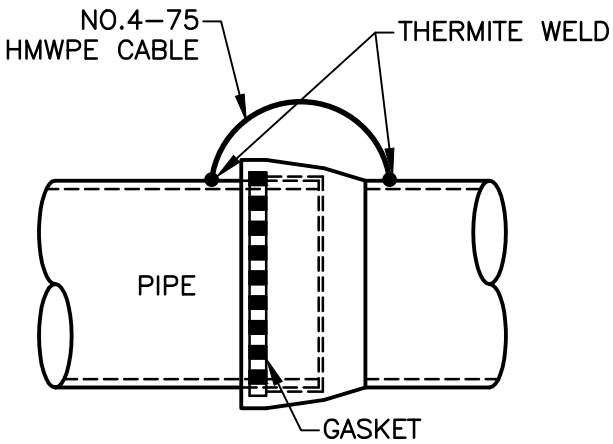

NOTE: 2 BONDS PER JOINT APPROXIMATELY

PUSH–ON JOINT BOND

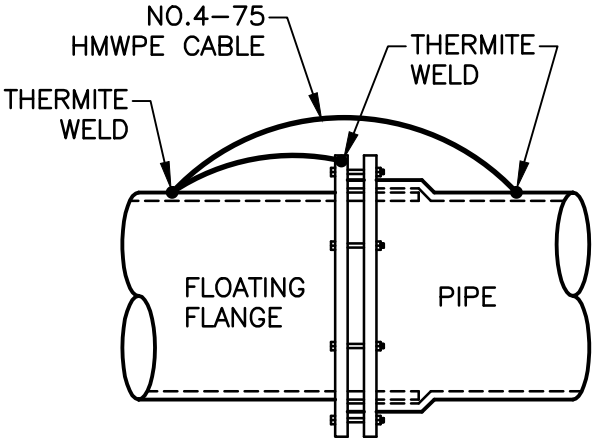

NOTE: 2 BONDS PER JOINT APPROXIMATELY

MECHANICAL JOINT BOND

NOTES:

1. ALL BARE METAL SHALL BE COATED WITH AN APPROVED PROTECTIVE COATING AND THOROUGHLY CHECKED FOR HOLIDAYS PRIOR TO BACKFILLING.
2. CARE SHALL BE TAKEN DURING BACKFILLING TO PREVENT ANY DAMAGE TO C.P. WIRES.

THIS DETAIL WAS TAKEN FROM THE CITY OF ATLANTA'S WEBSITE. IT MAY HAVE BEEN MODIFIED AND SHOULD BE REVIEWED THOROUGHLY.

City of Atlanta	STANDARD DETAILS	REV. DATE: OCT. 2011 ORIG. DATE: NOV. 2004 SCALE: N.T.S.
	TYPICAL CATHODIC PROTECTION BONDS	DETAIL NO. WR–G_CP003

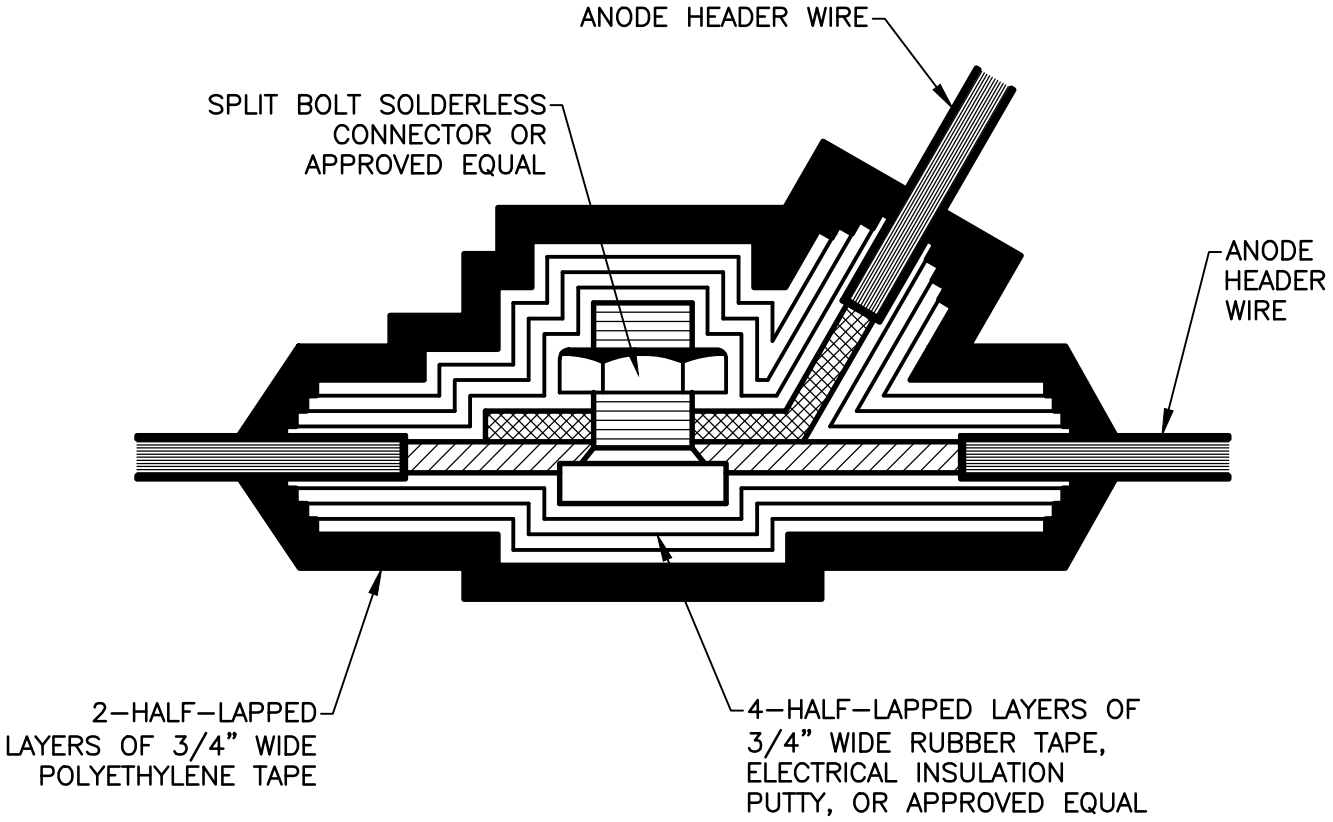

NOTE: ANOTHER APPROVED SPLICING METHOD IS THE HARCO "MINIHOT– SPLICE" OR EQUAL

THIS DETAIL WAS TAKEN FROM THE CITY OF ATLANTA'S WEBSITE. IT MAY HAVE BEEN MODIFIED AND SHOULD BE REVIEWED THOROUGHLY.

City of Atlanta	STANDARD DETAILS	REV. DATE: OCT. 2011 ORIG. DATE: NOV. 2004 SCALE: N.T.S.
	TYPICAL WATERPROOF ANODE CONNECTIONS	DETAIL NO. WR–G_CP004

STEP 1

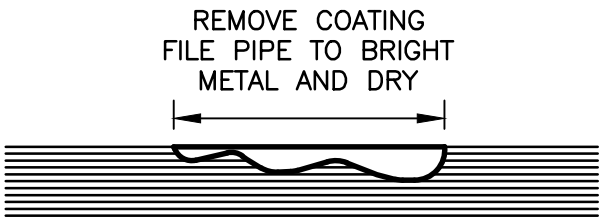

STEP 2

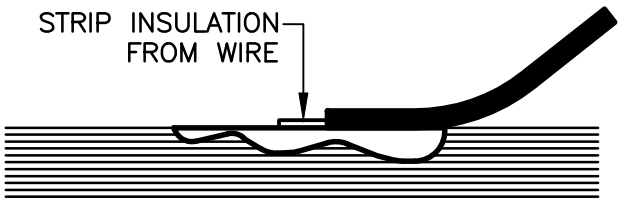

STEP 3

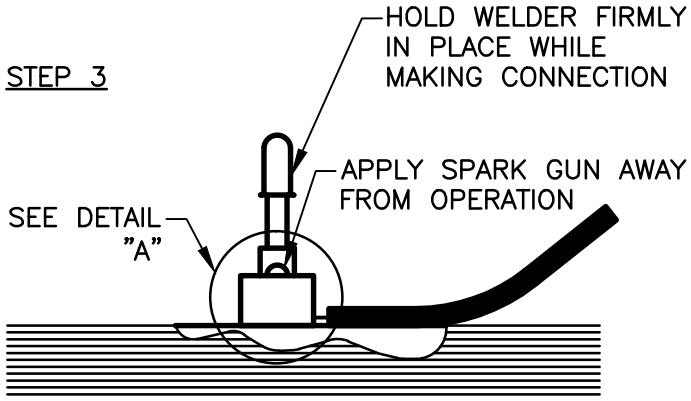

STEP 4

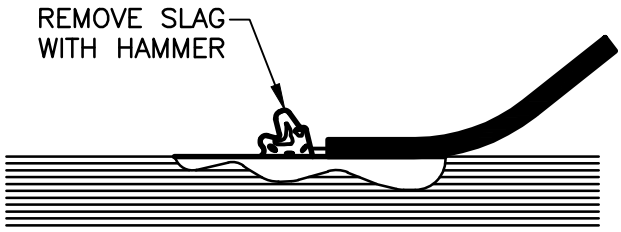

STEP 5

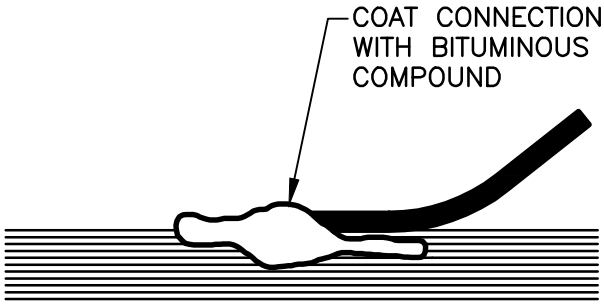

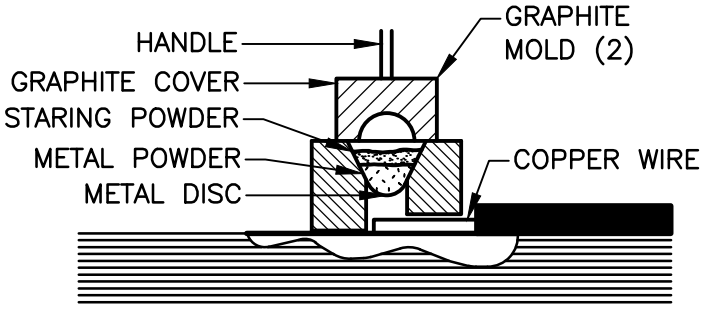

DETAIL "A"

NOTE:

1. WHEN NO.14 SOLID TO NO.10 SOLID WIRE IS USED, IT WILL BE NECESSARY TO INSTALL A COPPER SLEEVE OF ADEQUATE SIZE OVER BARE SECTION OF WIRE BEFORE CONNECTION IS ATTEMPTED.
2. CADWELL TYPE TB–3 WELDER OR APPROVED EQUAL.

THIS DETAIL WAS TAKEN FROM THE CITY OF ATLANTA'S WEBSITE. IT MAY HAVE BEEN MODIFIED AND SHOULD BE REVIEWED THOROUGHLY.

City of Atlanta	STANDARD DETAILS	REV. DATE: OCT. 2011 ORIG. DATE: NOV. 2004 SCALE: N.T.S.
	PROCEDURE FOR MAKING BRAZED CONNECTION	DETAIL NO. WR–G_CP005

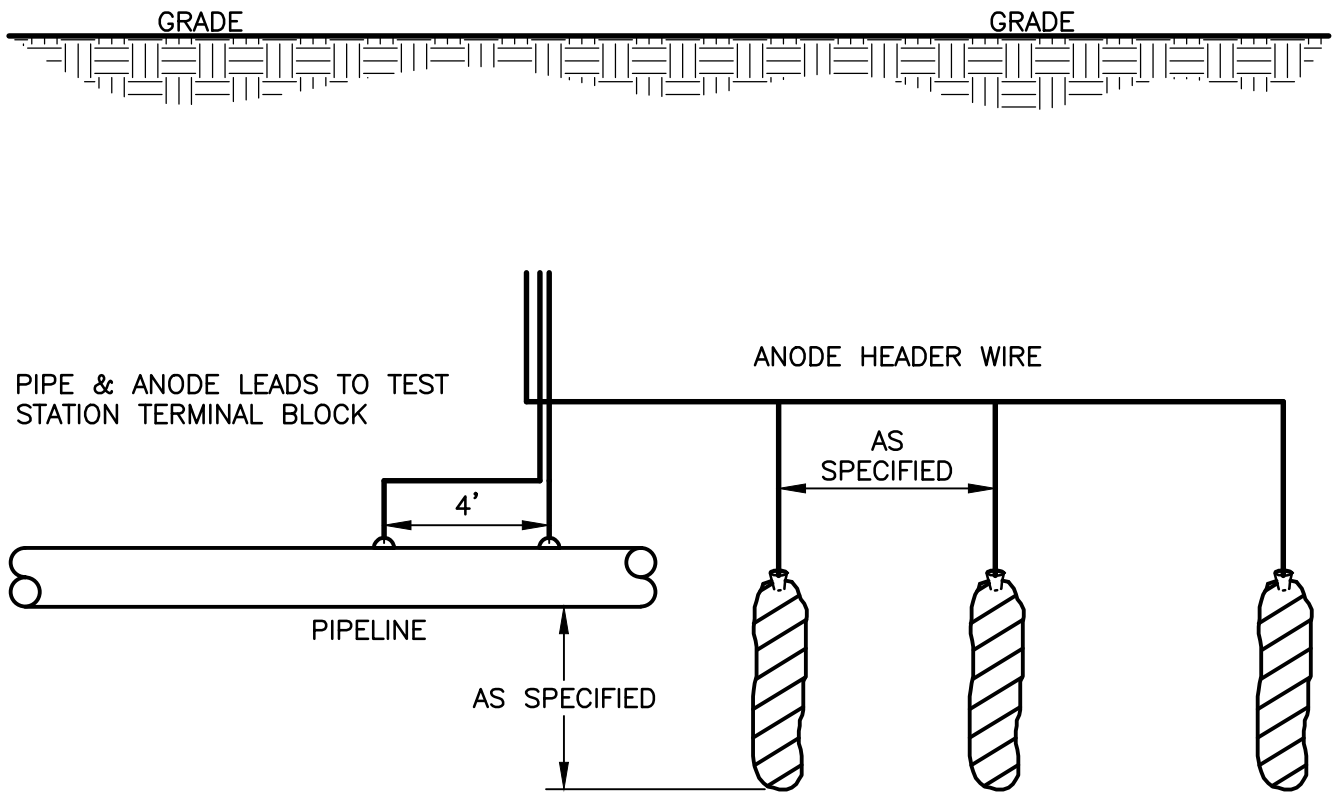

ANODES—SPACING & SIZE TO BE DETERMINED BY A QUALIFIED CORROSION ENGINEER IN ACCORDANCE WITH NACE STANDARDS.

NOTES:

1. ANODE HEADER WIRE TO BE A MINIMUM 8 AWG, COPPER, SINGLE CONDUCTOR, HMWPE, SPECIFICALLY DESIGNED FOR CATHODIC PROTECTION SERVICE, COLOR WHITE.
2. ALL ANODE HEADER WIRES TO BE "LOOPED". ALL SPLICES TO BE WATERPROOF AND MADE IN ACCORDANCE.

THIS DETAIL WAS TAKEN FROM THE CITY OF ATLANTA'S WEBSITE. IT MAY HAVE BEEN MODIFIED AND SHOULD BE REVIEWED THOROUGHLY.

City of Atlanta	STANDARD DETAILS	REV. DATE: OCT. 2011 ORIG. DATE: OCT. 2004 SCALE: N.T.S.
	TYPICAL MAGNESIUM ANODE INSTALLATION	DETAIL NO. WR-G_CP006

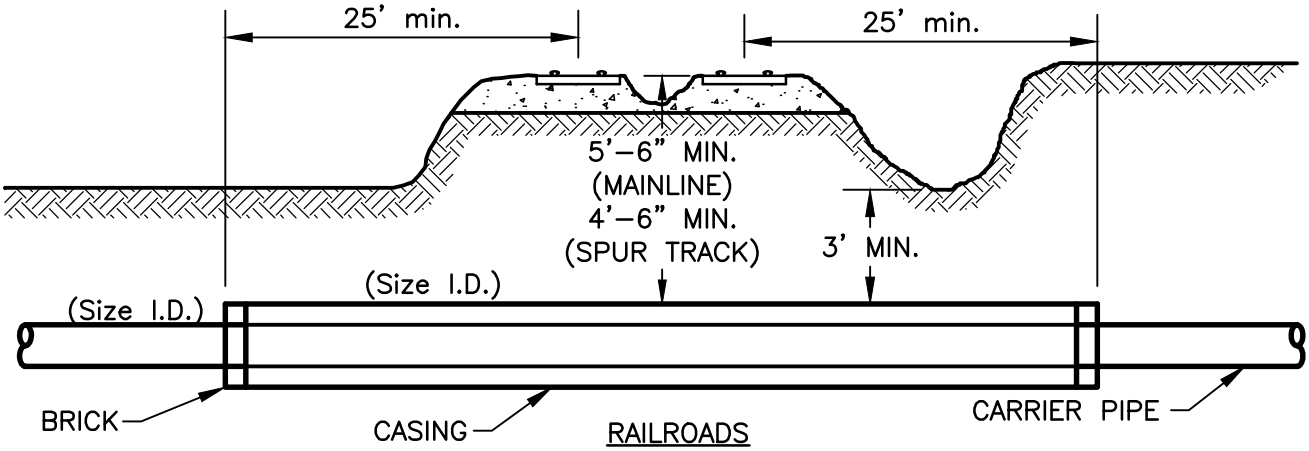

RAILROADS

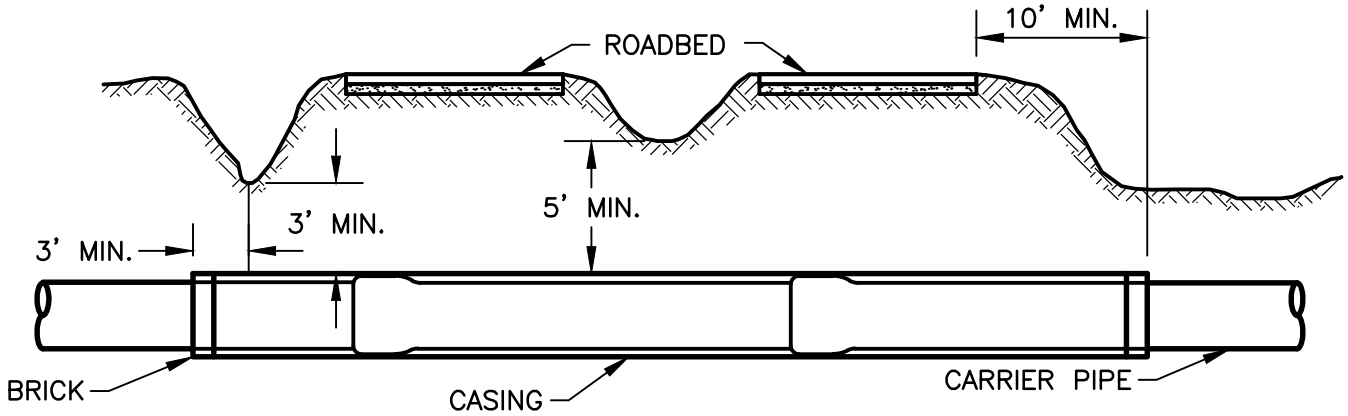

FREEWAYS

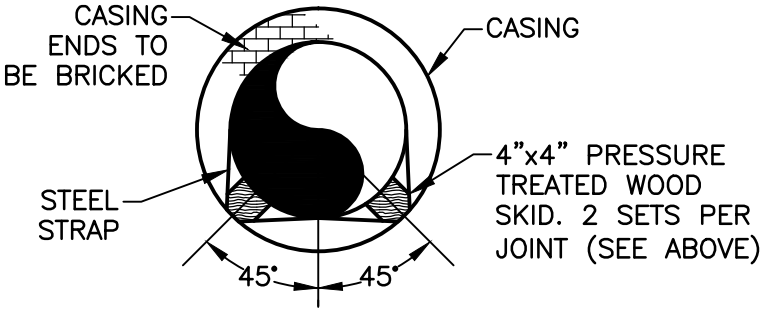

CASING–END VIEW
PIPE ACCESSIBLE

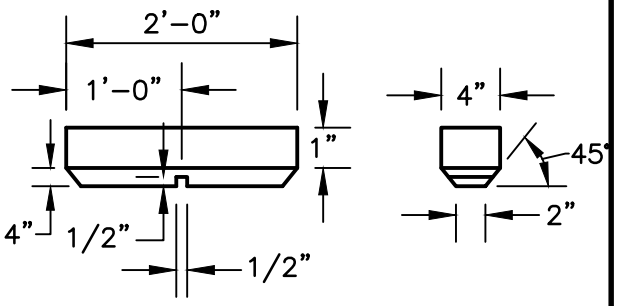

WOOD SKID DETAIL

BORED CASINGS			
PIPE SIZE	PIPE O.D.	CASING SIZE	CASING I.D.
6"	6.90"	12"	11.376"
8"	9.05"	16"	14.314"
12"	13.20"	20"	17.938"
16"	17.40"	24"	21.564"
20	21.60"	28"	27.0"
24"	25.80"	36"	35.0"

NOTE:
IF CASING UNDER RAILROAD IS NOT COATED OR CATHODIC– ALLY PROTECTED, INCREASE THICKNESS .062"

THIS DETAIL WAS TAKEN FROM THE CITY OF ATLANTA'S WEBSITE. IT MAY HAVE BEEN MODIFIED AND SHOULD BE REVIEWED THOROUGHLY.

City of Atlanta

STANDARD DETAILS

TYPICAL RAILROAD OR FREEWAY CROSSING

REV.
DATE: OCT. 2011
ORIG. DATE: OCT. 2004
SCALE: N.T.S.

DETAIL NO. WR–G_CR001

MAXIMUM PERMISSIBLE DEFLECTIONS

SIZE (NOM)	PUSH-ON-JOINT (18 FT. JOINTS) (20 FT. JOINTS)		MECHANICAL JOINT (18 FT. JOINTS) (20 FT. JOINTS)	
	DEGREE	MAX. OFFSET	DEGREE	MAX. OFFSET
3"	4.0	15"	4.5	17"
4"	4.0	15"	4.5	17"
6"	4.0	15"	4.5	17"
8"	4.0	15"	4.5	17"
10"	4.0	15"	4.5	17"
12"	4.0	15"	4.5	17"
14"	2.5	9.4"	3.0	11"
16"	2.0	7.5"	3.0	11"
20"	2.0	7.5"	2.0	7.5"
24"	2.0	7.5"	2.0	7.5"
30"	1.5	5.5"	2.0	7.5"
36"	1.5	5.5"	2.0	7.5"
42"	1.5	5.5"	1.5	5.5"
48"	1.5	5.5"	1.5	5.5"

NOTES:

1. WHEN A PIPE IS DEFLECTED, THE PIPE SHALL FIRST BE ASSEMBLED IN A STRAIGHT LINE, BOTH HORIZONALLY AND VERTICALLY BEFORE THE DEFLECTION IS MADE.

2. FOR MECHANICAL JOINT PIPE, THE BOLTS SHALL BE PARTIALLY TIGHTENED BEFORE THE LENGTH OF PIPE IS DEFLECTED. ANY SUPPORTED PIPE, SHALL BE SO SUPPORTED THAT THERE IS ZERO DEFLECTION EXCEPT WHERE EITHER A HORIZONAL OR VERTICAL CURVE ON A BRIDGE OR OTHER STRUCTURE IS INVOLVED.

3. THRUST RESTRAINTS MAY BE REQUIRED ON THE DEFLECTED JOINTS.

THIS DETAIL WAS TAKEN FROM THE CITY OF ATLANTA'S WEBSITE. IT MAY HAVE BEEN MODIFIED AND SHOULD BE REVIEWED THOROUGHLY.

City of Atlanta

STANDARD DETAILS

MAXIMUM PERMISSIBLE JOINT DEFLECTIONS

REV.
DATE: OCT. 2011
ORIG. DATE: NOV. 2004
SCALE: N.T.S.

DETAIL NO. WR-G_DF001

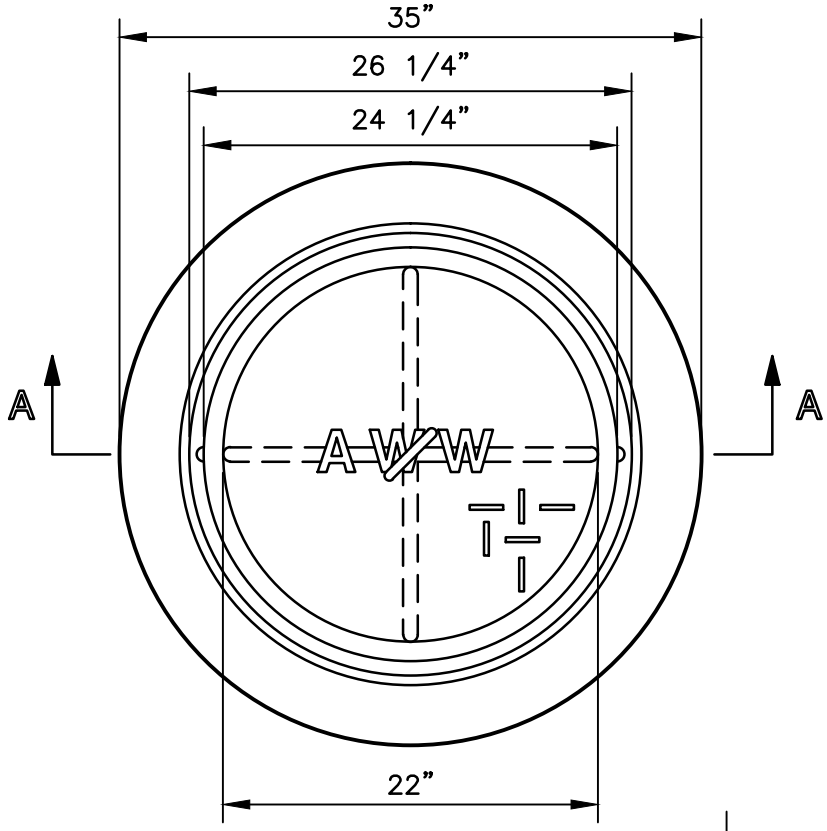

PLAN

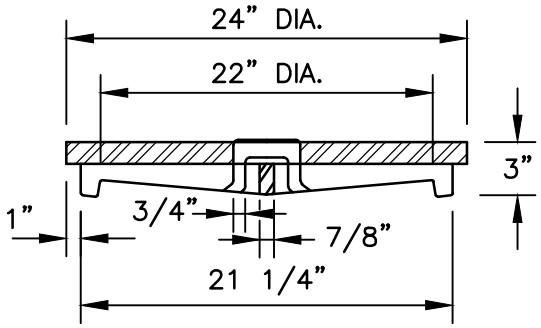

SECTION A–COVER

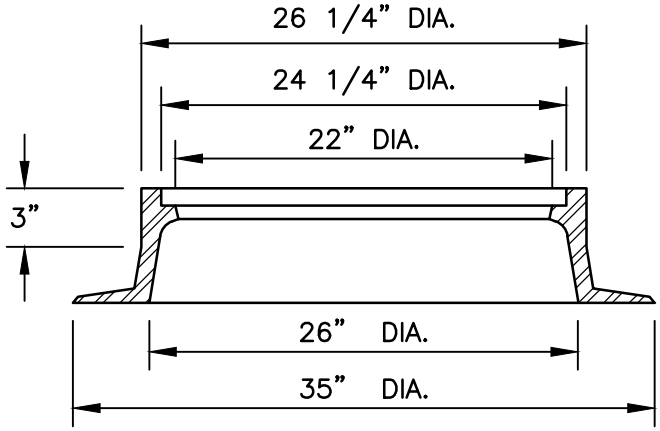

SECTION A–FRAME

NOTES:

1. UNLESS NOTED OTHERWISE, CAST IRON SHALL CONFORM TO A.S.T.M. SPECIFICATIONS A48 LATEST REVISION FOR CLASS 20 GREY IRON CASTING.
2. CASTING SHALL BE TRUE AND FREE OF HOLES. THEY SHALL BE CLEANED ACCORDING TO GOOD FOUNDRY PRACTICE, CHIPPED AS NEEDED TO REMOVE FINS AND ROUGH PLACES.
3. FINISHED CASTINGS SHALL BE COATED INSIDE AND OUTSIDE WITH COAL TAR PITCH VARNISH AS INDICATED IN A.W.W.A. SPECIFICATIONS LATEST REVISION. COATING MAYBE APPLIED COLD AND SHALL BE SMOOTH, GLOSSY. NOT BRITTLE WHEN COLD, NOT STICKY WHEN EXPOSED TO THE SUN, AND SHALL ADHERE TO THE METAL AT ALL TEMPERATURES.
4. WHEN COATING IS COMPLETE, LID SHALL FIT SNUGLY WITHOUT ROCKING.

THIS DETAIL WAS TAKEN FROM THE CITY OF ATLANTA'S WEBSITE. IT MAY HAVE BEEN MODIFIED AND SHOULD BE REVIEWED THOROUGHLY.

City of Atlanta	STANDARD DETAILS	REV. DATE: OCT. 2011 ORIG. DATE: OCT. 2004 SCALE: N.T.S.
	TYPICAL MANHOLE FRAME AND COVER ASSEMBLY	DETAIL NO. WR–G_FC004

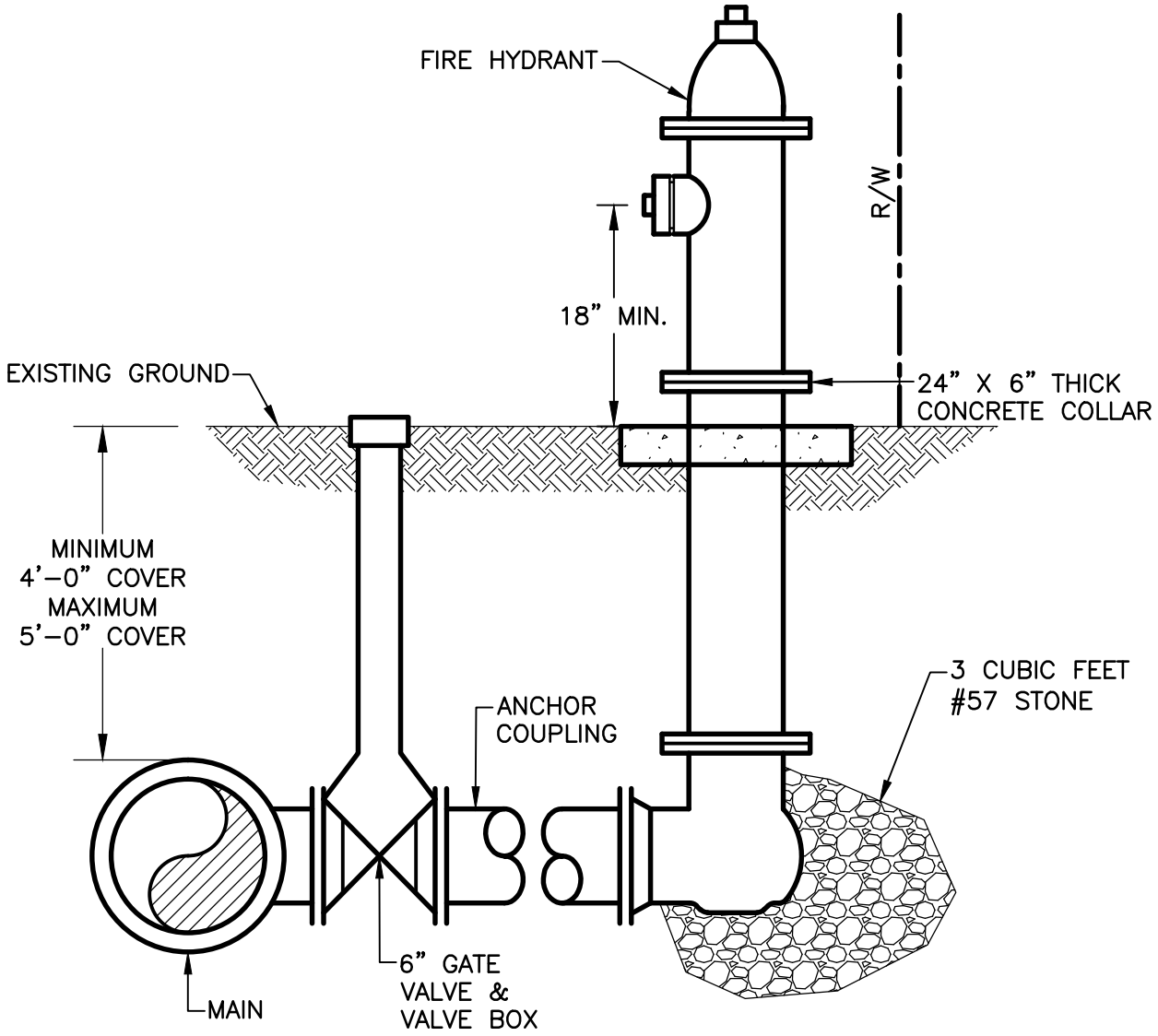

NOTES:

1. HYDRANT CONNECTOR MAY BE USED IN LIEU OF ANCHOR COUPLING.
2. HYDRANT DEPTH OF BURY SHALL MATCH MFGR.'S BURY LINE.
3. HYDRANTS SHALL BE LOCATED:
   - ONE FOOT BEHIND SIDEWALK, OR
   - IF NO SIDEWALK, 6 FEET BEHIND CURB, OR
   - IF NO SIDEWALK OR CURB, ONE FOOT INSIDE OF R/W.
4. WHERE ANCHOR COUPLING IS 4 FEET LONG, PROVIDE DIP W/RET. GLD. OR TWO 3/4" RODS.

THIS DETAIL WAS TAKEN FROM THE CITY OF ATLANTA'S WEBSITE. IT MAY HAVE BEEN MODIFIED AND SHOULD BE REVIEWED THOROUGHLY.

City of Atlanta	STANDARD DETAILS	REV. DATE: OCT. 2011 ORIG. DATE: OCT. 2004 SCALE: N.T.S.
	TYPICAL FIRE HYDRANT	DETAIL NO. WR-G_FH001

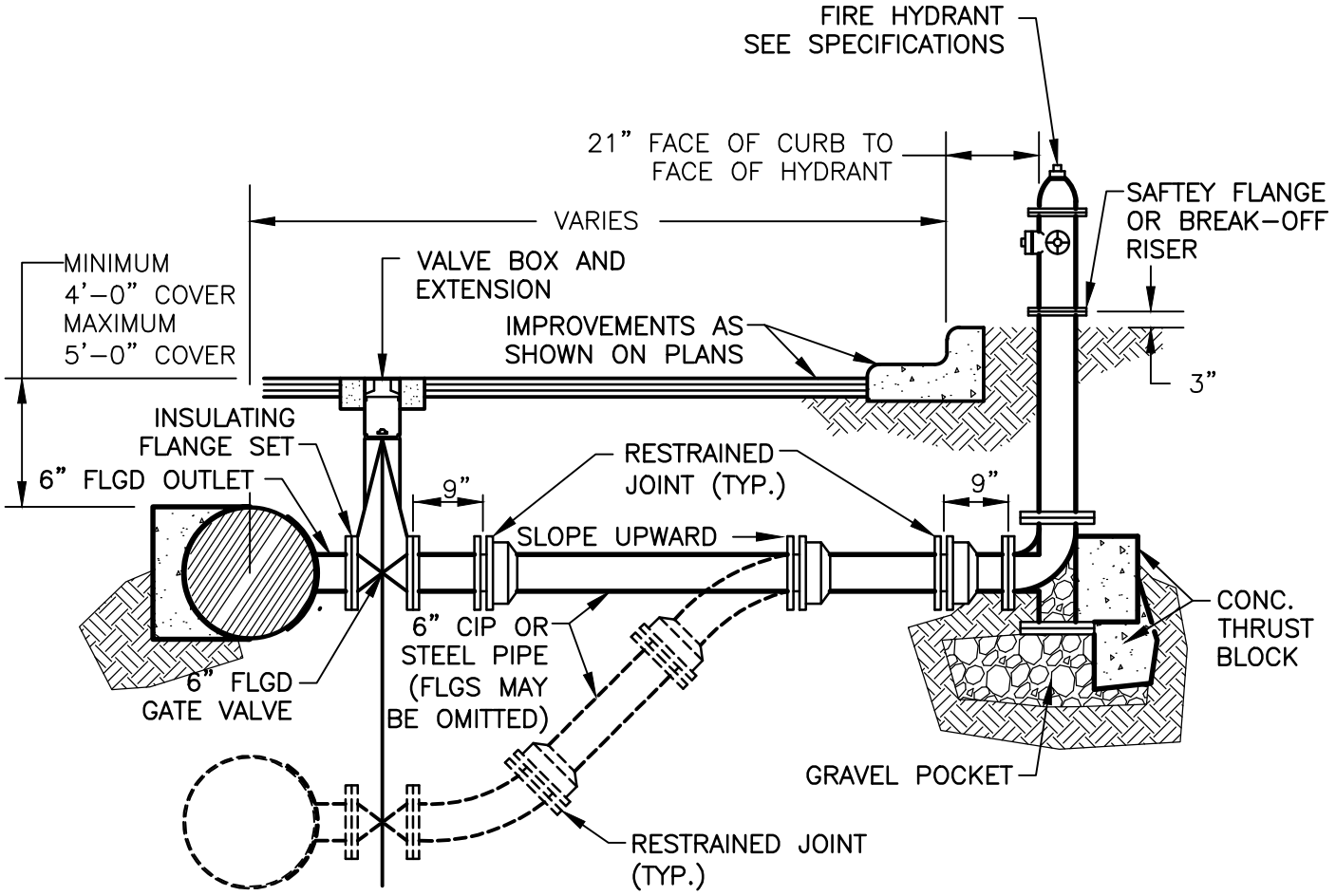

TYPE "A" FIRE HYDRANT (FH) LATERAL

NOTES:

1. ALL FERROUS SURFACES OF PIPE AND APPURTENANCES TO BE PROVIDED WITH PROTECTIVE COATINGS PER SPECS.
2. PROVIDE STAINLESS STEEL NUTS, BOLTS AND WASHERS TO BURIED FLANGES AND COUPLINGS, EXCEPT FOR NON-METALLIC WASHERS TO BE PROVIDED AS PART OF INSULATING FLANGE SET.

THIS DETAIL WAS TAKEN FROM THE CITY OF ATLANTA'S WEBSITE. IT MAY HAVE BEEN MODIFIED AND SHOULD BE REVIEWED THOROUGHLY.

City of Atlanta	STANDARD DETAILS	REV. DATE: OCT. 2011 ORIG. DATE: NOV. 2004 SCALE: N.T.S.
	TYPE "A" TYPICAL FIRE HYDRANT	DETAIL NO. WR-G_FH002

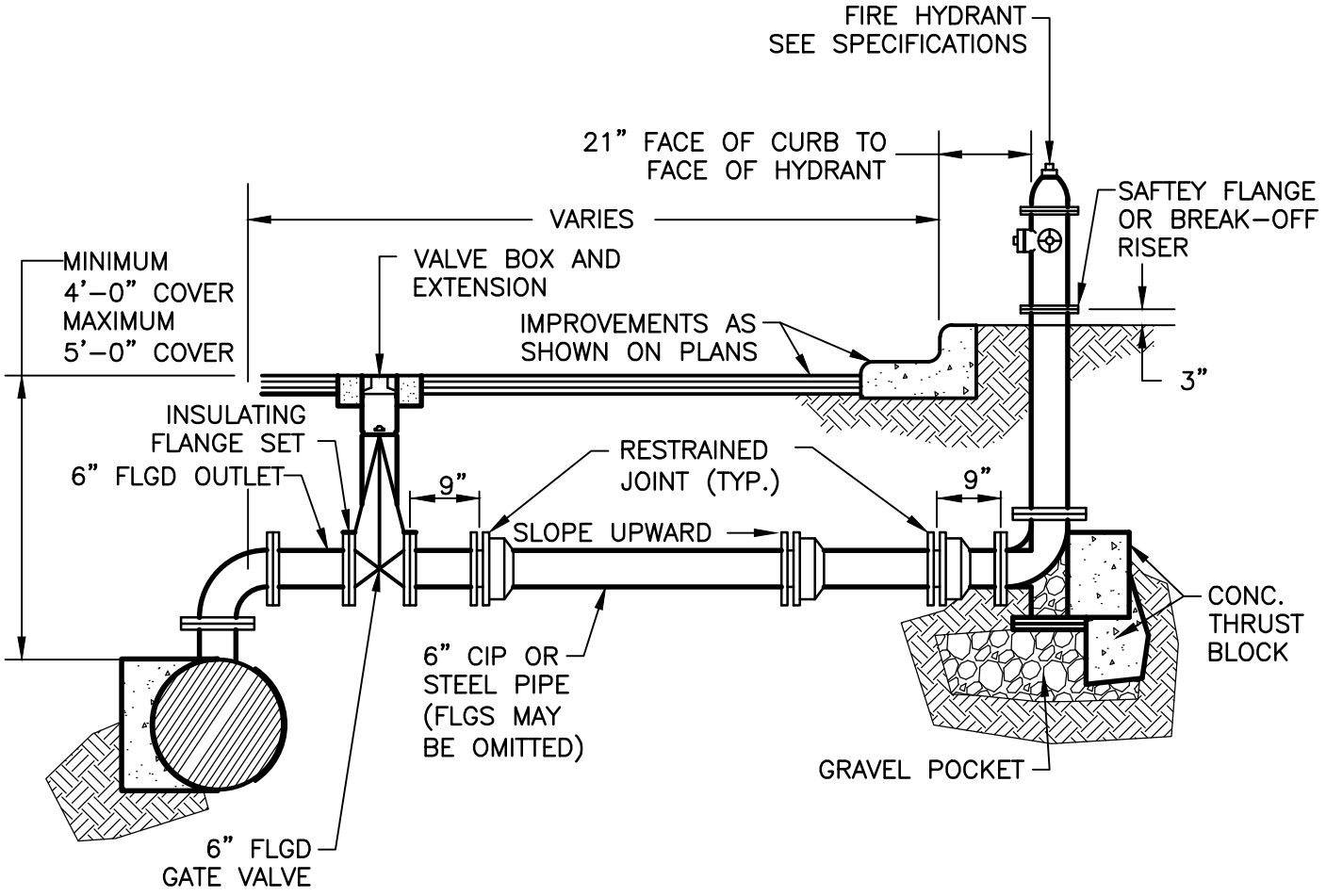

TYPE "B" FIRE HYDRANT (FH) LATERAL

NOTES:

1. ALL FERROUS SURFACES OF PIPE AND APPURTENANCES TO BE PROVIDED WITH COATINGS PER SPECS.
2. PROVIDE STAINLESS STEEL NUTS, BOLTS AND WASHERS TO BURIED FLANGES AND COUPLINGS, EXCEPT FOR NON-METALLIC WASHERS TO BE PROVIDED AS PART OF INSULATING FLANGE SET.

THIS DETAIL WAS TAKEN FROM THE CITY OF ATLANTA'S WEBSITE. IT MAY HAVE BEEN MODIFIED AND SHOULD BE REVIEWED THOROUGHLY.

City of Atlanta	STANDARD DETAILS	REV. DATE: OCT. 2011 ORIG. DATE: NOV. 2004 SCALE: N.T.S.
	TYPE "B" TYPICAL FIRE HYDRANT	DETAIL NO. WR-G_FH003

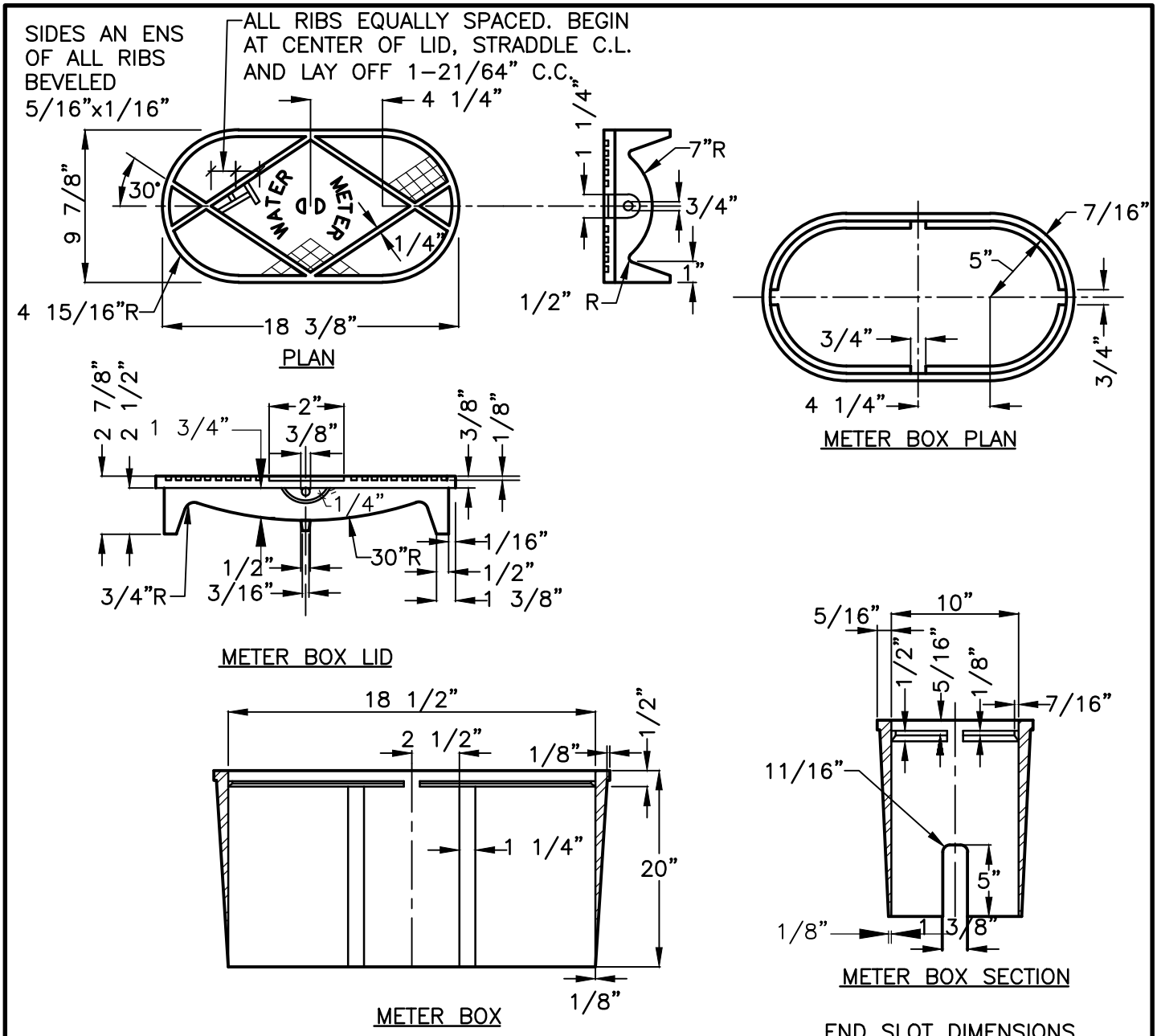

END SLOT DIMENSIONS
ATLANTA ONLY ALL OTHERS
4 3/4" x 2 1/2"

GENERAL NOTES:

1. UNLESS NOTED OTHERWISE, CAST IRON SHALL CONFORM TO A.S.T.M. SPECIFICATIONS A48 LATEST REVISION FOR CLASS 20 GREY IRON CASTINGS.
2. CASTINGS SHALL BE TRUE AND FREE OF HOLES. THEY SHALL BE CLEANED ACCORDING TO GOOD FOUNDRY PRACTICE, CHIPPED AND GROUND AS NEEDED TO REMOVE FINS AND ROUGH PLACES.
3. FINISHED CASTINGS SHALL BE COATED INSIDE AND OUTSIDE WITH COAL TAR PITCH VARNISH AS INDICATED IN A.W.W.A. SPECIFICATIONS C110, LATEST REVISION. COATING MAY BE APPLIED COLD AND SHALL BE SMOOTH, GLOSSY, NOT BRITTLE WHEN COLD, NOT STICKY WHEN EXPOSED TO THE SUN, AND SHALL ADHERE TO THE METAL AT ALL TEMPERATURES.
4. WHEN COATING IS COMPLETE, LID SHALL FIT SNUGLY WITHOUT ROCKING.

THIS DETAIL WAS TAKEN FROM THE CITY OF ATLANTA'S WEBSITE. IT MAY HAVE BEEN MODIFIED AND SHOULD BE REVIEWED THOROUGHLY.

City of Atlanta Department of Public Works	STANDARD DETAILS	DATE: OCT. 2011 ORIG. DATE: OCT. 2004 SCALE: N.T.S.
	TYPICAL METER BOX ASSEMBLY	DETAIL NO. WR-G_ME001

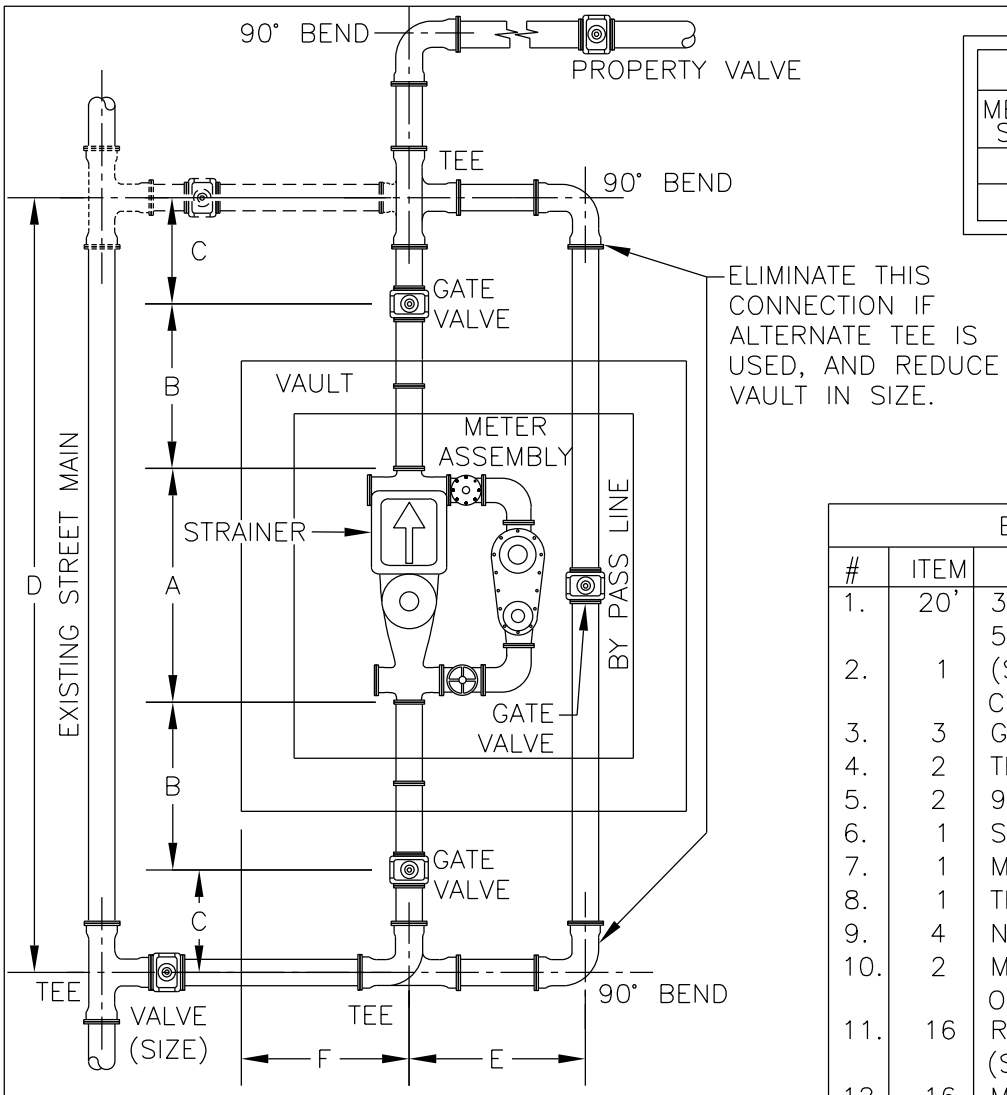

PLAN

DIMENSIONS IN (INCHES)						
METER SIZE	A	B	C	D	E	F
6"	45	25	25	145	38	32
8"	53	25?	29	162	45	34

BILL OF MATERIALS		
#	ITEM	DESCRIPTION
1.	20'	3" D.I.P. (SHORT SIDE)
		50' 3" D.I.P. (LONG SIDE)
2.	1	(SIZE OF MAIN) T.S.&V. (OR CUT-IN-VALVE)
3.	3	GATE VALVES
4.	2	TEES (SIZE OF METER)
5.	2	90° BEND (SIZE OF METER)
6.	1	STRAINER (SIZE OF METER)
7.	1	METER (SIZE OF METER)
8.	1	TEST PORT (SIZE OF METER)
9.	4	NIPPLES (SIZE OF METER)
10.	2	METERS COUPLINGS (SIZE OF METER)
11.	16	RING BOLTS & GASKET (SIZE OF METER)
12.	16	MEGALOCKS (SIZE OF METER)

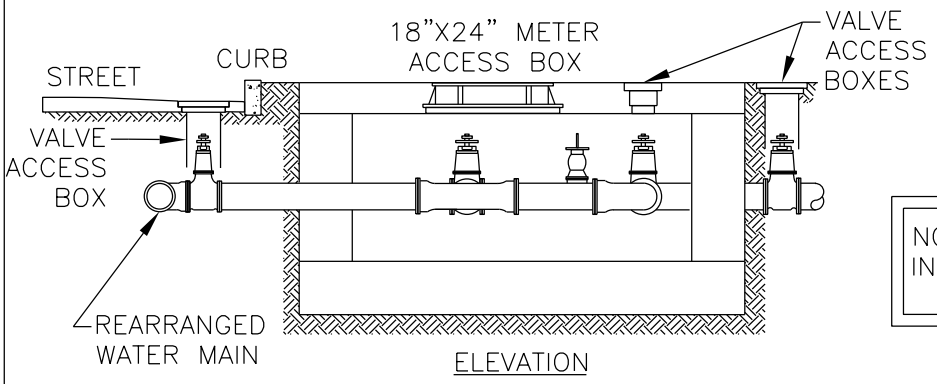

ELEVATION

NOTE: THIS DRAWING FOR DESIGN INFORMATION ONLY UWSA FORCES WILL INSTALL ALL METERS.

NOTE:

1. SAME DIMENSIONS USED FOR 3", 4", 6", 8", 10" & 12" PIPES
2. FOR INSUFFICIENT AREA IN SIDEWALK, BY-PASS MAY BE PROVIDED IN THIS MANNER. (VALVE TO BE LOCKED CLOSED)

THIS DETAIL WAS TAKEN FROM THE CITY OF ATLANTA'S WEBSITE. IT MAY HAVE BEEN MODIFIED AND SHOULD BE REVIEWED THOROUGHLY.

City of Atlanta
Department of Public Works

STANDARD DETAILS

TYPICAL F.M. METER INSTALLATION

DATE: OCT. 2011
ORIG. DATE: NOV. 2004
SCALE: N.T.S.

DETAIL NO. WR-G_ME002

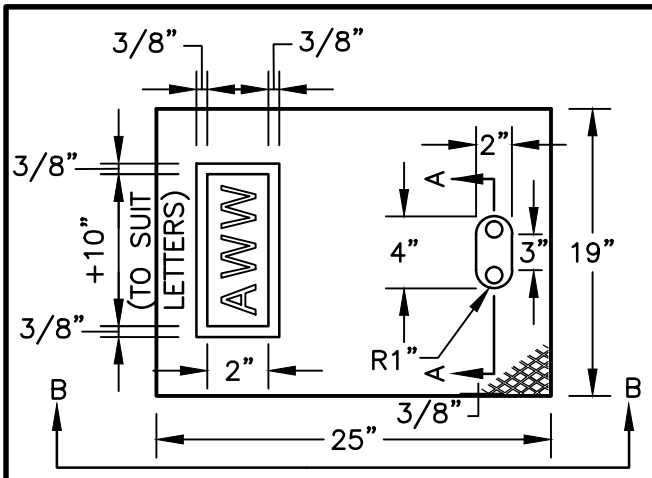

TOP VIEW

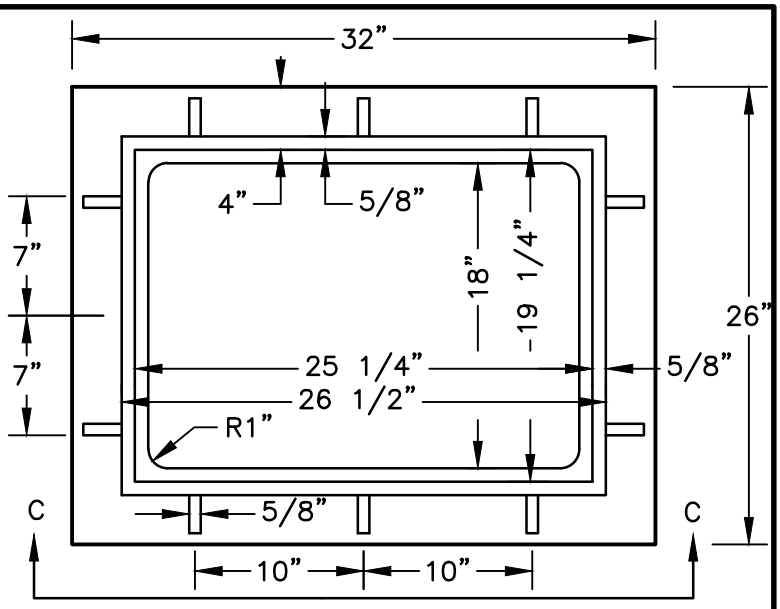

PLAN

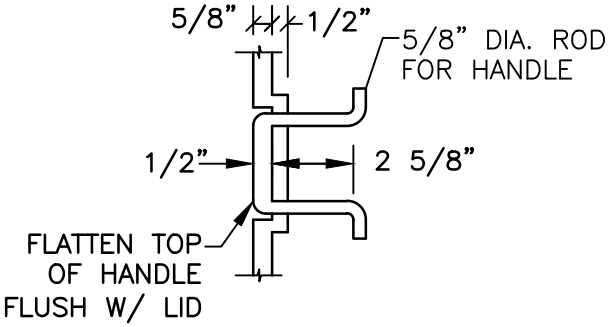

SECTION–A

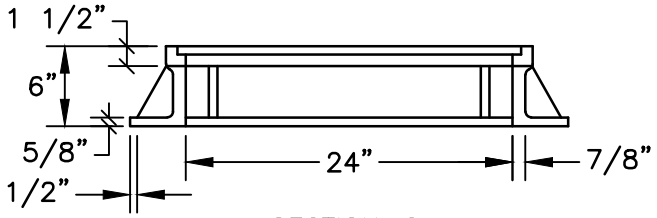

SECTION–C

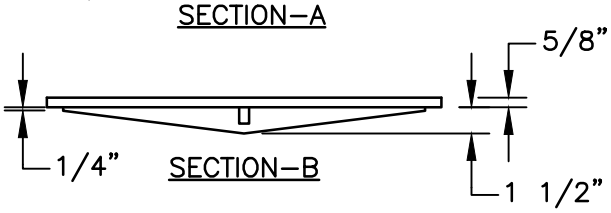

SECTION–B

METER BOX LID–SIDEWALK TYPE
DETAIL–2

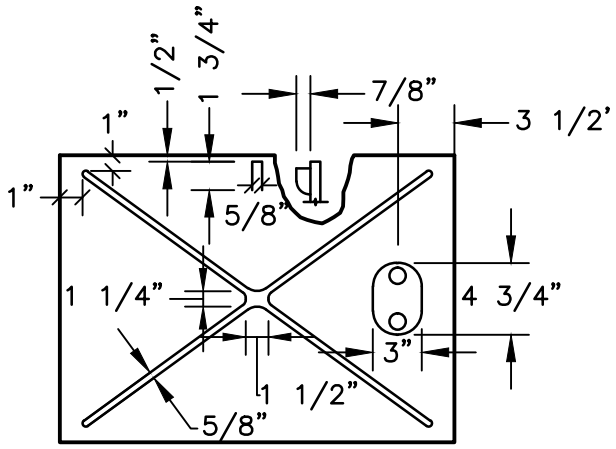

BOTTOM VIEW

METER BOX LID–SIDEWALK TYPE
DETAIL–1

GENERAL NOTES:

1. UNLESS NOTED OTHERWISE, CAST IRON SHALL CONFORM TO A.S.T.M. SPECIFICATIONS A48 LATEST REVISION FOR CLASS 20 GREY IRON CASTINGS.
2. CASTINGS SHALL BE TRUE AND FREE OF HOLES. THEY SHALL BE CLEANED ACCORDING TO GOOD FOUNDRY PRACTICE, CHIPPED AND GROUND AS NEEDED TO REMOVE FINS AND ROUGH PLACES.
3. FINISHED CASTINGS SHALL BE COATED INSIDE AND OUTSIDE WITH COAL TAR PITCH VARNISH AS INDICATED IN A.W.W.A. SPECIFICATIONS C110, LATEST REVISION. COATING MAY BE APPLIED COLD AND SHALL BE SMOOTH, GLOSSY, NOT BRITTLE WHEN COLD, NOT STICKY WHEN EXPOSED TO THE SUN, AND SHALL ADHERE TO THE METAL AT ALL TEMPERATURES.
4. WHEN COATING IS COMPLETE, LID SHALL FIT SNUGLY WITHOUT ROCKING.

THIS DETAIL WAS TAKEN FROM THE CITY OF ATLANTA'S WEBSITE. IT MAY HAVE BEEN MODIFIED AND SHOULD BE REVIEWED THOROUGHLY.

City of Atlanta	STANDARD DETAILS	REV. DATE: OCT. 2011 ORIG. DATE: NOV. 2004 SCALE: N.T.S.
	TYPICAL METER BOX LID AND FRAME TRAFFIC TYPE	DETAIL NO. WR–G_ME003

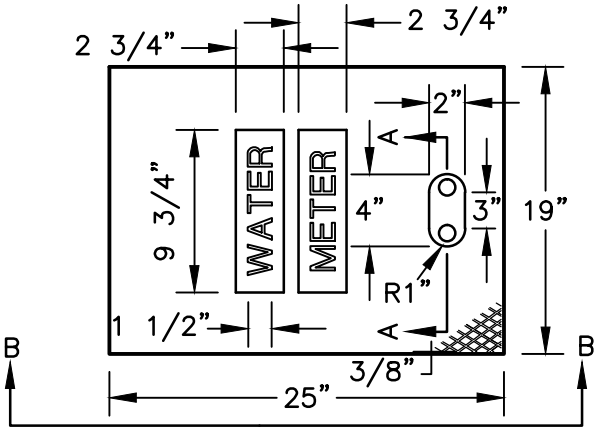

TOP VIEW

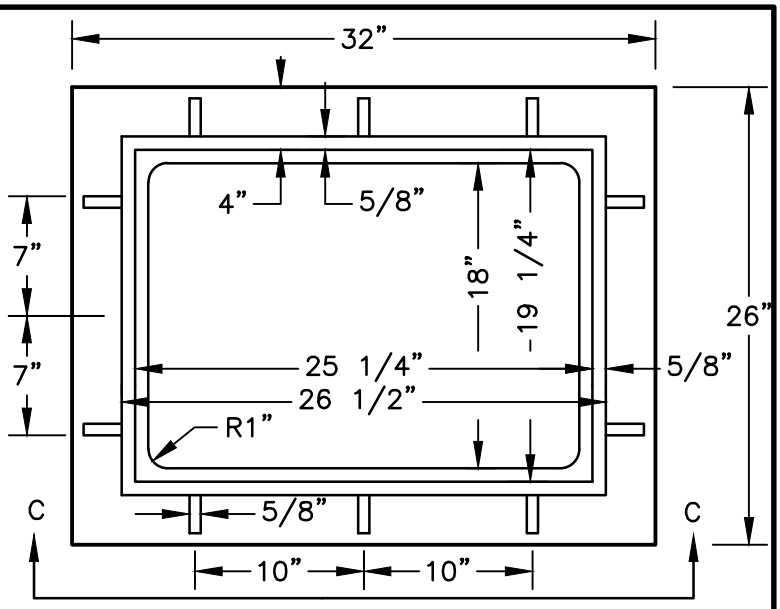

PLAN

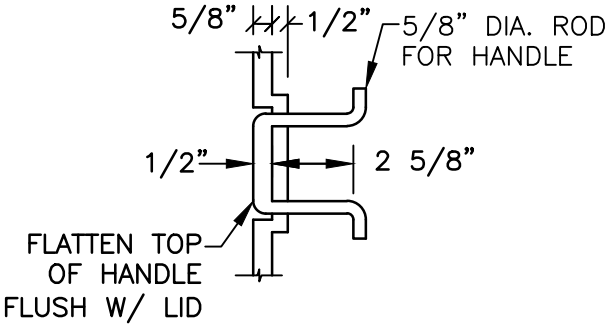

SECTION–A

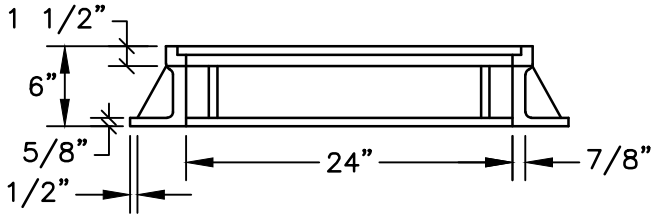

SECTION–C

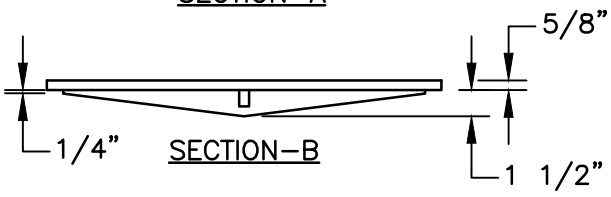

SECTION–B

METER BOX LID–SIDEWALK TYPE
DETAIL–2

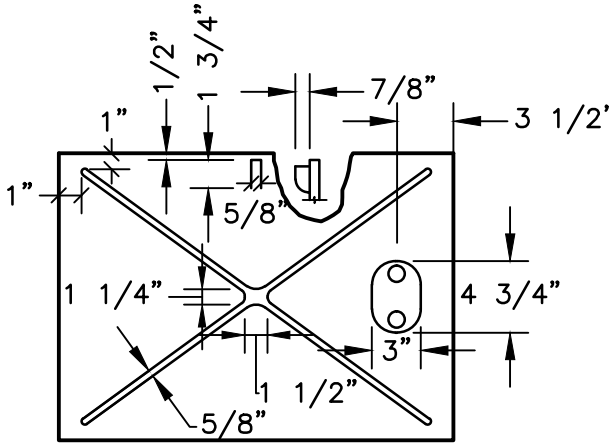

BOTTOM VIEW

METER BOX LID–SIDEWALK TYPE
DETAIL–1

GENERAL NOTES:

1. UNLESS NOTED OTHERWISE, CAST IRON SHALL CONFORM TO A.S.T.M. SPECIFICATIONS A48 LATEST REVISION FOR CLASS 20 GREY IRON CASTINGS.
2. CASTINGS SHALL BE TRUE AND FREE OF HOLES. THEY SHALL BE CLEANED ACCORDING TO GOOD FOUNDRY PRACTICE, CHIPPED AND GROUND AS NEEDED TO REMOVE FINS AND ROUGH PLACES.
3. FINISHED CASTINGS SHALL BE COATED INSIDE AND OUTSIDE WITH COAL TAR PITCH VARNISH AS INDICATED IN A.W.W.A. SPECIFICATIONS C110, LATEST REVISION. COATING MAY BE APPLIED COLD AND SHALL BE SMOOTH, GLOSSY, NOT BRITTLE WHEN COLD, NOT STICKY WHEN EXPOSED TO THE SUN, AND SHALL ADHERE TO THE METAL AT ALL TEMPERATURES.
4. WHEN COATING IS COMPLETE, LID SHALL FIT SNUGLY WITHOUT ROCKING.

THIS DETAIL WAS TAKEN FROM THE CITY OF ATLANTA'S WEBSITE. IT MAY HAVE BEEN MODIFIED AND SHOULD BE REVIEWED THOROUGHLY.

City of Atlanta	STANDARD DETAILS	REV. DATE: OCT. 2011 ORIG. DATE: NOV. 2004 SCALE: N.T.S.
	TYPICAL METER BOX LID AND FRAME SIDEWALK TYPE	DETAIL NO. WR–G_ME004

NOM. PIPE DIA.	BELL DEPTH	BOLTS				JOINTS ACCESSORY WEIGHT-Lbs.
		DIAMETER	LENGTH	NUMBER PER JOINT	REC.TORQUE FT.-Lbs.	
4	2"	3/4"	3"	4	75-90	10
6	2"	3/4"	3"	6	75-90	16
8	2"	3/4"	4"	6	75-90	25
10	2"	3/4"	4"	8	75-90	30
12	2"	3/4"	4"	8	75-90	40
14	3 1/2"	3/4"	4"	10	75-90	45
16	3 1/2"	3/4"	4"	12	75-90	55
18	3 1/2"	3/4"	4?"	12	75-90	65
20	3 1/2"	3/4"	4"	14	75-90	85
24	3 1/2"	3/4"	5"	16	75-90	105
30	4"	1"	6"	20	100-120	220
36	4"	1"	6"	24	100-120	285
42	4"	1 1/4"	6"	28	120-150.	400
48	4"	1 1/4"	6"	32	120-150.	475

THIS DETAIL WAS TAKEN FROM THE CITY OF ATLANTA'S WEBSITE. IT MAY HAVE BEEN MODIFIED AND SHOULD BE REVIEWED THOROUGHLY.

City of Atlanta

STANDARD DETAILS

MECHANICAL JOINT BOLT USAGE CHART

REV.
DATE: OCT. 2011
ORIG. DATE: NOV. 2004
SCALE: N.T.S.

DETAIL NO. WR-G_MJ002

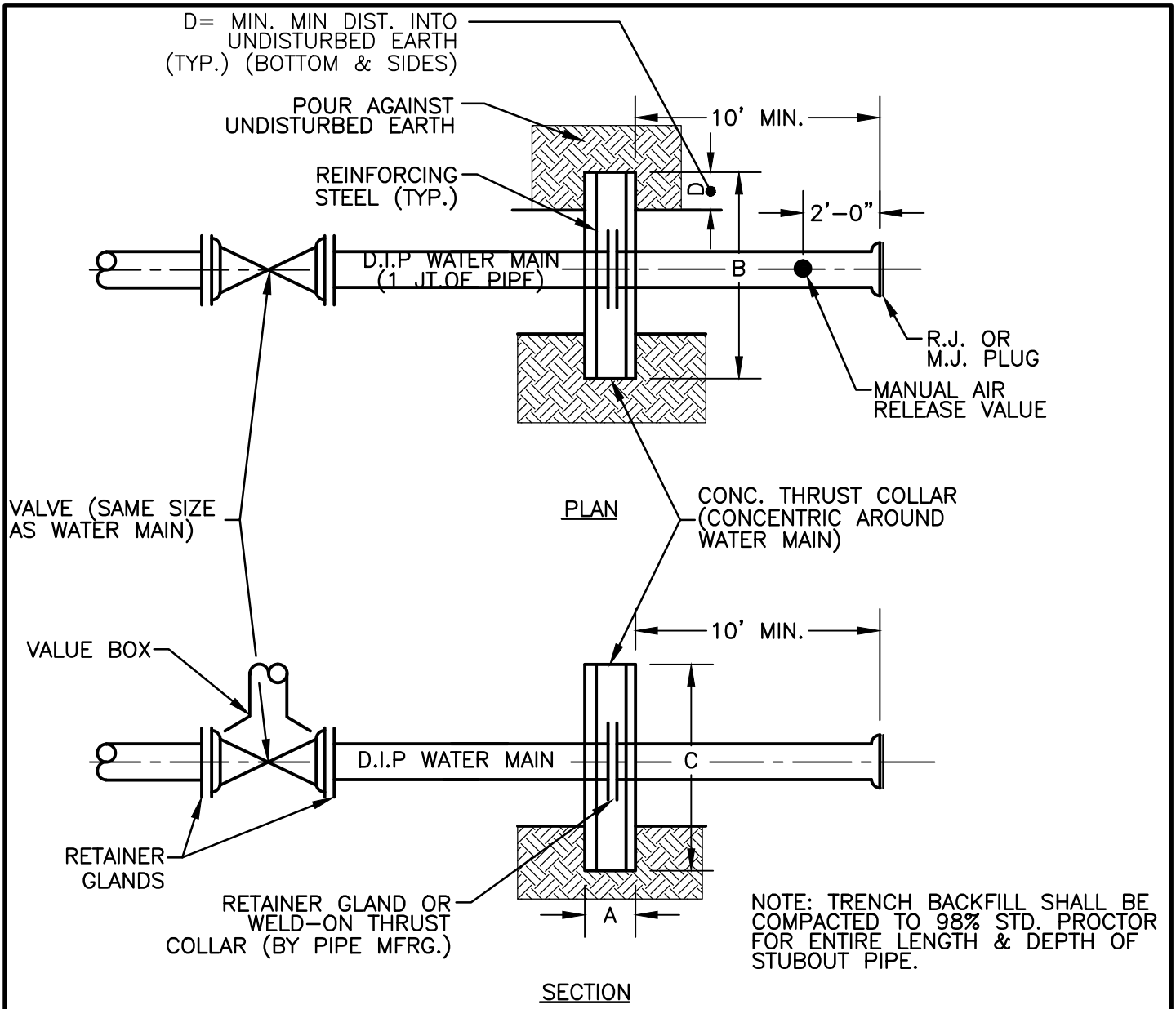

MAIN DIA	CONCRETE COLLAR DIM.				REINFORCING STEEL
	A	B	C	D	
6"OR 8"	1'-0"	4'-6"	4'-6"	1'-0"	#9 @ 12" O.C. E.W.E.F
12"	1'-2"	5'-4"	5'-2"	1'-2"	#9 @ 12" O.C. E.W.E.F
16"	1'-3"	5'-10"	5'-7"	1'-3"	#9 @ 12" O.C. E.W.E.F
20"	1'-6"	6'-8"	6'-2"	1'-6"	#9 @ 12" O.C. E.W.E.F

TEST PRESSURE: 250 P.S.I.
SOIL BEARING PRESSURE: 2500 P.S.F.

NOTE: TERMINATION DETAIL FOR LARGER DIAMETER PIPE SHALL BE DETERMINED FOR EACH PROJECT.

THIS DETAIL WAS TAKEN FROM THE CITY OF ATLANTA'S WEBSITE. IT MAY HAVE BEEN MODIFIED AND SHOULD BE REVIEWED THOROUGHLY.

City of Atlanta

STANDARD DETAILS

TYPICAL WATER MAIN TERMINATION

REV.
DATE: OCT. 2011
ORIG. DATE: OCT. 2004
SCALE: N.T.S.

DETAIL NO. WR-G_MT001

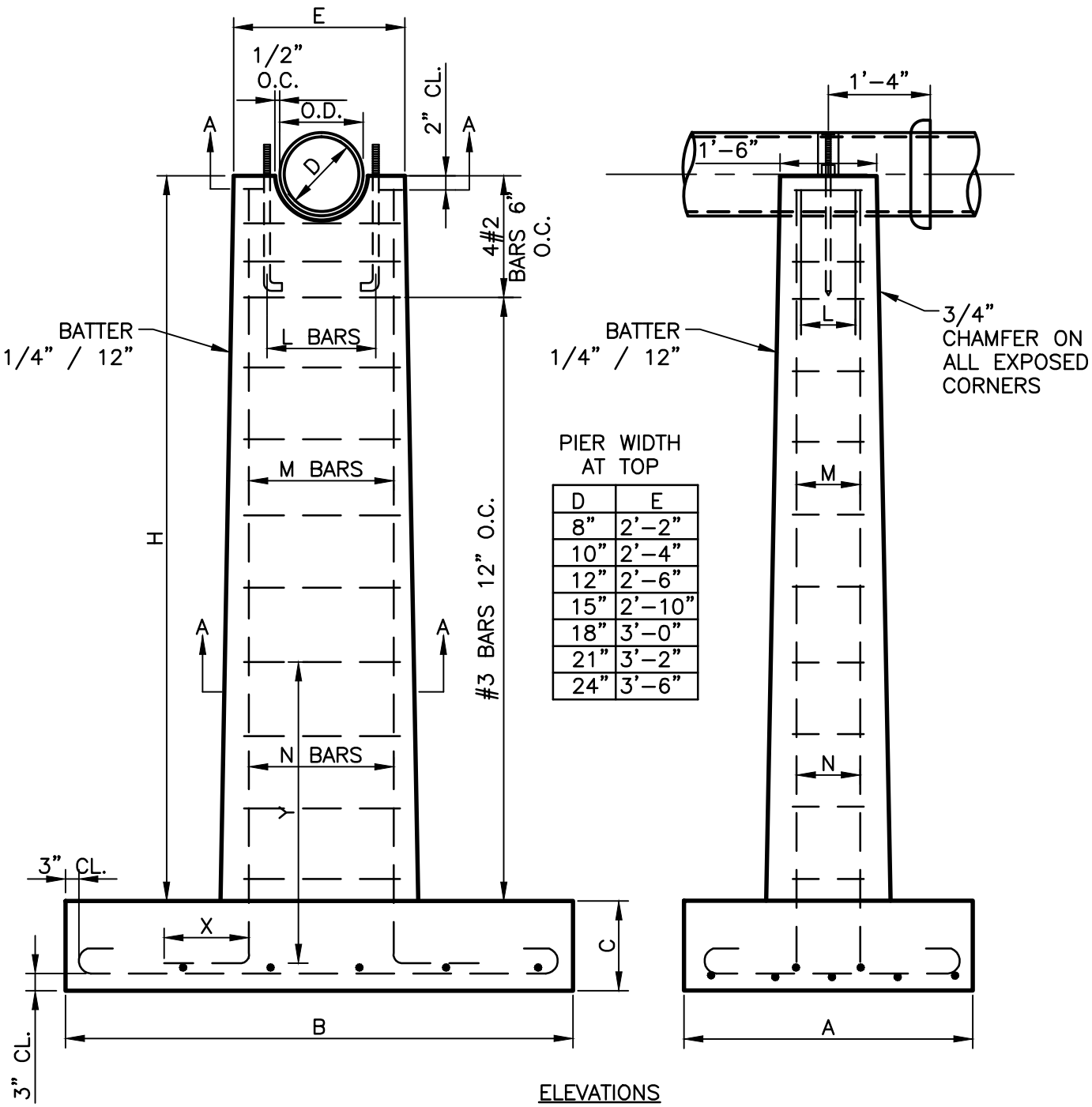

PIER WIDTH AT TOP

D	E
8"	2'-2"
10"	2'-4"
12"	2'-6"
15"	2'-10"
18"	3'-0"
21"	3'-2"
24"	3'-6"

NOTE:
WRAP TWO) PLIES OF ROOFING AT PIPE SUPPORTS 27 FT. BETWEEN CENTERLINE OF PIERS UNLESS OTHERWISE SPECIFIED.

THIS DETAIL WAS TAKEN FROM THE CITY OF ATLANTA'S WEBSITE. IT MAY HAVE BEEN MODIFIED AND SHOULD BE REVIEWED THOROUGHLY.

City of Atlanta

STANDARD DETAILS

STANDARD REINFORCED CONCRETE PIER 1 OF 3

REV.
DATE: SEPT 2011
ORIG. DATE: JULY 1984
SCALE: N.T.S.

DETAIL NO. WR-G_PR001

CLAMP DETAIL

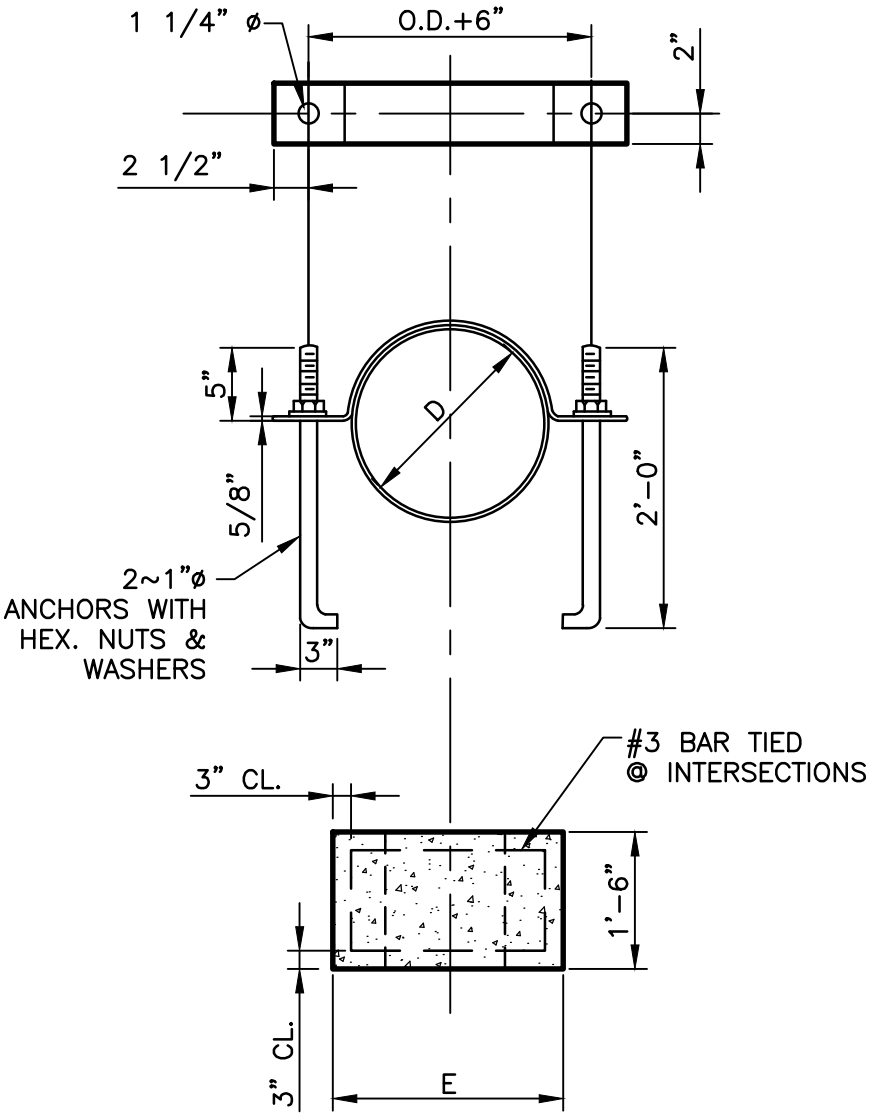

SECTION A–A

THIS DETAIL WAS TAKEN FROM THE CITY OF ATLANTA'S WEBSITE. IT MAY HAVE BEEN MODIFIED AND SHOULD BE REVIEWED THOROUGHLY.

City of Atlanta	STANDARD DETAILS	REV. DATE: SEPT 2011 ORIG. DATE: JULY 1984 SCALE: N.T.S.
	STANDARD REINFORCED CONCRETE PIER 2 OF 3	DETAIL NO. WR–G_PR001

PR-1	STD. REINFORCED PIER									SHEET 3 OF 3		
FOOTING DIMENTIONS & REINFORCEMENT								PIER REINFORCEMENT				
PIER H	FOOTING			NO OF #5 BARS EA. DIRECTION				BARS M	BARS N			
	A	B	C	8"&10"D.	12"&14"D.	16"&18"D.	20"&24"D.	NO.~SIZE~LENGTH	NO.~SIZE~LENGTH		X	Y
0–4'	3'–0"	6'–0"	1'–3"	5	5	5	5	NONE	4#6 H+2'–0"		1'–2"	H+10"
5'	3'–2"	6'–2"	"	"	"	"	"	"	" " "		"	"
6'	3'–4"	6'–4"	"	"	"	"	"	4#6 4'–10"	" " 5'–4"		"	4'–2"
7'	3'–6"	6'–6"	"	"	"	"	6	" " 5'–10"	" " "		"	"
8'	3'–8"	6'–8"	"	"	"	"	"	" " 6'–10"	" " "		"	"
9'	3'–10"	6'–10"	"	"	"	6	7	" " 7'–10"	" " "		"	"
10'	4'–0"	7–0"	"	"	"	"	"	" " 8'–10"	" " "		"	"
11'	4'–2"	7–2"	"	"	"	7	8	" " 9'–10"	" " "		"	"
12'	4'–4"	7–4"	"	"	"	"	"	" " 10'–10"	" " "		"	"
13'	4'–6"	7–6"	1'–6"	"	6	"	"	" " 11'–10"	" " 5'–7"		"	4'–5"
14'	4'–8"	7–8"	"	6	"	8	9	" " 12'–10"	" " "		"	"
15'	4'–10"	7–10"	"	"	"	"	"	" " 13'–10"	" " "		"	"
16'	5'–0"	8'–0"	"	"	"	"	"	" " 14'–10"	" " "		"	"
17'	5'–2"	8'–2"	"	"	7	9	10	" " 15'–10"	" " "		"	"
18'	5'–4"	8'–4"	"	7	8	"	"	" " 16'–10"	" " "		"	"
19'	5'–6"	8'–6"	"	"	"	10	11	" " 17'–10"	" " "		"	"
20'	5'–8"	8'–8"	"	"	9	"	12	" " 18'–10"	" " "		"	"
21'	5'–10"	8'–10"	"	8	"	11	"	" " 19'–10"	" " 6'–0"		1'–3"	4'–9"
22'	6'–0"	9'–0"	"	9	10	12	13	" " "	" " 7'–0"		"	5'–9"
23'	6'–2"	9'–2"	"	"	"	"	"	" " "	" " "		"	6'–9"
24'	6'–4"	9'–4"	"	10	11	13	15	" " "	" " 9'–0"		"	7'–9"
25'	6'–6"	9'–6"	"	"	"	14	16	" " "	" " 11'–0"		1'–9"	9'–3"
26'	6'–8"	9'–8"	"	11	12	15	"	" " "	" " 12'–0"		"	10'–5"
27'	6'–10"	9'–10"	"	12	13	16	17	" " "	" " 13'–0"		"	11'–3"
28'	7'–0"	10'–0"	"	"		"	18	" " "	" " 14'–0"		"	12'–3"

BARS L	H	NO. – SIZE – LENGTH	
	0–4"	NONE	PR-2
	4–28"	2#6 2'–6"	

NOTE:

CONCRETE TO BE 3,000 PSI 28 DAY STRENGTH OR BETTER.
STEEL REINFORCEMENT TO BE A.S.T.M. DESIGNATION A–15–54T UNLESS OTHERWISE SPECIFIED, BENDS ??????????????????????

THIS DETAIL WAS TAKEN FROM THE CITY OF ATLANTA'S WEBSITE. IT MAY HAVE BEEN MODIFIED AND SHOULD BE REVIEWED THOROUGHLY.

City of Atlanta

STANDARD DETAILS

STANDARD REINFORCED CONCRETE PIER 3 OF 3

REV.
DATE: SEPT 2011
ORIG. DATE: JULY 1984
SCALE: N.T.S.

DETAIL NO. WR–G_PR001

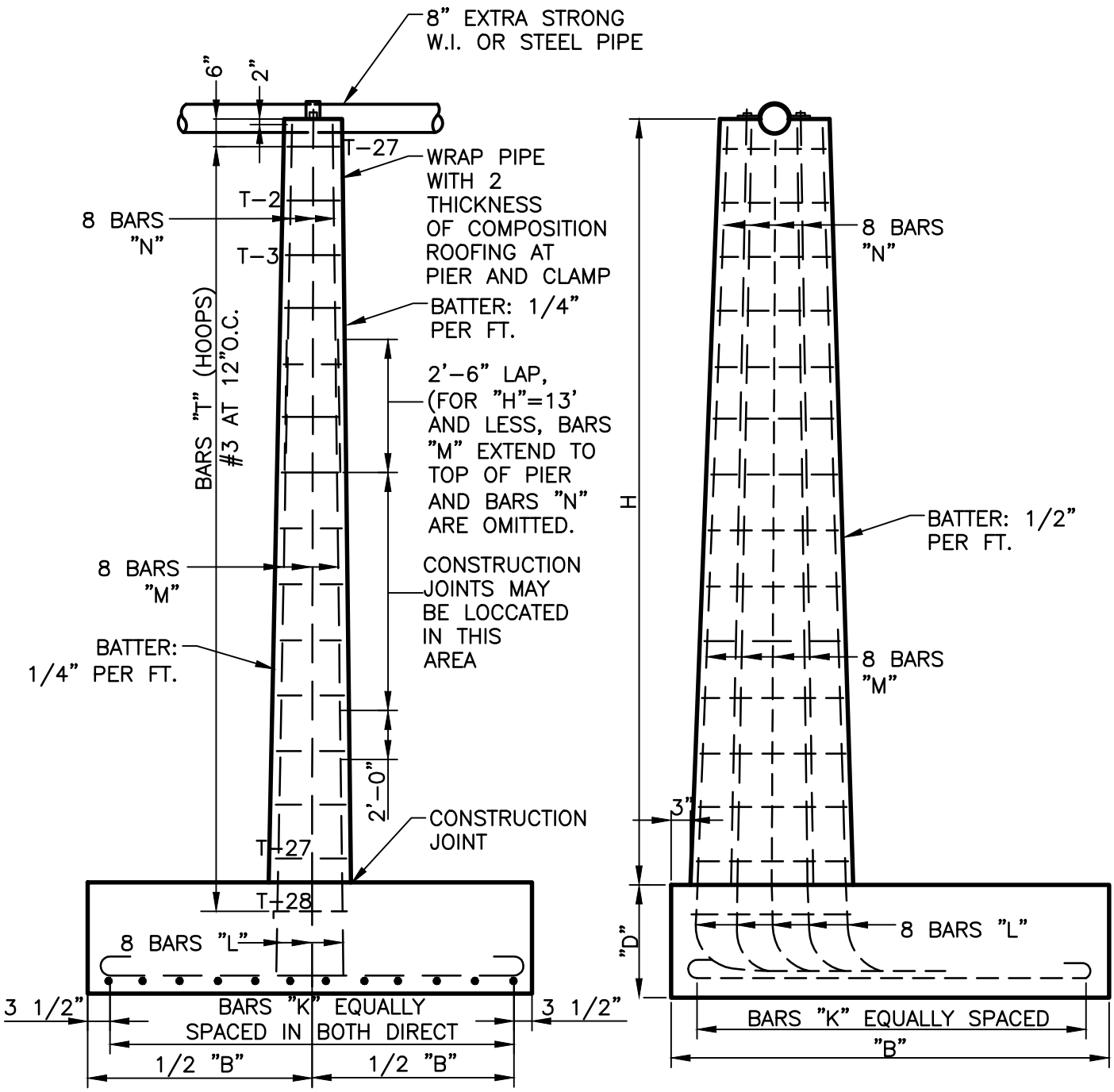

THIS DETAIL WAS TAKEN FROM THE CITY OF ATLANTA'S WEBSITE. IT MAY HAVE BEEN MODIFIED AND SHOULD BE REVIEWED THOROUGHLY.

City of Atlanta	STANDARD DETAILS	REV. DATE: SEPT 2011 ORIG. DATE: JULY 1984 SCALE: N.T.S.
	STANDARD CUT-WATER PIERS 1 OF 6	DETAIL NO. WR-G_PR002

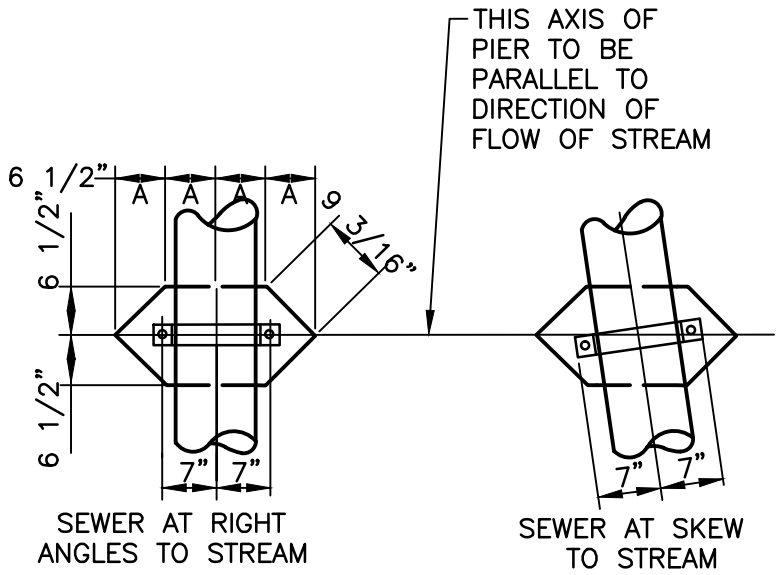

PLAN OF TOP OF PIER
(FOR 8" PIPE)

THIS DETAIL WAS TAKEN FROM THE CITY OF ATLANTA'S WEBSITE. IT MAY HAVE BEEN MODIFIED AND SHOULD BE REVIEWED THOROUGHLY.

City of Atlanta	STANDARD DETAILS	REV. DATE: SEPT 2011 ORIG. DATE: JULY 1984 SCALE: N.T.S.
	STANDARD CUT–WATER PIERS 2 OF 6	DETAIL NO. WR–G_PR002

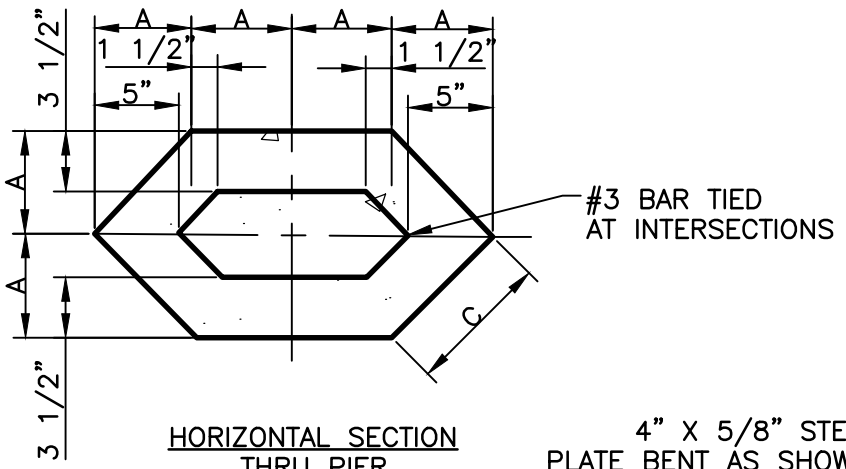

HORIZONTAL SECTION
THRU PIER

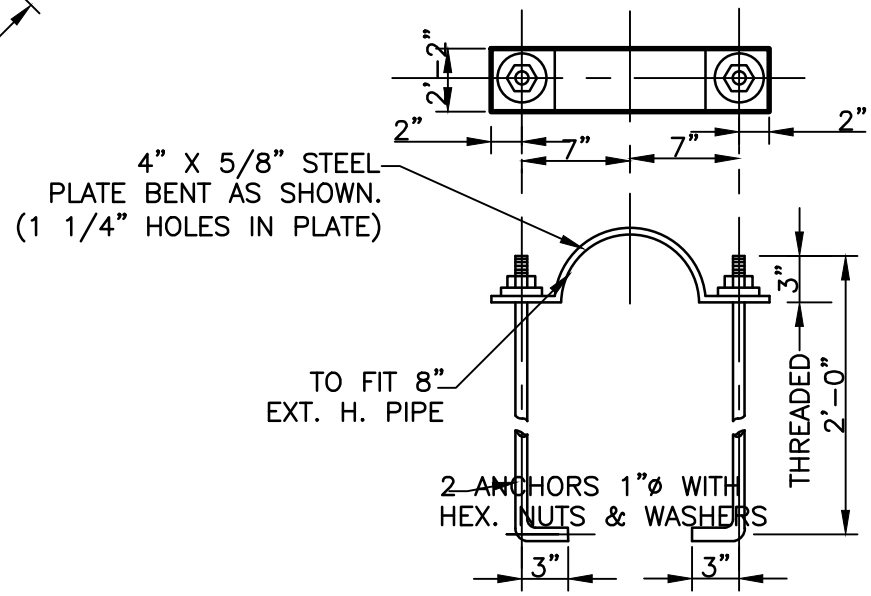

DETAIL OF CLAMP

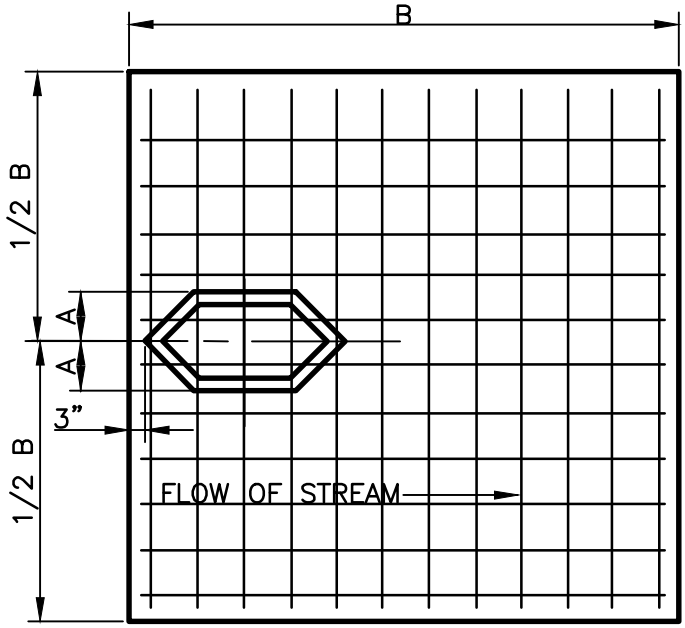

PLAN OF FOOTING

THIS DETAIL WAS TAKEN FROM THE CITY OF ATLANTA'S WEBSITE. IT MAY HAVE BEEN MODIFIED AND SHOULD BE REVIEWED THOROUGHLY.

City of Atlanta	STANDARD DETAILS	REV. DATE: SEPT 2011 ORIG. DATE: JULY 1984 SCALE: N.T.S.
	STANDARD CUT–WATER PIERS 3 OF 6	DETAIL NO. WR–G_PR002

TABLE NO. 1
THIS TABLE APPLIES TO 8" PIPE
FOR OTHER SIZES – INCREASE DIMENSIONS AS SHOWN IN TABLE NO.2 (SHEET 4).

"H"	"D"	"B"	"A"	"C"	REINFORCING BARS					CONCRETE	
(FEET)	(FT–IN.)	(FT–IN.)	(INCHES)	(INCHES)	BARS "K"	BARS "L"	BARS "M"	BARS "N"	BARS "T"	FOOT.	PIER
1			6 3/4"	9 9/16"					T–1 5/8" ø 4'–10"		
2			7"	9 7/8"					T–2 " 5'–0"		
3	1'–0	7'–0"	7 1/4"	10 1/4"	18, K–3	8, L–3			T–3 " 5'–3"	1.82	.22
4	1'–3"	"	7 1/2"	10 5/8"	" "	8, L–4	8, 5/8" ø X 3'–10"		T–4 " 5'–5"	2.27	.31
5	1'–6"	"	7 3/4"	10 15/16"	" "	" "	" " 4'–10"		T–5 " 5'–8"	2.73	.40
6	1'–9"	"	8"	11 5/16"	" "	" "	" " 5'–10"		T–6 " 5'–10"	3.18	.49
7	1'–3"	8'–0"	8 1/4"	11 11/16"	20, K–7	" "	" " 6'–10"		T–7 " 6'–1"	2.97	.60
8	1'–5"	"	8 1/2"	12"	" "	" "	" " 7'–10"		T–8 " 6'–3"	3.36	.70
9	1'–7"	"	8 3/4"	13 3/8"	" "	" "	" " 8'–10"		T–9 " 6'–6"	3.76	.82
10	1'–9"	"	9"	12 3/4"	" "	8, L–10	" " 9'–10"		T–10 " 6'–8"	4.15	.94
11	1'–5"	9'–0"	9 1/4"	13 1/16"	28, K–11	" "	" " 10'–10"		T–11 " 6'–11"	4.25	1.07
12	1'–6"	"	9 1/2"	13 7/16"	" "	" "	" " 11'–10"		T–12 " 7'–1"	4.50	1.20
13	1'–7"	"	9 3/4"	13 13/16"	" "	" "	" " 12'–10"		T–13 " 7'–4"	4.75	1.35
14	1'–8"	"	10"	14 1/8	" "	8, L–14	8, 7/8" ø X 6'–6"	8, 5/8" ø X 9'–10"	T–14 " 7'–6"	5.00	1.50
15	1'–9"	"	10 1/4"	14 1/2"	" "	" "	" " 7'–6"	" " "	T–15 " 7'–9"	5.25	1.66
16	1'–6"	10'–0"	10 1/2"	14 7/8"	28, K–16	" "	" " 8'–6"	" " "	T–16 " 7'–11"	5.56	1.82
17	1'–7"	"	10 3/4"	15 3/16"	" "	" "	" " 9'–6"	" " "	T–17 " 8'–2"	5.87	2.00
18	1'–8"	"	11"	15 9/16"	" "	" "	" " 10'–6"	" " "	T–18 " 8'–5"	6.18	2.18
19	1'–9"	"	11 1/4"	17 7/8"	" "	8, L–19	8, 1" ø X 10'–0"	" " 11'–4"	T–19 " 8'–7"	6.49	2.37
20	1'–10"	"	11 1/2"	16 1/4"	" "	" "	" " 11'–0"	" " "	T–20 " 8'–10"	6.79	2.57
21	1'–11"	"	11 3/4"	16 5/8"	" "	" "	" " 12'–0"	" " "	T–21 " 9'–0"	7.10	2.78
22	2'–0"	"	12"	17"	" "	" "	" " 13'–0"	" " "	T–22 " 9'–2"	7.41	3.00
23	1'–11"	10'–6"	12 1/4"	17 5/16"	24, K–23	" "	" " 14'–0"	" " "	T–23 " 9'–5"	7.83	3.22
24	2'–0"	"	12 1/2"	17 11/16"	" "	8, L–24	" " 15'–0"	" " "	T–24 " 9'–8"	8.17	3.46
25	2'–1"	"	12 3/4"	18"	" "	" "	" " 16'–0"	" " "	T–25 " 9'–10"	8.51	3.70
26	2'–2"	"	13"	18 3/8"	" "	" "	" " 17'–0"	" " "	T–26 " 10'–1"	8.85	3.96
27	2'–3"	"	13 1/4"	18 3/4"	" "	" "	" " 18'–0"	" " "	T–27 " 10'–3"	9.19	4.23
28	2'–4"	"	13 1/2"	19 1/16"	" "	" "	" " 19'–0"	" " "	T–28 " 10'–5"	9.53	4.50

NOTE:

BARS "L" AND "K" ARE TO BE BENT IN SHOP. BARS "T" MAY BE BENT AT SITE OF WORK. EACH PIER REQUIRES BARS T–I TO T–H INCLUSIVE (H=HEIGHT OF PIER IN FEET). ALL BARS SHALL CONFORM TO THE REQUIERMENTS OF THE "STANDARD SPECIFICATIONS FOR BILLET STEEL BARS FOR CONCRETE REINFORCEMENT", A.S.T.M. SERIAL DESIGNATION A–15–39. ALL BARS EXCEPT 1/4" ø SHALL BE DEFORMED BARS. THE CONCRETE SHALL BE 3000 P.S.I. AT 28 DAYS.

THIS DETAIL WAS TAKEN FROM THE CITY OF ATLANTA'S WEBSITE. IT MAY HAVE BEEN MODIFIED AND SHOULD BE REVIEWED THOROUGHLY.

City of Atlanta

STANDARD DETAILS

STANDARD
CUT–WATER PIERS 4 OF 6

REV.
DATE: SEPT 2011
ORIG. DATE: JULY 1984
SCALE: N.T.S.

DETAIL NO. WR–G_PR002

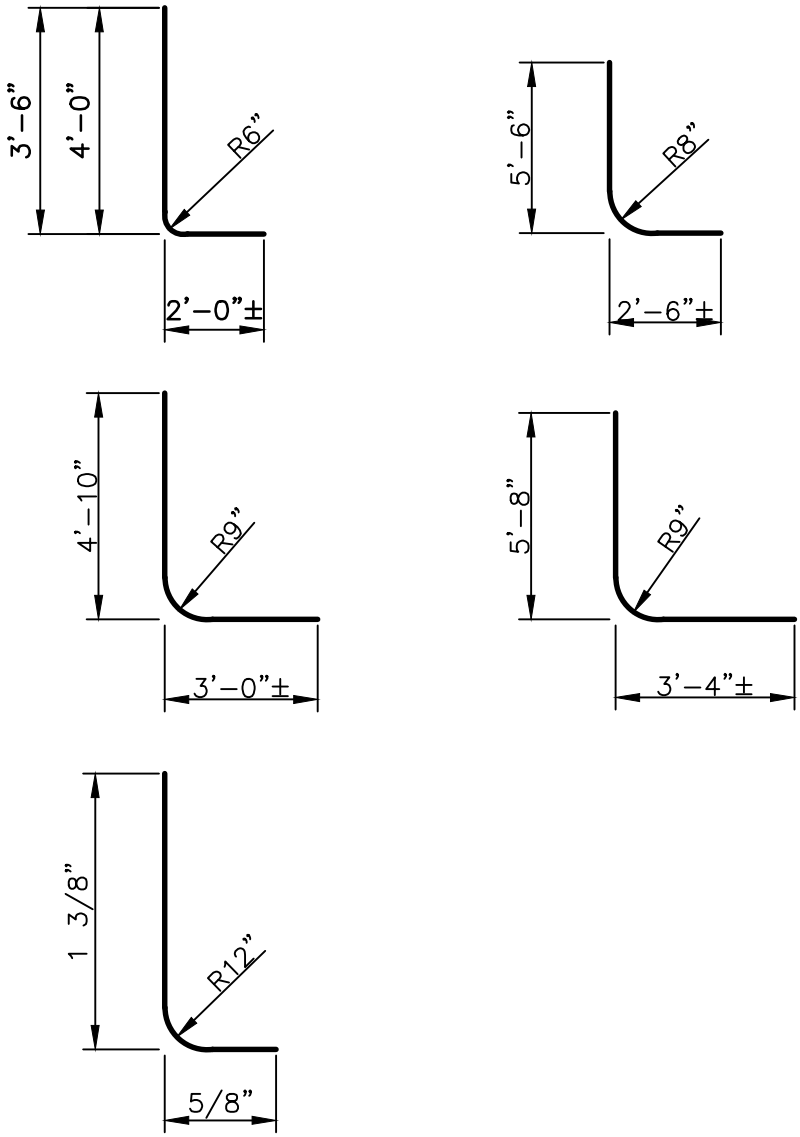

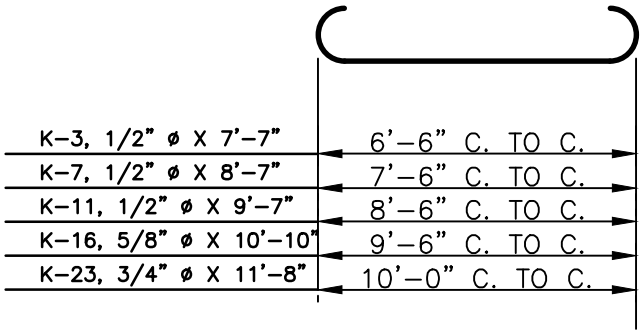

K-3, 1/2" ø X 7'-7"	6'-6" C. TO C.
K-7, 1/2" ø X 8'-7"	7'-6" C. TO C.
K-11, 1/2" ø X 9'-7"	8'-6" C. TO C.
K-16, 5/8" ø X 10'-10"	9'-6" C. TO C.
K-23, 3/4" ø X 11'-8"	10'-0" C. TO C.

THIS DETAIL WAS TAKEN FROM THE CITY OF ATLANTA'S WEBSITE. IT MAY HAVE BEEN MODIFIED AND SHOULD BE REVIEWED THOROUGHLY.

City of Atlanta

STANDARD DETAILS

STANDARD
CUT-WATER PIERS 5 OF 6

REV.
DATE: SEPT 2011
ORIG. DATE: JULY 1984
SCALE: N.T.S.

DETAIL NO. WR-G_PR002

TABLE NO. 2	
SIZE OF PIPE	INCREASE "A"
8"	SEE TABLE NO. 1
10"	1"
12"	2"
14"	3"
16"	4"
18"	5"
20"	6"
21"	7"
24"	8"

NOTES:

1. FOOTINGS SHALL BE ON FIRM EARTH BELOW DANGER OF SCOUR.
2. EXCAVATION SHALL BE APPROVED BY THE ENGINEER BEFORE CONCRETE IS PLACED.
3. AT CONSTRUCTION JOINTS, THE CONCRETE SHALL BE LEFT ROUGH, AND SHALL BE THROUGHLY CLEANED BEFORE NEW CONCRETE IS PLACED.
4. ALL MATERIAL AND WORKMANSHIP SHALL BE OF BEST QUALITY, AND SUBJECT TO THE APPROVAL OF THE CHIEF OF CONSTRUCTION.
5. PIERS ARE DESIGNED TO SUPPORT 8" PIPE AND SUBMERGED IN WATER FLOWING 9 FEET PER SECOND.
6. MAXIMUM SPANS FOR 8" PIPE: 30'-0" FOR END SPANS;
   40'-0" FOR INTERMEDIATE SPANS.
7. PIPE SHALL BE CONTINUOUS FOR FULL LENGHT OF CROSSING, WITH JOINTS WELDED TO DEVELOP FULL STRENGTH OF PIPE.
8. MAXIMUM STRESS IN CONCRETE-950 P.S.I. IN REINFORCING-18000 P.S.I.
9. MAXIMUM FOUNDATION PRESSURE: 1000 P.S.F.

THIS DETAIL WAS TAKEN FROM THE CITY OF ATLANTA'S WEBSITE. IT MAY HAVE BEEN MODIFIED AND SHOULD BE REVIEWED THOROUGHLY.

City of Atlanta

STANDARD DETAILS

STANDARD
CUT-WATER PIERS 6 OF 6

REV.
DATE: SEPT 2011
ORIG. DATE: JULY 1984
SCALE: N.T.S.

DETAIL NO. WR-G_PR002

NOTE:
CHAMFER EXPOSED
CORNERS OF CONRETE
3/4"

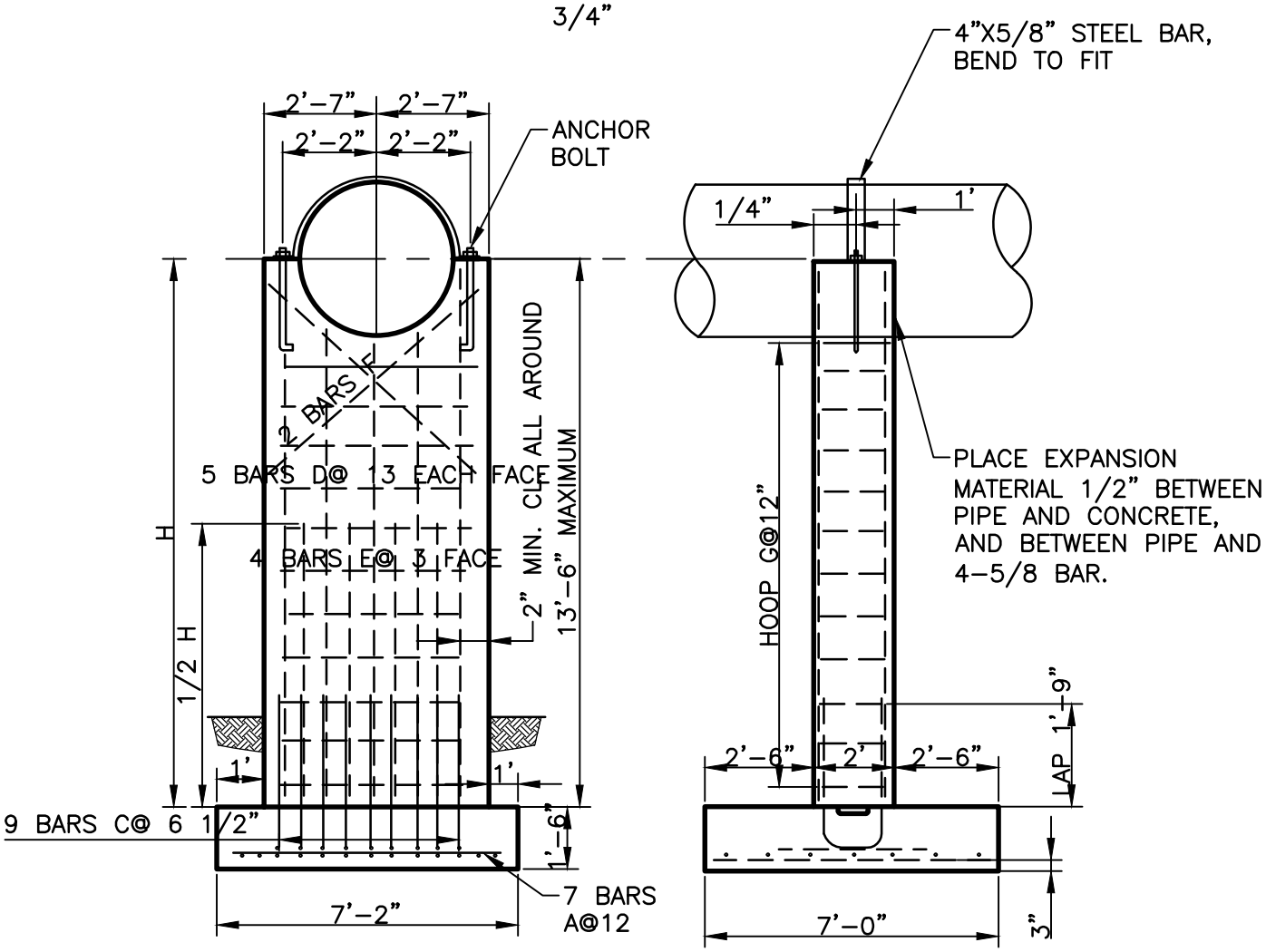

THIS DETAIL WAS TAKEN FROM THE CITY OF ATLANTA'S WEBSITE. IT MAY HAVE BEEN MODIFIED AND SHOULD BE REVIEWED THOROUGHLY.

City of Atlanta	STANDARD DETAILS	REV.
		DATE: SEPT 2011
	STANDARD PIER TO SUPPORT 42" STEEL OVER DRY LAND (MAXIMUM SPAN OF 42 FEET) SHEET 1 OF 2	ORIG. DATE: JULY 1984
		SCALE: N.T.S.
		DETAIL NO. WW-G_PR003

REINFORCEMENT BARS				
MARK	REQUIRED	SIZE	LENGTH	TYPE
A	7	5	6'–10"	STRAIGHT
B	13	?	?????	STRAIGHT
C	18	6	2"	BENT
D1	2	6	3"	STRAIGHT
D2	4	6	4"	STRAIGHT
D3	4	6	5"	STRAIGHT
E	8	6	6"	STRAIGHT
F	4	6	7"	STRAIGHT
G	VARIES	3	8"	BENT

ALL REINFORCEMENT SHALL BE DEFORMED BARS OF INTERMEDIATE GRADE STEEL CONFORMING AT A.S.T.M. SPECIFICATIONS A15–50T

CONCRETE SHALL BE IN APPROVED MIX DEVELOPING A COMPRESSIVE STRENGTH OF 3,000 P.S.I. BEFORE THE SEWER IS PLACED.

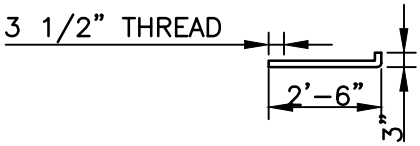

ANCHOR BOLT
2 REQUIRED FOR EACH PIER. 1 NUT & 1, 3"x3" x3/8" PLATE WASHER WITH EACH BOLT

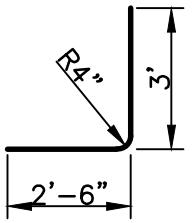

BAR C

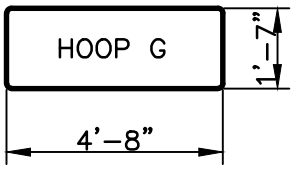

NOTE:
FOR PIERS WITH "H" NOT MORE THAN 8'–6" SEE DRAWING DATED FEB 16, 1961

THIS DETAIL WAS TAKEN FROM THE CITY OF ATLANTA'S WEBSITE. IT MAY HAVE BEEN MODIFIED AND SHOULD BE REVIEWED THOROUGHLY.

City of Atlanta

STANDARD DETAILS

STANDARD PIER TO SUPPORT 42" STEEL OVER DRY LAND (MAXIMUM SPAN OF 42 FEET)
SHEET 2 OF 2

REV.
DATE: SEPT 2011
ORIG. DATE: JULY 1984
SCALE: N.T.S.

DETAIL NO. WW–G_PR003

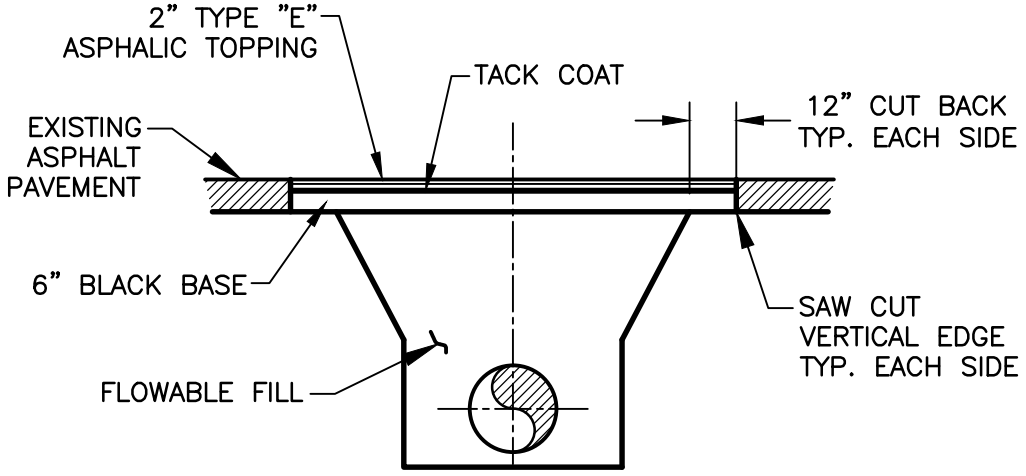

ASPHALT PAVEMENT

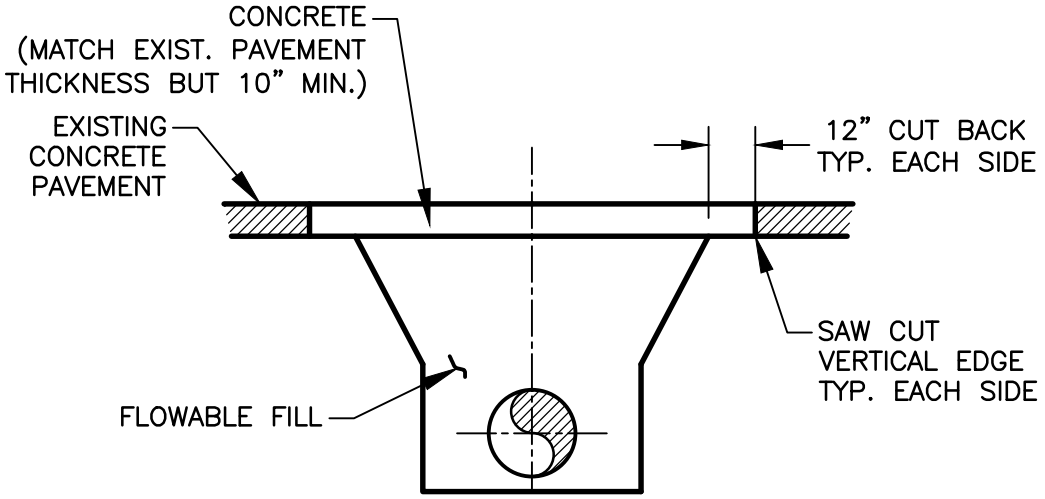

CONCRETE PAVEMENT

NOTE:

TYPE I PAVEMENT REPLACEMENT SHALL BE USED FOR:

1. ALL POINTS REPAIRS
2. ALL TRENCHES, (LONGITUDINAL OR CROSSING INSTALLATIONS) LESS THEN 12–INCHES WIDE AT EXISTING GRADE.
3. ALL TRENCHES FOR ROADWAY CROSSING WHERE THE TRENCH WIDTH AT THE TOP OF THE PIPE IS LESS THAN OR EQUAL TO THREE FEET, AND THE TRENCH DEPTH IS LESS THAN OR EQUAL TO EIGHT FEET.
4. AT CONTRACTOR'S OPTION, IN LIEU OF TYPE III PAVEMENT REPLACEMENT

THIS DETAIL WAS TAKEN FROM THE CITY OF ATLANTA'S WEBSITE. IT MAY HAVE BEEN MODIFIED AND SHOULD BE REVIEWED THOROUGHLY.

City of Atlanta	STANDARD DETAILS	REV. DATE: OCT. 2011 ORIG. DATE: OCT. 2004 SCALE: N.T.S.
	TYPE I PAVEMENT REPLACEMENT	DETAIL NO. WR–G_PV001

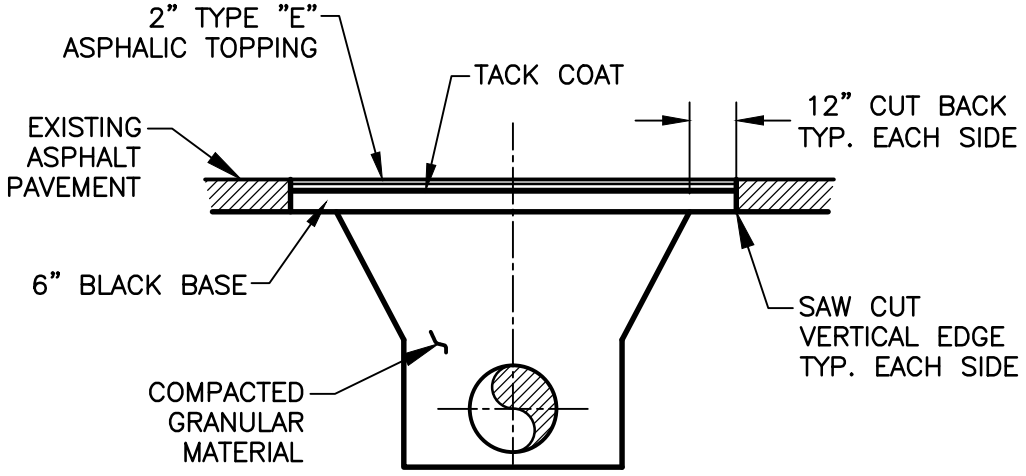

ASPHALT PAVEMENT

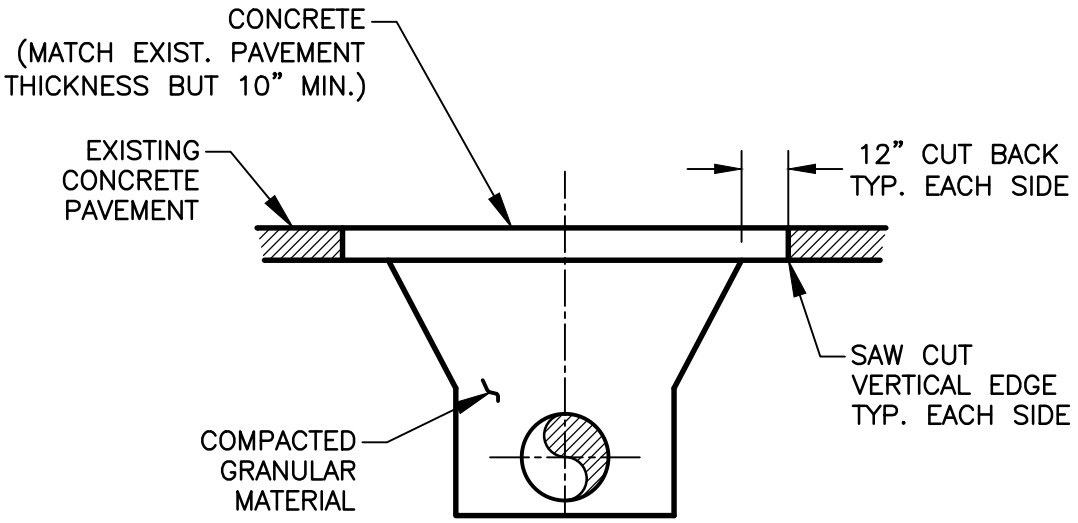

CONCRETE PAVEMENT

NOTE:

TYPE II PAVEMENT REPLACEMENT SHALL BE USED FOR:

1. ALL TRENCHES FOR ROADWAY CROSSING WHICH DO NOT MEET THE CRITERIA FOR TYPE I PAVEMENT REPLACEMENT.
2. ALL TRENCHES, (LONGITUDINAL INSTALLATIONS WHICH DO MEET THAT CRITERIA FOR TYPE III PAVEMENT REPLACEMENT.
3. CONTRACTOR'S OPTION, IN LIEU OF TYPE III PAVEMENT REPLACEMENT

THIS DETAIL WAS TAKEN FROM THE CITY OF ATLANTA'S WEBSITE. IT MAY HAVE BEEN MODIFIED AND SHOULD BE REVIEWED THOROUGHLY.

City of Atlanta	STANDARD DETAILS	REV. DATE: OCT. 2011 ORIG. DATE: OCT. 2004 SCALE: N.T.S.
	TYPE II PAVEMENT REPLACEMENT	DETAIL NO. WR-G_PV002

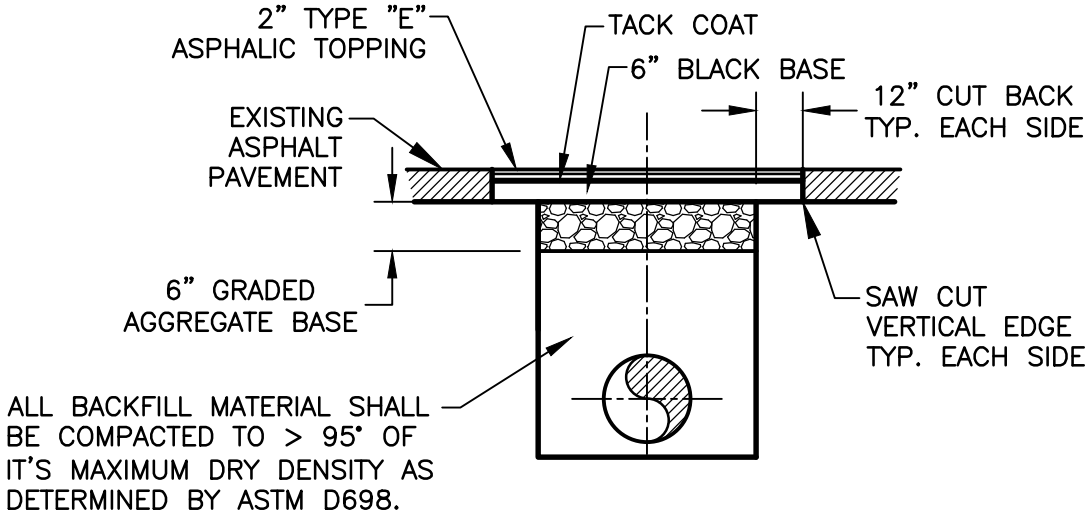

ASPHALT PAVEMENT

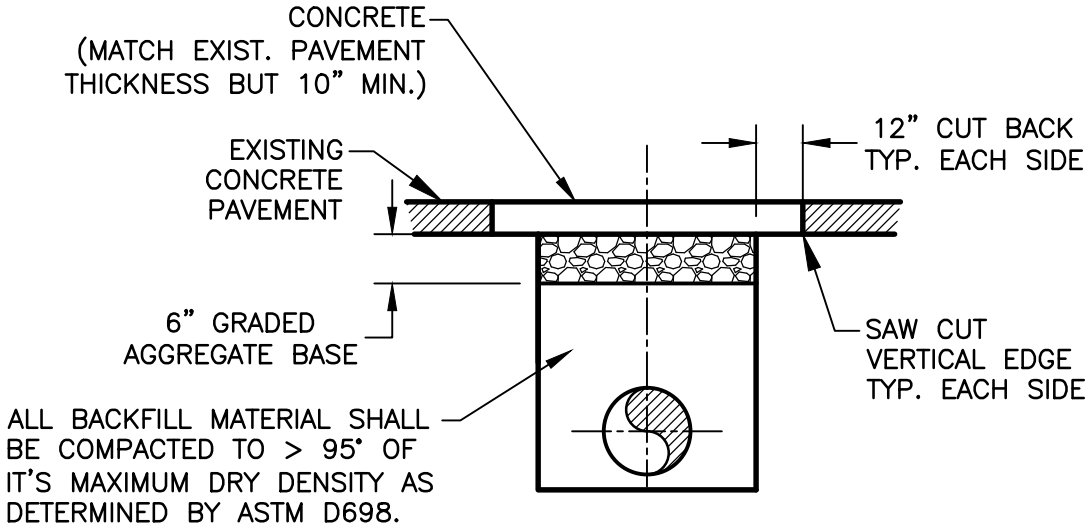

CONCRETE PAVEMENT

NOTE:
TYPE III PAVEMENT REPLACEMENT SHALL BE USED ONLY FOR. LONGITUDINAL INSTALLATION AND WHERE THE TRENCH WIDTH AT THE TOP OF PIPE IS GREATER THAN FOUR FEET.

THIS DETAIL WAS TAKEN FROM THE CITY OF ATLANTA'S WEBSITE. IT MAY HAVE BEEN MODIFIED AND SHOULD BE REVIEWED THOROUGHLY.

City of Atlanta	STANDARD DETAILS	REV. DATE: OCT. 2011 ORIG. DATE: OCT. 2004 SCALE: N.T.S.
	TYPE III PAVEMENT REPLACEMENT	DETAIL NO. WR-G_PV003

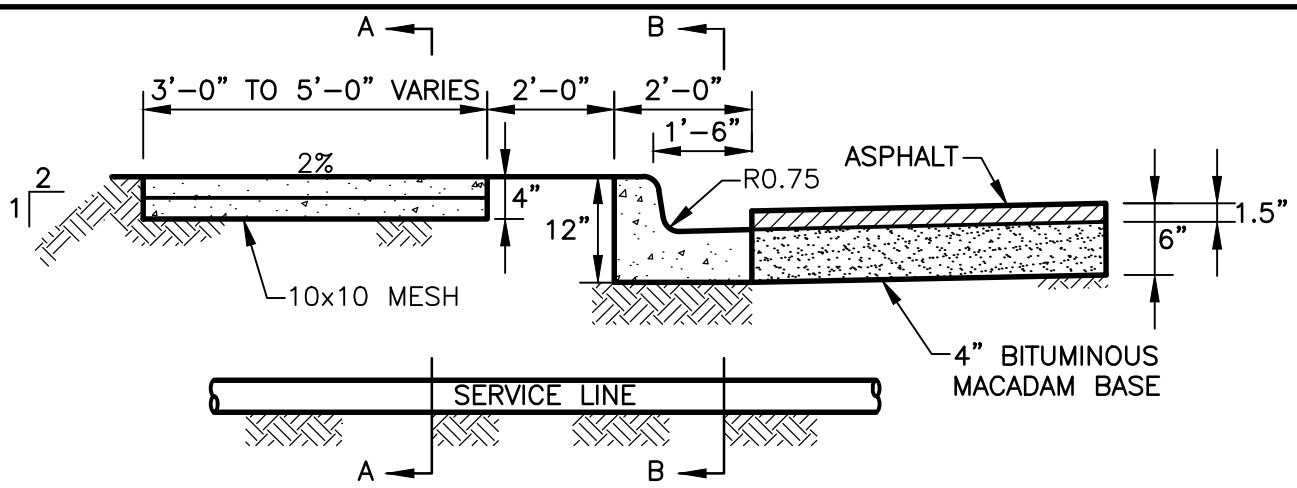

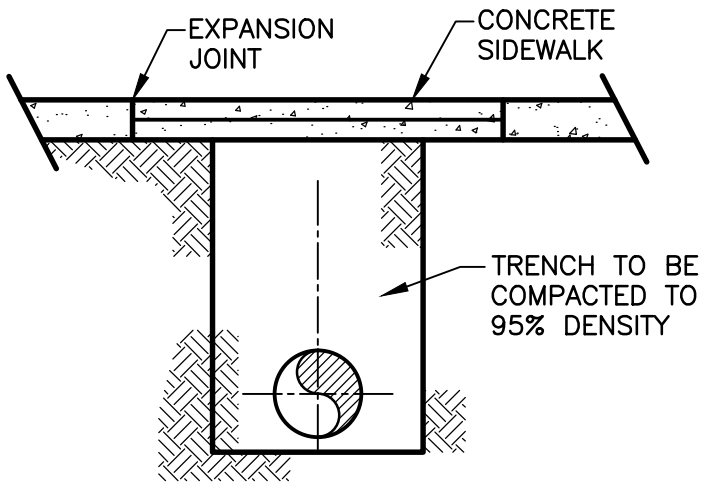

"A"–"A"

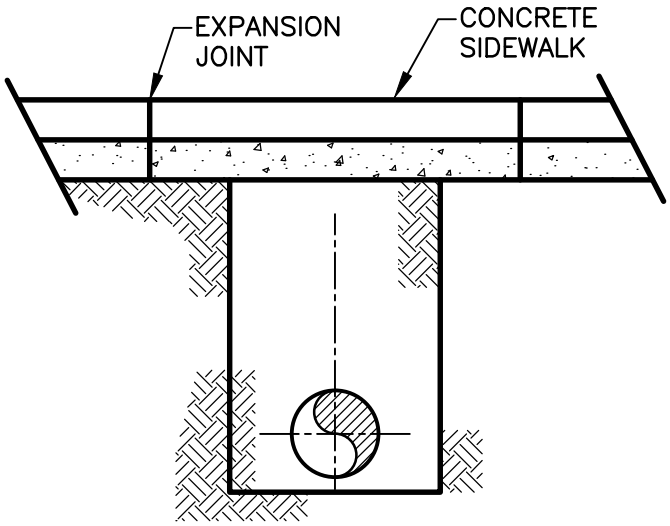

"B"–"B"

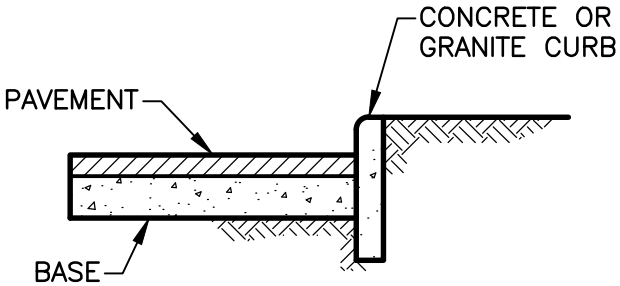

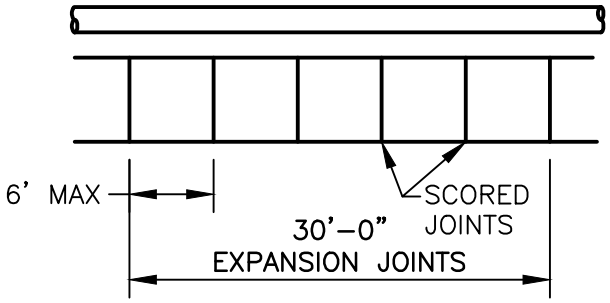

NOTE:

1. DETAILS ARE TYPICAL
2. REPLACE SIDEWALKS, CURB AND GUTTER AND CURBING TO MATCH EXISTING MATERIALS AS DIRECTED.

THIS DETAIL WAS TAKEN FROM THE CITY OF ATLANTA'S WEBSITE. IT MAY HAVE BEEN MODIFIED AND SHOULD BE REVIEWED THOROUGHLY.

City of Atlanta	STANDARD DETAILS	REV.
		DATE: OCT. 2011
	SIDEWALK, CURB AND GUTTER REPAIRS	ORIG. DATE: NOV. 2004
		SCALE: N.T.S.
		DETAIL NO. WR–G_PV004

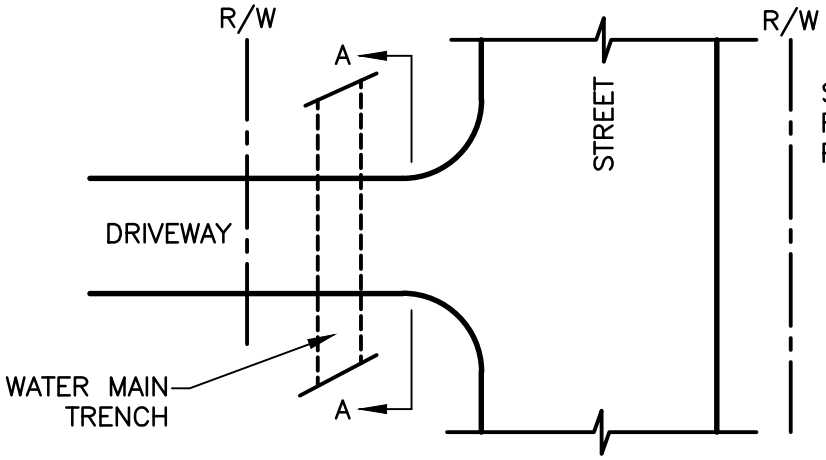

SEE DETAIL NO. (W–40)
FOR ALLOWABLE CUT
PLACEMENT WIDTHS

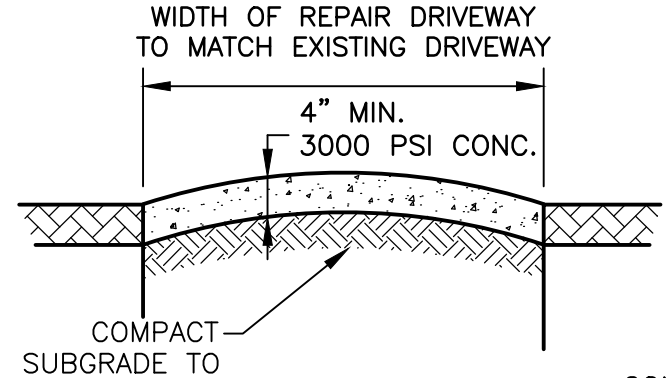

CONCRETE

"A"–"A"

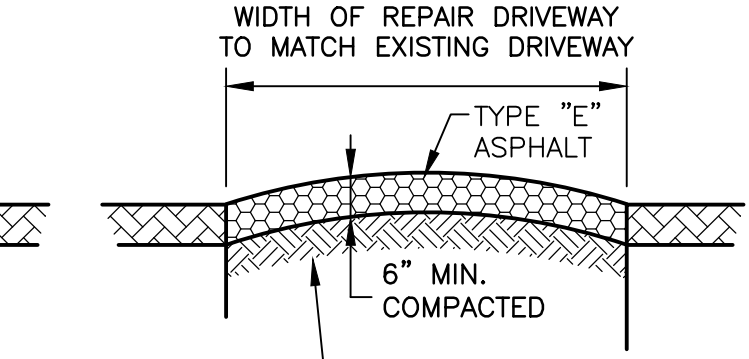

GRAVEL

"A"–"A"

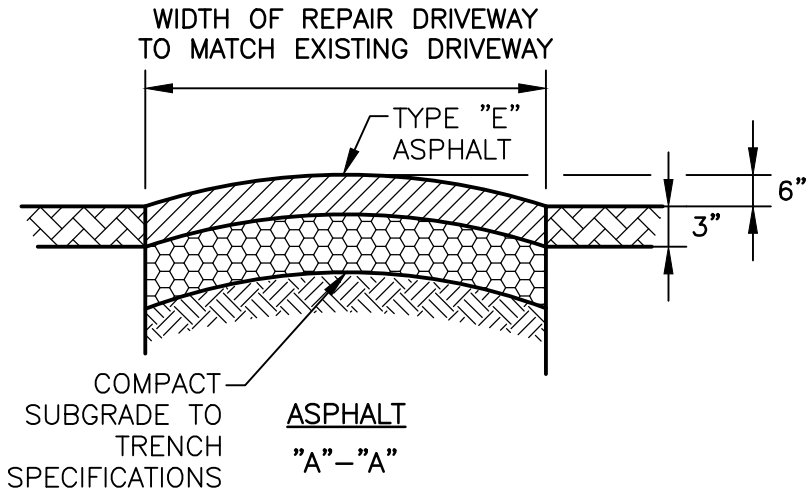

ASPHALT

"A"–"A"

NOTE:
1. FINISHED GRADE TO BE FLUSH WITH THE EDGE OF THE DRIVE–TYPICAL ALL DRIVES.

THIS DETAIL WAS TAKEN FROM THE CITY OF ATLANTA'S WEBSITE. IT MAY HAVE BEEN MODIFIED AND SHOULD BE REVIEWED THOROUGHLY.

City of Atlanta

STANDARD DETAILS

DRIVEWAY CUT REPAIRS
CONCRETE, GRAVEL &
ASPHALT

REV.
DATE: OCT. 2011
ORIG. DATE: NOV. 2004
SCALE: N.T.S.

DETAIL NO. WR–G_PV005

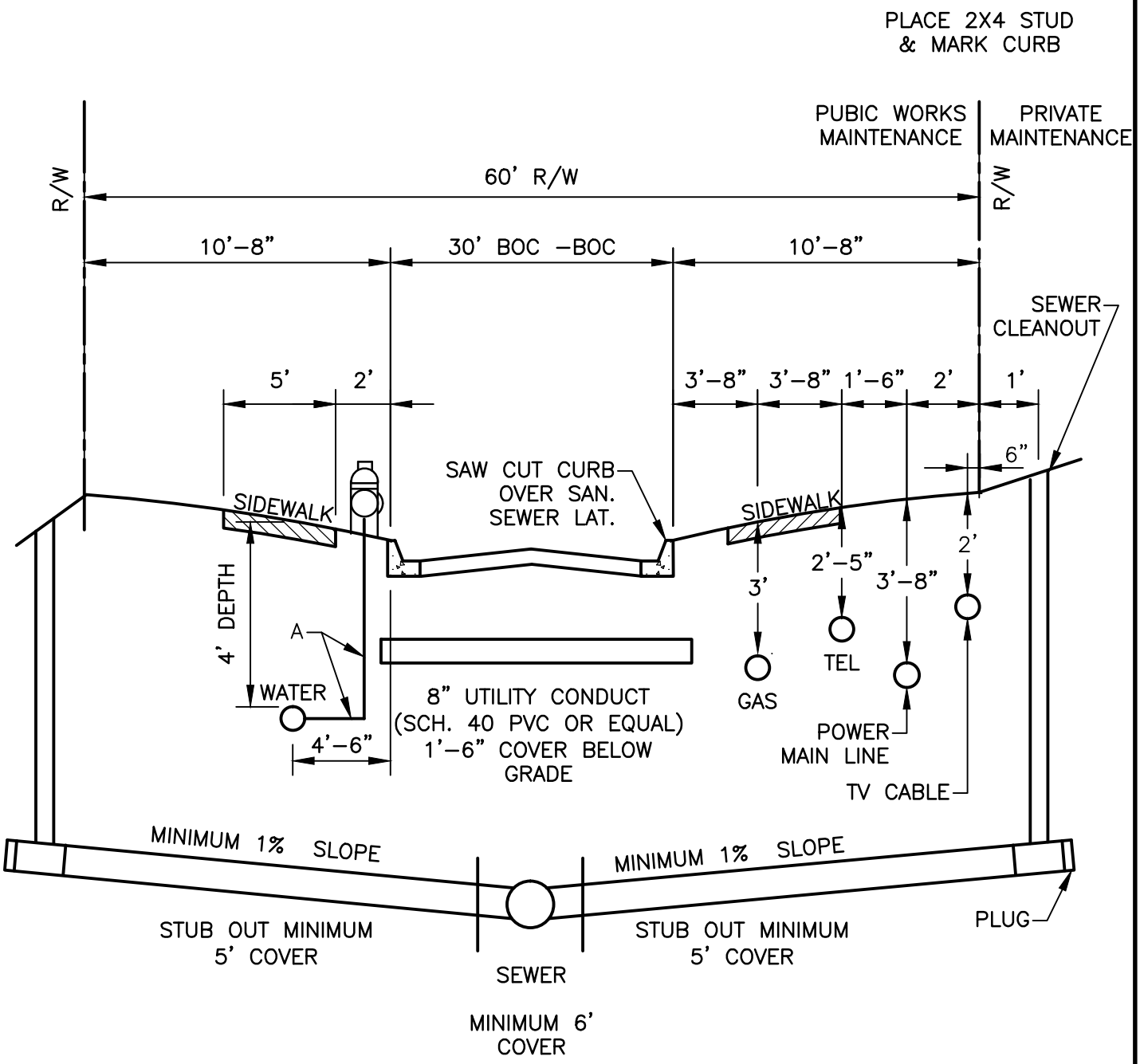

A– FOR DIMENISIONS & DETAILS SEE STD. #900.
SEWER STUB TO BE EXTENTED BETOND R/W
SEE. STD. #907 FOR VALVE CAP DETAIL.

THIS DETAIL WAS TAKEN FROM THE CITY OF ATLANTA'S WEBSITE. IT MAY HAVE BEEN MODIFIED AND SHOULD BE REVIEWED THOROUGHLY.

City of Atlanta	STANDARD DETAILS	REV.
		DATE: OCT. 2011
	UNDERGROUND UTILITY TYPICAL CROSS SECTION	ORIG. DATE: OCT. 2004
		SCALE: N.T.S.
		DETAIL NO. WR–G_RD001

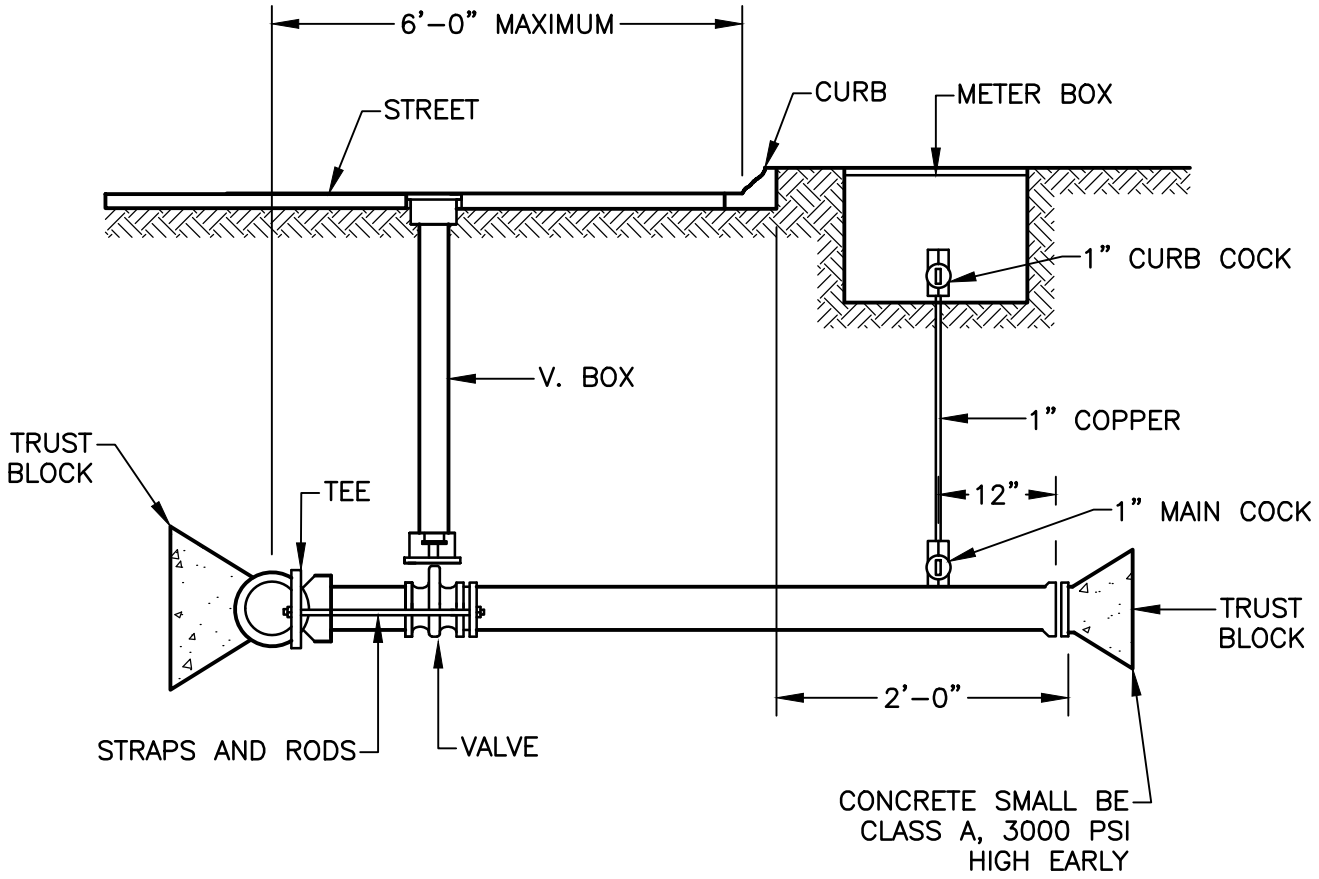

PROCEDURE FOR INSTALLING SPUDS

WHENEVER IT BECOMES NECESSARY TO SPUD OUT A LENGTH OF PIPE, FOR WHATEVER REASON, IT SHALL BE DONE IN THE FOLLOWING MANNER.

1. THE SPUD BE LAID TO THE PROPER LENGTH, PLUGGED WITH PLUG AND GASKET, THEN BRACED TO WITHSTAND THE DESIGNATED TEST PRESSURE.
2 ANY VALVES ON THE SPUD SHALL BE STRAPPED AND CLOSED.
3. A 1-INCH TAP SHALL BE MADE 12-INCHES FROM THE END OF THE SPUD.
4. ROD TO BE HIGH TENSILE, HOT ROLLED STEEL WITH TENSILE STRENTH OF 150,000 P.S.I. AND MINIMUM YIELD STRENGTH OF 130,000 P.S.I..

SPUD SIZES

TYPE SERVICE	TEE BRANCH SIZE	VALVE SIZE	STUB PIPE SIZE
3" METER	6"	6"	6"
4" METER	6"	6"	6"
6" METER	6"	6"	6"
6" DETECTOR	6"	6"	6"
8" METER	8"	8"	8"
8" DETECTOR	8"	8"	8"
12" METER	12"	12"	12"
FIRE SERVICE	AS REQUIRED		

THIS DETAIL WAS TAKEN FROM THE CITY OF ATLANTA'S WEBSITE. IT MAY HAVE BEEN MODIFIED AND SHOULD BE REVIEWED THOROUGHLY.

City of Atlanta

STANDARD DETAILS

TYPICAL SPUD INSTALLATION MAIN IN STREET

REV.
DATE: OCT. 2011
ORIG. DATE: OCT. 2004
SCALE: N.T.S.

DETAIL NO. WR-G_SP001

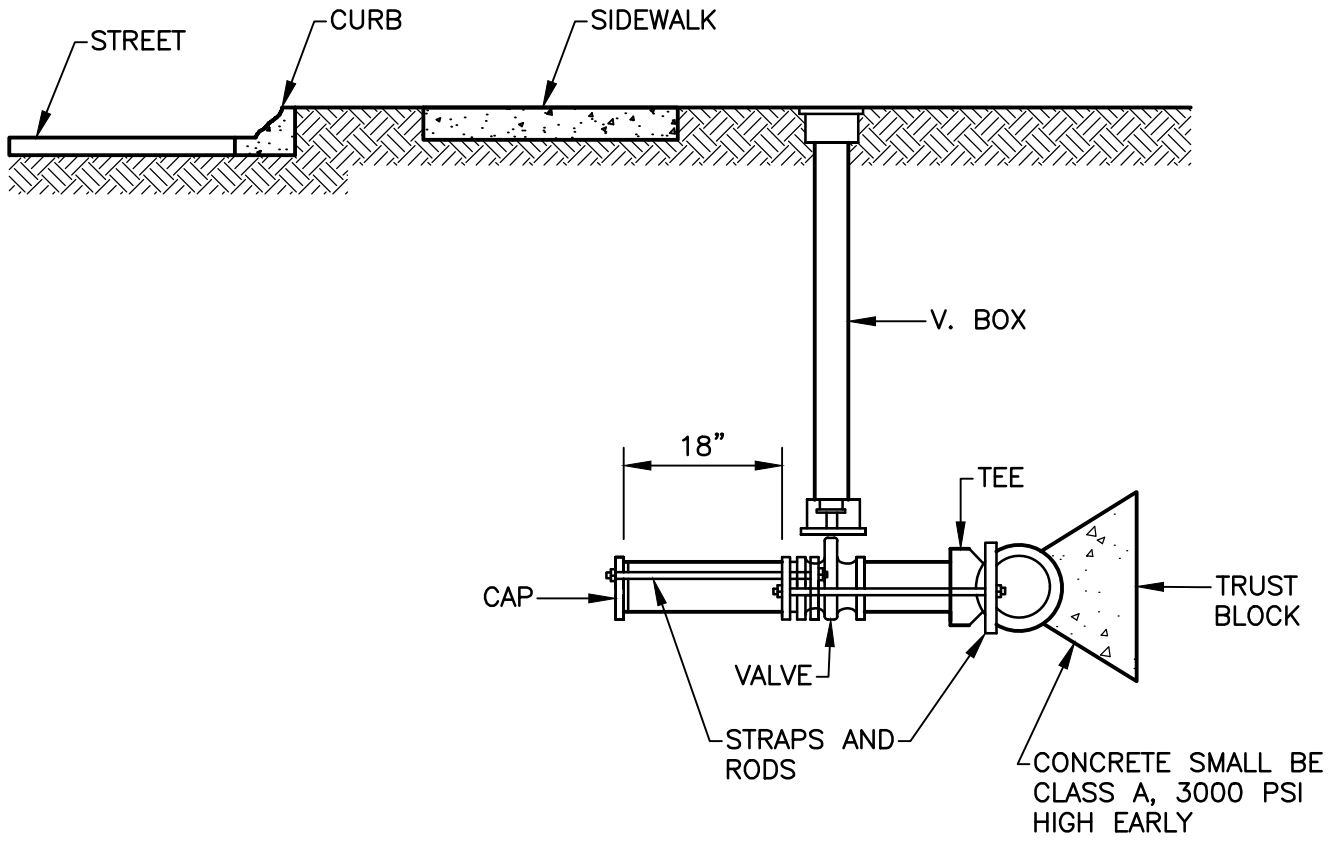

PROCEDURE FOR INSTALLING SPUDS

WHENEVER IT BECOMES NECESSARY TO SPUD OUT A LENGTH OF PIPE, FOR WHATEVER REASON, IT SHALL BE DONE IN THE FOLLOWING MANNER.

1. THE SPUD BE LAID TO THE PROPER LENGTH, PLUGGED WITH PLUG AND GASKET, THEN BRACED TO WITHSTAND THE DESIGNATED TEST PRESSURE.
2 ANY VALVES ON THE SPUD SHALL BE STRAPPED AND CLOSED.
3. A 1–INCH TAP SHALL BE MADE 12–INCHES FROM THE END OF THE SPUD.
4. ROD TO BE HIGH TENSILE, HOT ROLLED STEEL WITH TENSILE STRENTH OF 150,000 P.S.I. AND MINIMUM YIELD STRENGTH OF 130,000 P.S.I..

SPUD SIZES

TYPE SERVICE	TEE BRANCH SIZE	VALVE SIZE	STUB PIPE SIZE
3" METER	6"	6"	6"
4" METER	6"	6"	6"
6" METER	6"	6"	6"
6" DETECTOR	6"	6"	6"
8" METER	8"	8"	8"
8" DETECTOR	8"	8"	8"
12" METER	12"	12"	12"
FIRE SERVICE	AS REQUIRED		

THIS DETAIL WAS TAKEN FROM THE CITY OF ATLANTA'S WEBSITE. IT MAY HAVE BEEN MODIFIED AND SHOULD BE REVIEWED THOROUGHLY.

City of Atlanta

STANDARD DETAILS

TYPICAL SPUD INSTALLATION MAIN IN SIDEWALK

REV.
DATE: OCT. 2011
ORIG. DATE: OCT. 2004
SCALE: N.T.S.

DETAIL NO. WR–G_SP002

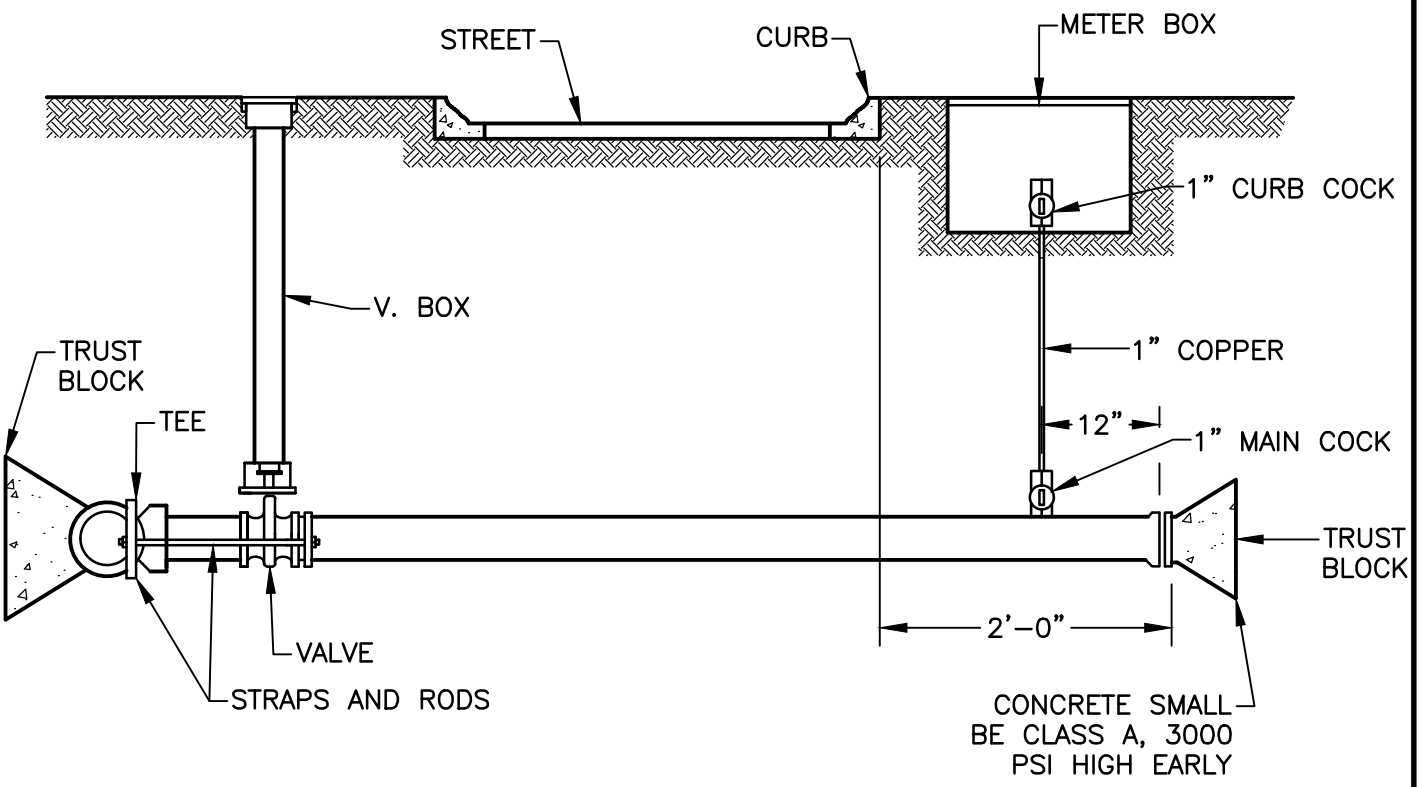

PROCEDURE FOR INSTALLING SPUDS

WHENEVER IT BECOMES NECESSARY TO SPUD OUT A LENGTH OF PIPE, FOR WHATEVER REASON, IT SHALL BE DONE IN THE FOLLOWING MANNER.

1. THE SPUD BE LAID TO THE PROPER LENGTH, PLUGGED WITH PLUG AND GASKET, THEN BRACED TO WITHSTAND THE DESIGNATED TEST PRESSURE.
2 ANY VALVES ON THE SPUD SHALL BE STRAPPED AND CLOSED.
3. A 1-INCH TAP SHALL BE MADE 12-INCHES FROM THE END OF THE SPUD.
4. ROD TO BE HIGH TENSILE, HOT ROLLED STEEL WITH TENSILE STRENTH OF 150,000 P.S.I. AND MINIMUM YIELD STRENGTH OF 130,000 P.S.I..

SPUD SIZES

TYPE SERVICE	TEE BRANCH SIZE	VALVE SIZE	STUB PIPE SIZE
3" METER	6"	6"	6"
4" METER	6"	6"	6"
6" METER	6"	6"	6"
6" DETECTOR	6"	6"	6"
8" METER	8"	8"	8"
8" DETECTOR	8"	8"	8"
12" METER	12"	12"	12"
FIRE SERVICE	AS REQUIRED		

THIS DETAIL WAS TAKEN FROM THE CITY OF ATLANTA'S WEBSITE. IT MAY HAVE BEEN MODIFIED AND SHOULD BE REVIEWED THOROUGHLY.

City of Atlanta

STANDARD DETAILS

TYPICAL SPUD INSTALLATION MAIN IN OPPOSITE SIDEWALK

REV.
DATE: OCT. 2011
ORIG. DATE: OCT. 2004
SCALE: N.T.S.

DETAIL NO. WR-G_SP003

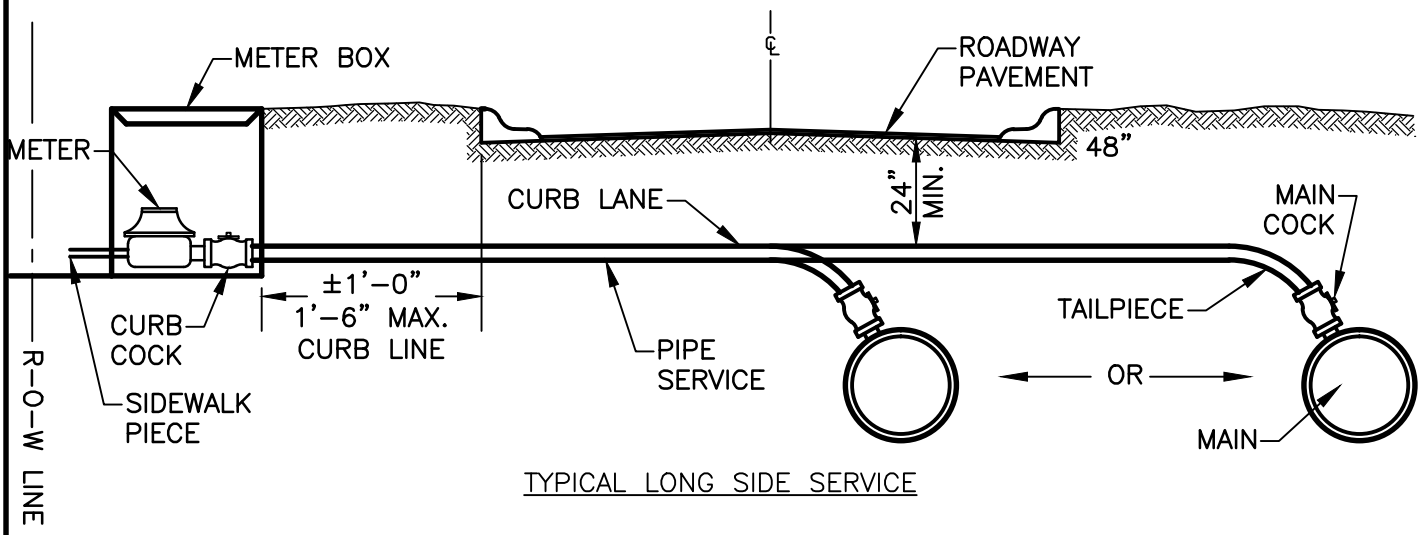

TYPICAL LONG SIDE SERVICE

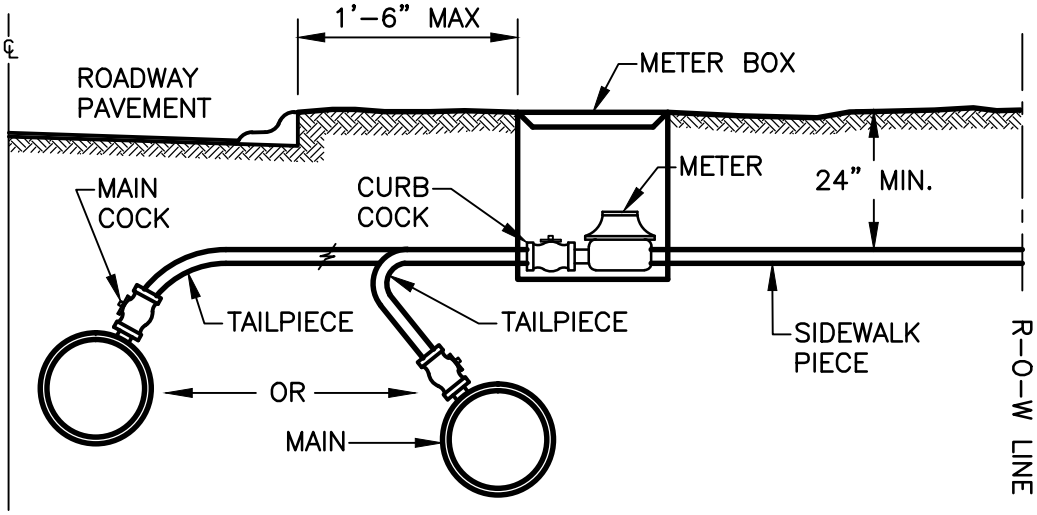

TYPICAL SHORT SIDE SERVICE

NOTES:

LONGSIDE INSTALLATION: INSTALLATION WHERE THE WATER MAIN IS ON THE OPPOSITE SIDE OF THE CENTERLINE OF THE ROADWAY FROM WHERE THE WATER METER/BOX IS TO BE SET.

SHORTSIDE INSTALLATION: INSTALLATION WHERE THE WATER MAIN IS ON THE SAME SIDE OF THE CENTERLINE OF THE ROADWAY AS WHERE THE METER IS TO BE SET.

THIS DETAIL WAS TAKEN FROM THE CITY OF ATLANTA'S WEBSITE. IT MAY HAVE BEEN MODIFIED AND SHOULD BE REVIEWED THOROUGHLY.

City of Atlanta	STANDARD DETAILS	REV. DATE: OCT. 2011 ORIG. DATE: OCT. 2004 SCALE: N.T.S.
	TYPICAL LONGSIDE & SHORTSIDE SERVICE INSTALLATION	DETAIL NO. WR-G_SV002

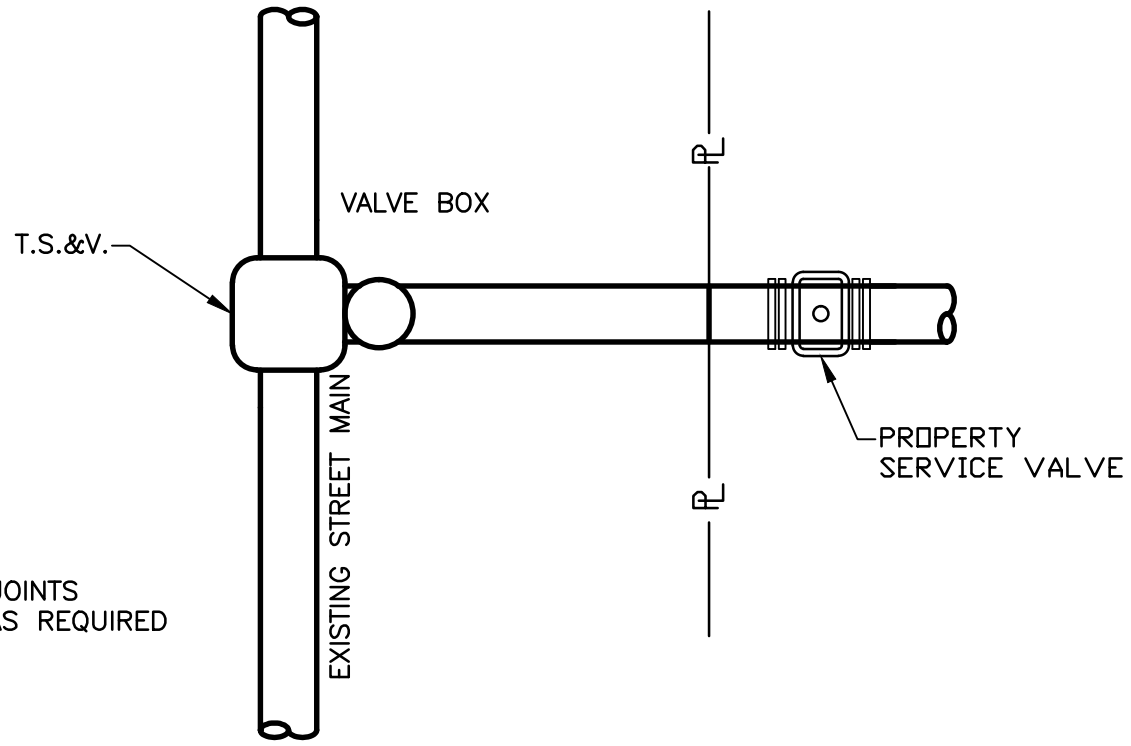

NOTE: ALL JOINTS
STRAPPED AS REQUIRED

3 THROUGH 12" FIRE SERVICE LINE

BILL OF MATERIAL
1.) T.S.&V.
2.) 1–VALVE BOX
3.) 10'–8" D.I.P. SHORT
4.) 40'–8" D.I.P. LONG

NOTE:
FOR WATER MAIN IN SIDEWALK METER MAY BE INSTALLED PARALLEL WITH WATER MAIN.

IF INSUFFICIENT AREA EXISTS WITHIN PUBLIC RIGHT–OF–WAY, A METER EASEMENT MUST BE PROVIDED.

NOTE: THIS DRAWING FOR DESIGN INFORMATION ONLY UWSA FORCES WILL INSTALL ALL DETECTORS CHECK VALVES.

THIS DETAIL WAS TAKEN FROM THE CITY OF ATLANTA'S WEBSITE. IT MAY HAVE BEEN MODIFIED AND SHOULD BE REVIEWED THOROUGHLY.

City of Atlanta	STANDARD DETAILS	REV.
	TYPICAL FIRE–SERVICE INSTALLATION	DATE: OCT. 2011 ORIG. DATE: NOV. 2004 SCALE: N.T.S.
		DETAIL NO. WR–G_SV003

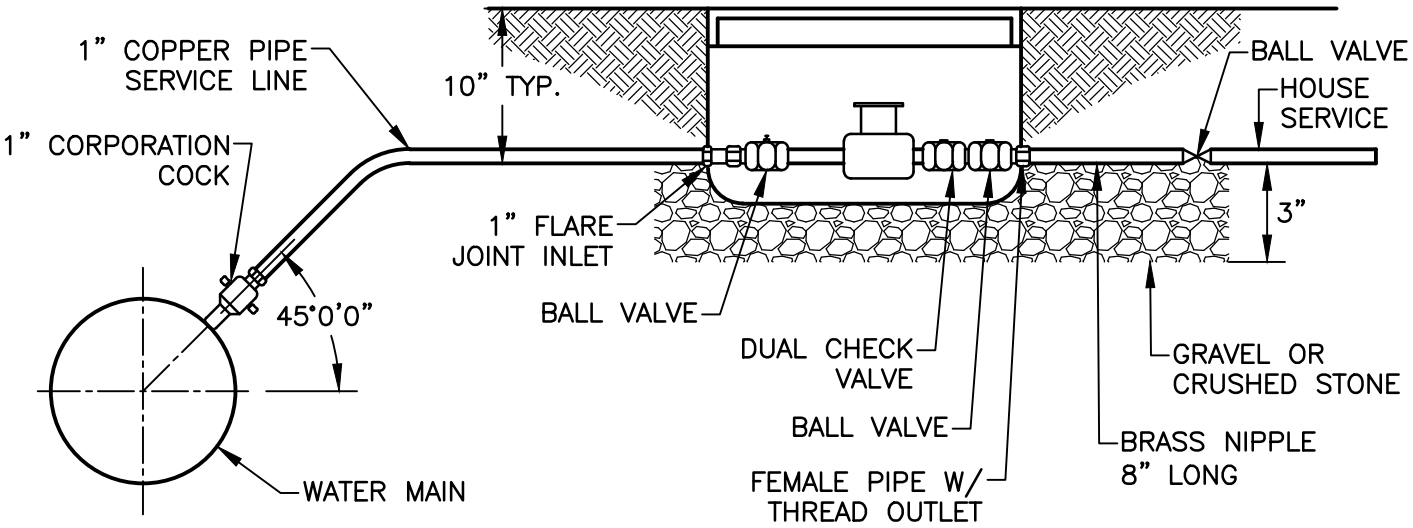

NOTE:

1. FOR 1 1/2" AND 2-INCH SERVICES, MULTIPLE 1-INCH SERVICE LINES SHALL BE PROVIDED BETWEEN WATER MAIN AND WATER METER.

2. NEW SERVICE LINE UNDER ROADWAYS SHALL BE INSTALLED IN A CASING. REPLACEMENT SERVICE LINES MAY BE INSTALLED BY FREE BORE IF EXIST SERVICE IS NOT CASING.

THIS DETAIL WAS TAKEN FROM THE CITY OF ATLANTA'S WEBSITE. IT MAY HAVE BEEN MODIFIED AND SHOULD BE REVIEWED THOROUGHLY.

City of Atlanta	STANDARD DETAILS	REV.
		DATE: OCT. 2011
	WATER SERVICE AND METER CONNECTION	ORIG. DATE: OCT. 2004
		SCALE: N.T.S.
		DETAIL NO. WR-G_SV004

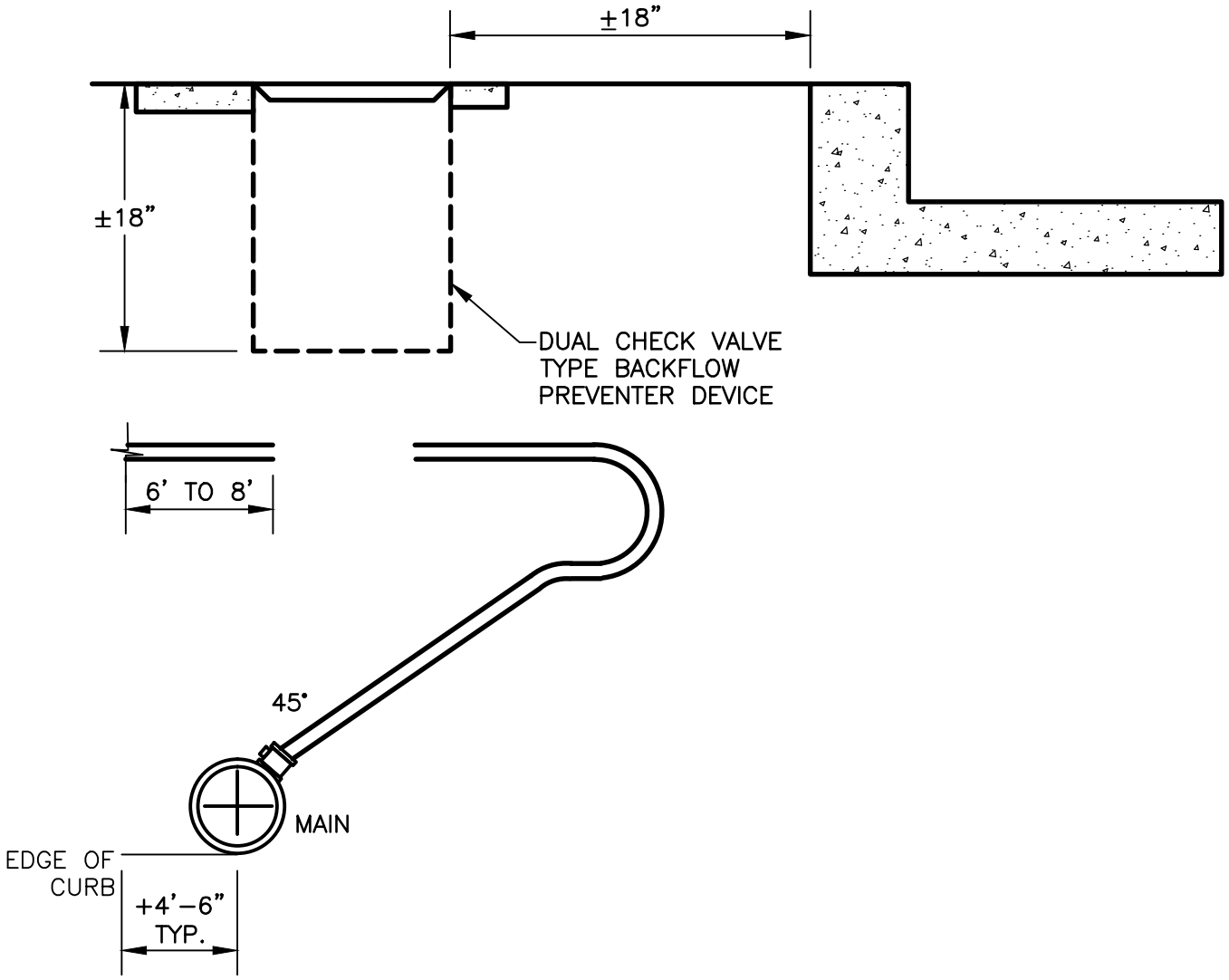

TYPICAL WATER SERVICE AND METER
CONNECTION WITH RETRO SETTERS

THIS DETAIL WAS TAKEN FROM THE CITY OF ATLANTA'S WEBSITE. IT MAY HAVE BEEN MODIFIED AND SHOULD BE REVIEWED THOROUGHLY.

City of Atlanta	STANDARD DETAILS	REV. DATE: OCT. 2011 ORIG. DATE: NOV. 2004 SCALE: N.T.S.
	TYPICAL WATER SERVICE & METER CONNECTION WITH RETRO SETTERS	DETAIL NO. WR-G_SV005

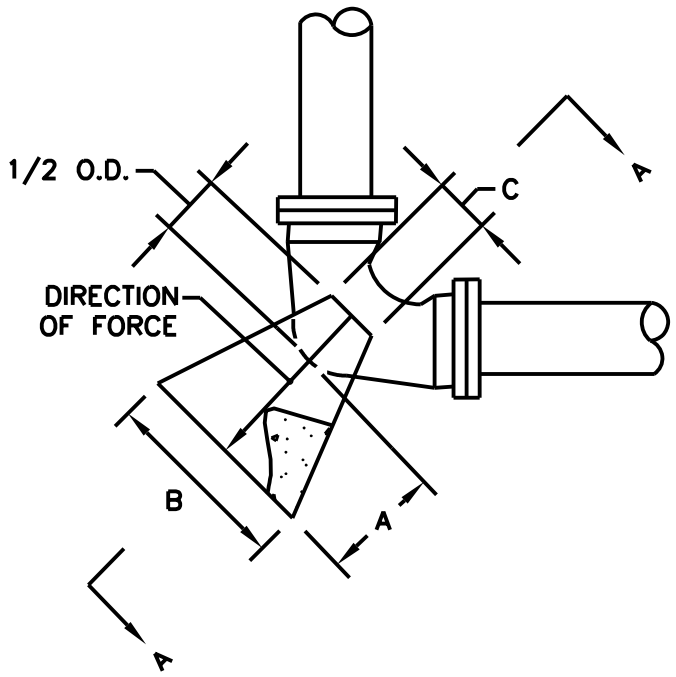

ELEVATION

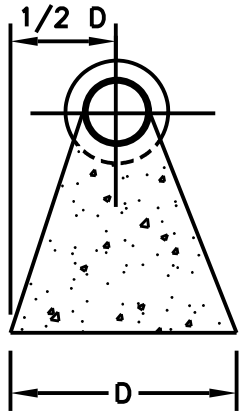

SECTION A

NOTE:
ENGINEER SHALL VERIFY SOIL CONDITION BEFORE THRUST BLOCK DESIGN IS IMPLEMENTED.

DESIGN DATA:
DIMENSION OF THRUST BLOCK IN FEET BASED ON 2000 POUNDS PER SQUARE FOOT SOIL BEARING PRESSURE AND 250 PER SQUARE INCH TEST PRESSURE. ACTUAL INSIDE DIAMETER OF DUCTILE IRON PIPE, CLASS 2 USED AS STANDARD. CONCRETE SHALL BE CLASS A,3000 P.S.I. HIGH EARLY.

MINIMUM DIMENSIONS IN FEET FOR CONCRETE BLOCKING

BEND	SIZE	A	B	C	D	VOLUME CUBIC YARD
	6"	1.0	1.0	7"	1.0	0.03
	8"	1.0	1.25	7"	1.0	0.04
11 1/4°	12"	1.0	2.0	11"	2.0	0.1
	16"	2.0	3.0	15"	2.0	0.3
	20"	2.0	3.0	19"	3.0	0.5
	24"	3.0	4.0	22"	3.0	0.8
	6"	1.0	1.5	7"	1.0	0.04
	8"	1.0	2.0	7"	2.0	0.1
22 1/2°	12"	2.0	3.0	11"	2.0	0.3
	16"	2.0	4.0	15"	3.0	0.6
	20"	3.0	5.0	19"	3.0	0.1
	24"	4.0	6.0	22"	4.0	2.3
	6"	1.5	2.0	7"	1.5	0.11
	8"	2.0	3.0	7"	2.0	0.3
45°	12"	2.0	4.0	11"	3.0	0.7
	16"	3.0	5.0	15"	4.0	1.4
	20"	4.0	6.0	19"	5.0	2.8
	24"	5.0	8.0	22"	6.0	5.0

BEND	SIZE	A	B	C	D	VOLUME CUBIC YARD
	6"	1.75	2.5	7"	2.0	0.2
	8"	2.0	3.0	7"	3.0	0.4
90°	12"	4.0	6.0	11"	4.0	2.1
	16"	4.0	7.0	15"	5.0	3.1
	20"	5.0	8.0	19"	7.0	5.3
	24"	6.0	10.0	22"	8.0	10.5
	6"	1.5	2.0	7"	1.75	0.13
TEES	8"	2.0	3.0	7"	2.0	0.3
AND	12"	2.0	4.0	11"	4.0	0.8
PLUGS	16"	4.0	5.0	15"	5.0	1.8
	20"	2.0	7.0	19"	6.0	3.9
	24"	2.0	8.0	22"	7.0	5.5

THIS DETAIL WAS TAKEN FROM THE CITY OF ATLANTA'S WEBSITE. IT MAY HAVE BEEN MODIFIED AND SHOULD BE REVIEWED THOROUGHLY.

City of Atlanta

STANDARD DETAILS

TYPICAL DOWNWARD THRUST BLOCK

REV.
DATE: OCT. 2011
ORIG. DATE: NOV. 2004
SCALE: N.T.S.

DETAIL NO. WR-G_TH004

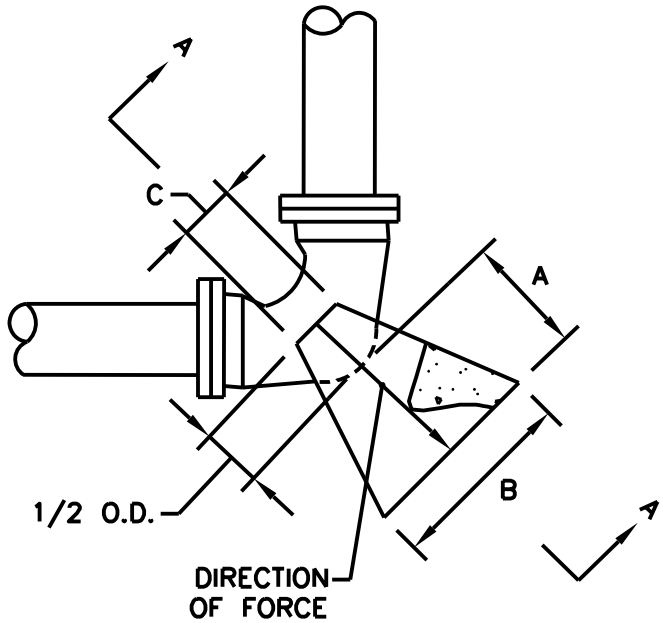

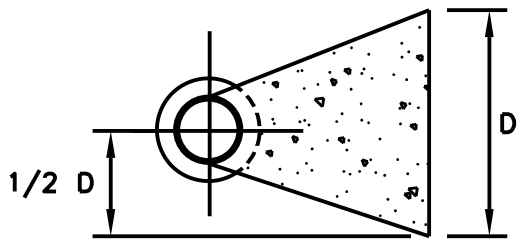

SECTION A

NOTE:
ENGINEER SHALL VERIFY SOIL CONDITION BEFORE THRUST BLOCK DESIGN IS IMPLEMENTED.

DESIGN DATA:
DIMENSION OF THRUST BLOCK IN FEET BASED ON 2000 POUNDS PER SQUARE FOOT SOIL BEARING PRESSURE AND 250 PER SQUARE INCH TEST PRESSURE. ACTUAL INSIDE DIAMETER OF DUCTILE IRON PIPE, CLASS 2 USED AS STANDARD. CONCRETE SHALL BE CLASS A,3000 P.S.I. HIGH EARLY.

MINIMUM DIMENSIONS IN FEET FOR CONCRETE BLOCKING

BEND	SIZE	A	B	C	D	VOLUME CUBIC YARD
	6"	1.0	1.0	7"	1.0	0.03
	8"	1.0	1.25	7"	1.0	0.04
11 1/4°	12"	1.0	2.0	11"	2.0	0.1
	16"	2.0	3.0	15"	2.0	0.3
	20"	2.0	3.0	19"	3.0	0.5
	24"	3.0	4.0	22"	3.0	0.8
	6"	1.0	1.5	7"	1.0	0.04
	8"	1.0	2.0	7"	2.0	0.1
22 1/2°	12"	2.0	3.0	11"	2.0	0.3
	16"	2.0	4.0	15"	3.0	0.6
	20"	3.0	5.0	19"	3.0	0.1
	24"	4.0	6.0	22"	4.0	2.3
	6"	1.5	2.0	7"	1.5	0.11
	8"	2.0	3.0	7"	2.0	0.3
45°	12"	2.0	4.0	11"	3.0	0.7
	16"	3.0	5.0	15"	4.0	1.4
	20"	4.0	6.0	19"	5.0	2.8
	24"	5.0	8.0	22"	6.0	5.0

BEND	SIZE	A	B	C	D	VOLUME CUBIC YARD
	6"	1.75	2.5	7"	2.0	0.2
	8"	2.0	3.0	7"	3.0	0.4
90°	12"	4.0	6.0	11"	4.0	2.1
	16"	4.0	7.0	15"	5.0	3.1
	20"	5.0	8.0	19"	7.0	5.3
	24"	6.0	10.0	22"	8.0	10.5
	6"	1.5	2.0	7"	1.75	0.13
TEES	8"	2.0	3.0	7"	2.0	0.3
AND	12"	2.0	4.0	11"	4.0	0.8
PLUGS	16"	4.0	5.0	15"	5.0	1.8
	20"	2.0	7.0	19"	6.0	3.9
	24"	2.0	8.0	22"	7.0	5.5

THIS DETAIL WAS TAKEN FROM THE CITY OF ATLANTA'S WEBSITE. IT MAY HAVE BEEN MODIFIED AND SHOULD BE REVIEWED THOROUGHLY.

City of Atlanta

STANDARD DETAILS

TYPICAL HORIZONTAL THRUST BLOCK

REV.
DATE: OCT. 2011
ORIG. DATE: NOV. 2004
SCALE: N.T.S.

DETAIL NO. WR-G_TH005

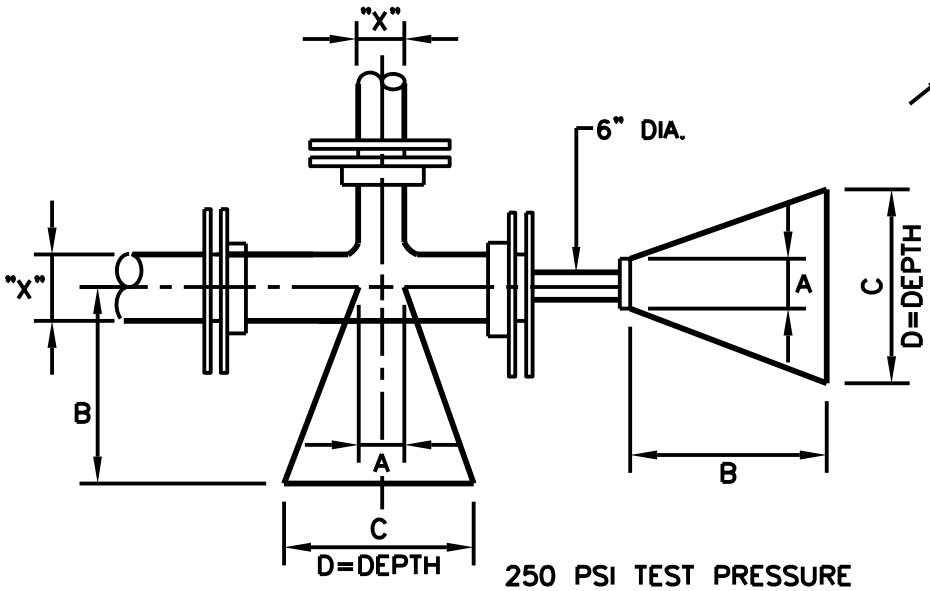

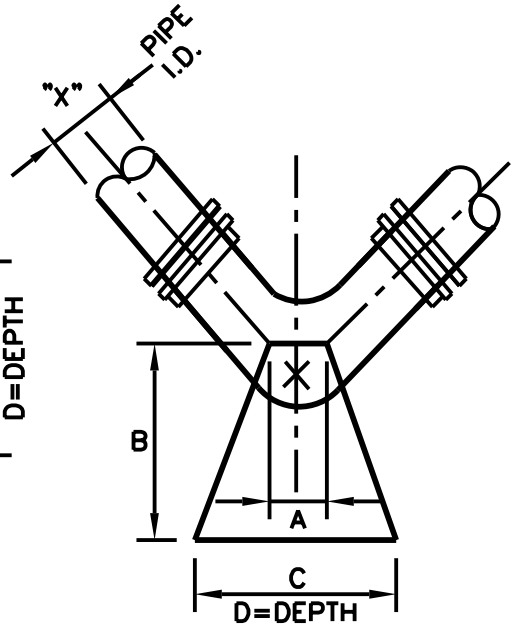

250 PSI TEST PRESSURE
2,500 PSF SOIL BEARING

BLOCKING DIMENSIONS		X*	A	B	C	D
DEAD END & TEES		24"	2'-0"	4'-6"	14.0'	7.0'
		20"	1'-8"	3'-9"	11.7'	5.9'
		16"	1'-3"	3'-3"	9.5'	4.7'
		12"	1'-0"	2'-6"	7.1'	3.6'
		10"	1'-0"	2'-0"	6.0'	3.0'
		8"	0'-10"	1'-9"	4.9'	2.5'
		6"	0'-8"	1'-3"	3.7'	1.8'
BENDS	90°	24"	2'-0"	5'-9"	16.7'	8.3'
		20"	1'-8"	4'-9"	13.9'	7.0'
		16"	1'-3"	4'-0"	15.9'	5.6'
		12	1'-0"	3'-0"	8.5'	4.3'
		10"	1'-0"	2'-6"	7.1'	3.6'
		8"	0'-10"	2'-0"	5.9'	2.9'
		6"	0'-8"	1'-6"	4.4'	2.2'
	45°	24"	2'-0"	4'-0"	12.2'	6.1'
		20"	1'-8"	3'-3"	10.2'	5.1'
		16"	1'-3"	2'-9"	8.2'	4.1'
		12	1'-0"	2'-0"	6.2'	3.1'
		10"	1'-0"	1'-9"	5.3'	2.6'
		8"	0'-10"	1'-6"	4.3'	2.2'
		6"	0'-10"	1'-3"	3.2'	1.6'

BLOCKING DIMENSIONS		X*	A	B	C	D
BENDS	22 1/2°	24"	2'-0"	2'-6"	8.8'	4.4'
		20"	1'-8"	2'-0"	7.4'	3.7'
		16"	1'-3"	1'-9"	5.9'	2.9'
		12"	1'-0"	1'-3"	4.5'	2.3'
		10"	1'-0"	1'-3"	3.8'	1.9'
		8"	0'-10"	1'-0"	3.1'	1.6'
		6"	0'-8"	0'-9"	2.3'	1.2'
	11 1/4°	24"	2'-0"	1'-6"	6.2'	3.1'
		20"	1'-8"	1'-3"	5.2'	2.6'
		16"	1'-3"	1'-0"	4.2'	2.1'
		12	1'-0"	0'-9"	3.1'	1.6'
		10"	1'-0"	0'-9"	2.7'	1.4'
		8"	0'-10"	0'-6"	2.1'	1.1'
		6"	0'-8"	0'-6"	1.4'	1.0'

X*= DIAMETER OF PIPE TO BE BLOCKED

NOTE: BLOCKING FOR LARGER DIAMETER PIPE SHALL BE DETERMINED FOR EACH PROJECT.

THIS DETAIL WAS TAKEN FROM THE CITY OF ATLANTA'S WEBSITE. IT MAY HAVE BEEN MODIFIED AND SHOULD BE REVIEWED THOROUGHLY.

City of Atlanta

STANDARD DETAILS

TYPICAL BLOCKING

REV.
DATE: OCT. 2011
ORIG. DATE: OCT. 2004
SCALE: N.T.S.

DETAIL NO. WR-G_TH006

TAP CUTS

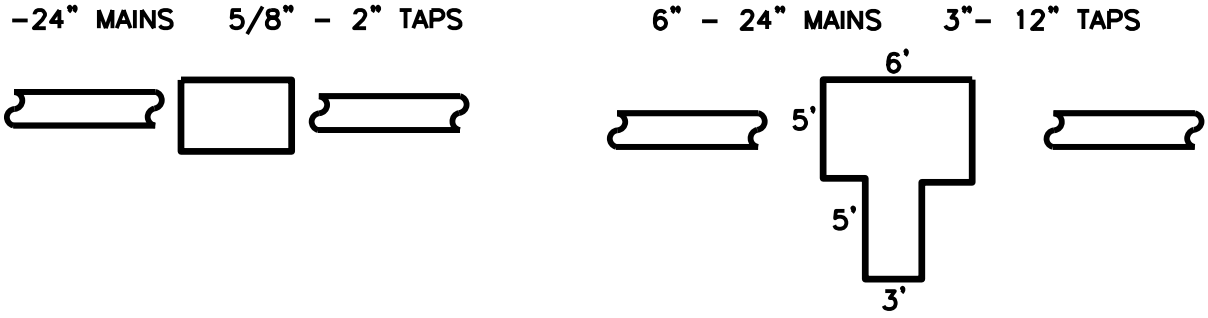

METER CUTS

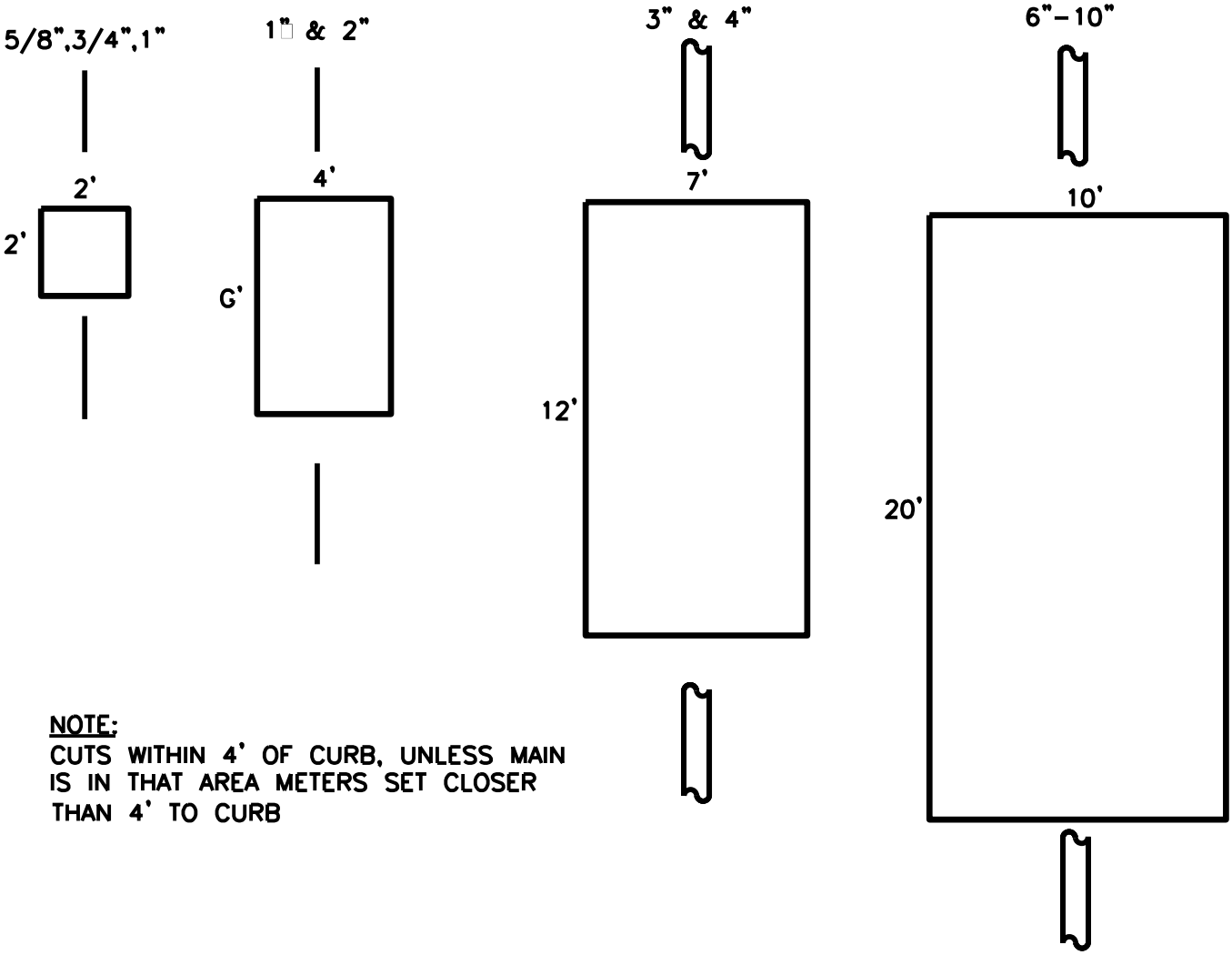

NOTE:
CUTS WITHIN 4' OF CURB, UNLESS MAIN IS IN THAT AREA METERS SET CLOSER THAN 4' TO CURB

TYPICAL CUTS FOR STATE HIGHWAY PERMITS

THIS DETAIL WAS TAKEN FROM THE CITY OF ATLANTA'S WEBSITE. IT MAY HAVE BEEN MODIFIED AND SHOULD BE REVIEWED THOROUGHLY.

City of Atlanta	STANDARD DETAILS	REV. DATE: OCT. 2011 ORIG. DATE: NOV. 2004 SCALE: N.T.S.
	TYPICAL CUTS FOR STATE HIGHWAY PERMITS	DETAIL NO. WR-G_TP001

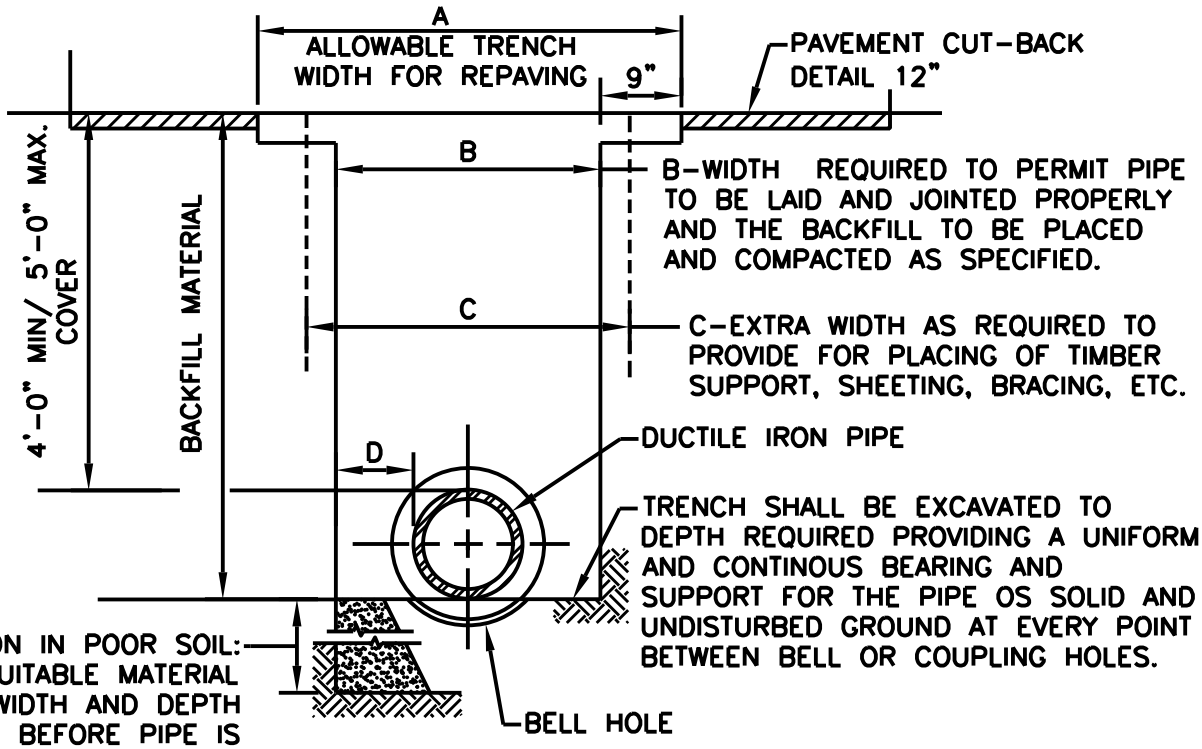

PIPE SIZE (NOMIANAL)	A (MAXIMUM) EARTH/ROCK	B (MAXIMUM) EARTH/ROCK	C	D MIN./MAX.
6"	3.50'/4.00'	2.00'/2.50'	AS REQ'D	9"/12"
8"	3.50'/4.00'	2.00'/2.50'	"	9"/12"
12"	4.00'/4.50'	2.50'/3.00'	"	9"/12"
16"	4.50'/5.00'	3.00'/3.50'	"	9"/12"
20"	4.50'/5.00'	3.00'/3.50'	"	9"/12"
24"	5.00'/5.50'	3.50'/4.00'	"	9"/12"
30"	5.50'/6.00'	4.00'/4.50'	"	9"/12"
36"	6.00'/6.50'	4.50'/5.00'	"	9"/12"
48"	7.00'/7.50'	5.50'/6.00'	"	9"/12"

NOTES:

1. COMPACTION: BACKFILLS SHALL BE BUILT UP IN LAYERS AND EACH LAYER SHALL BE THOROUGHLY COMPACTED BEFORE BEGINNING ANOTHER LAYER. LAYERS SHALL BE NO MORE THAN 12-INCHES IN DEPTH, PUDDLING WILL NOT BE PERMITTED, NOR WILL FROZEN OR WET MATERIAL BE PLACED IN TRENCHES.
2. COMPACTION STANDARDS: ALL BACKFILL MATERIALS USED SHALL CONTAIN A SUFFICIENT AMOUNT OF MOISTURE FOR PROPER COMPACTION, AND THESE MATERIALS SMALL BE COMPACTED AT NOT LESS THAN 98% OF THEIR OPTIMUM COMPACTION FOR ANY SPECIFIC SOIL CLASSIFICATION. AS DETERMINED BY THE STANDARD PROCTOR TEST, ASTM D698.
3. COMPACTION TEST: COMPACTION TEST WILL BE REQUIRED IN EXISTING OR PROPOSED STREETS, SIDEWALKS, DRIVES AND OTHER EXISTING OR PROPOSED PAVED AREAS AT VARYING DEPTHS AND AT INTERVALS AS DETERMINED BY THE ENGINEER WITH A MINIMUM OF ONE TEST ON EACH JOB, AND A MAXIMUM OF ONE REQUIRED TEST FOR 400 FEET OF LESS OF WATER MAIN CONSTRUCTION, UNLESS SOIL CONDITIONS OR CONSTRUCTION PRACTICES, IN THE OPINION OF THE ENGINEER, WARRANT THE NEED FOR ADDITIONAL TESTS.

THIS DETAIL WAS TAKEN FROM THE CITY OF ATLANTA'S WEBSITE. IT MAY HAVE BEEN MODIFIED AND SHOULD BE REVIEWED THOROUGHLY.

City of Atlanta

STANDARD DETAILS

TYPICAL WATERLINE TRENCH SECTION

REV.
DATE: OCT. 2011
ORIG. DATE: OCT. 2004
SCALE: N.T.S.

DETAIL NO. WR-G_TR001

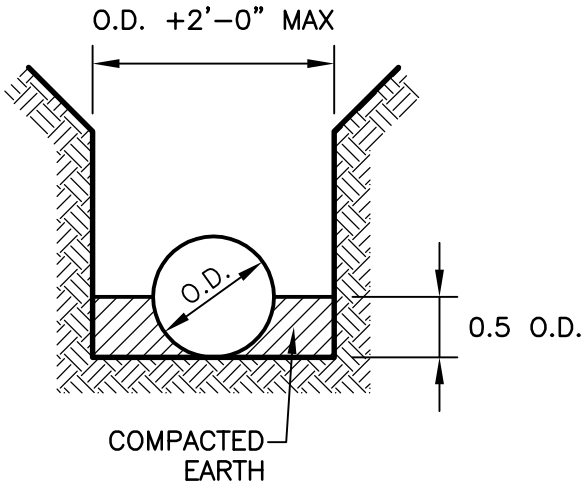

TYPE 2
FOR RIGID

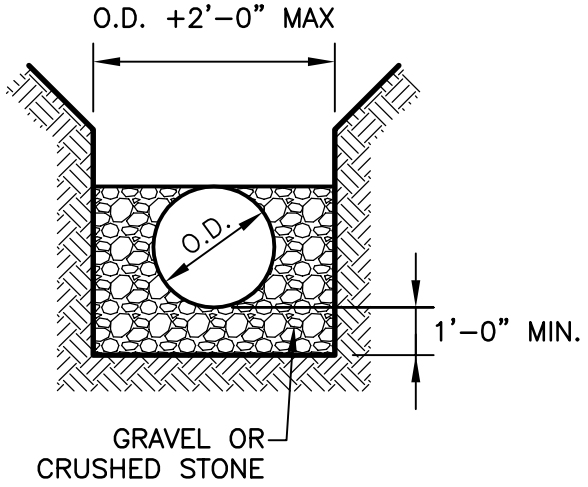

TYPE 5
FOR FLEXIBLE

THIS DETAIL WAS TAKEN FROM THE CITY OF ATLANTA'S WEBSITE. IT MAY HAVE BEEN MODIFIED AND SHOULD BE REVIEWED THOROUGHLY.

City of Atlanta	STANDARD DETAILS	REV. DATE: OCT. 2011 ORIG. DATE: OCT. 2004 SCALE: N.T.S.
	TYPICAL WATER MAIN BEDDING & HAUNCHING	DETAIL NO. WR–G_TR002

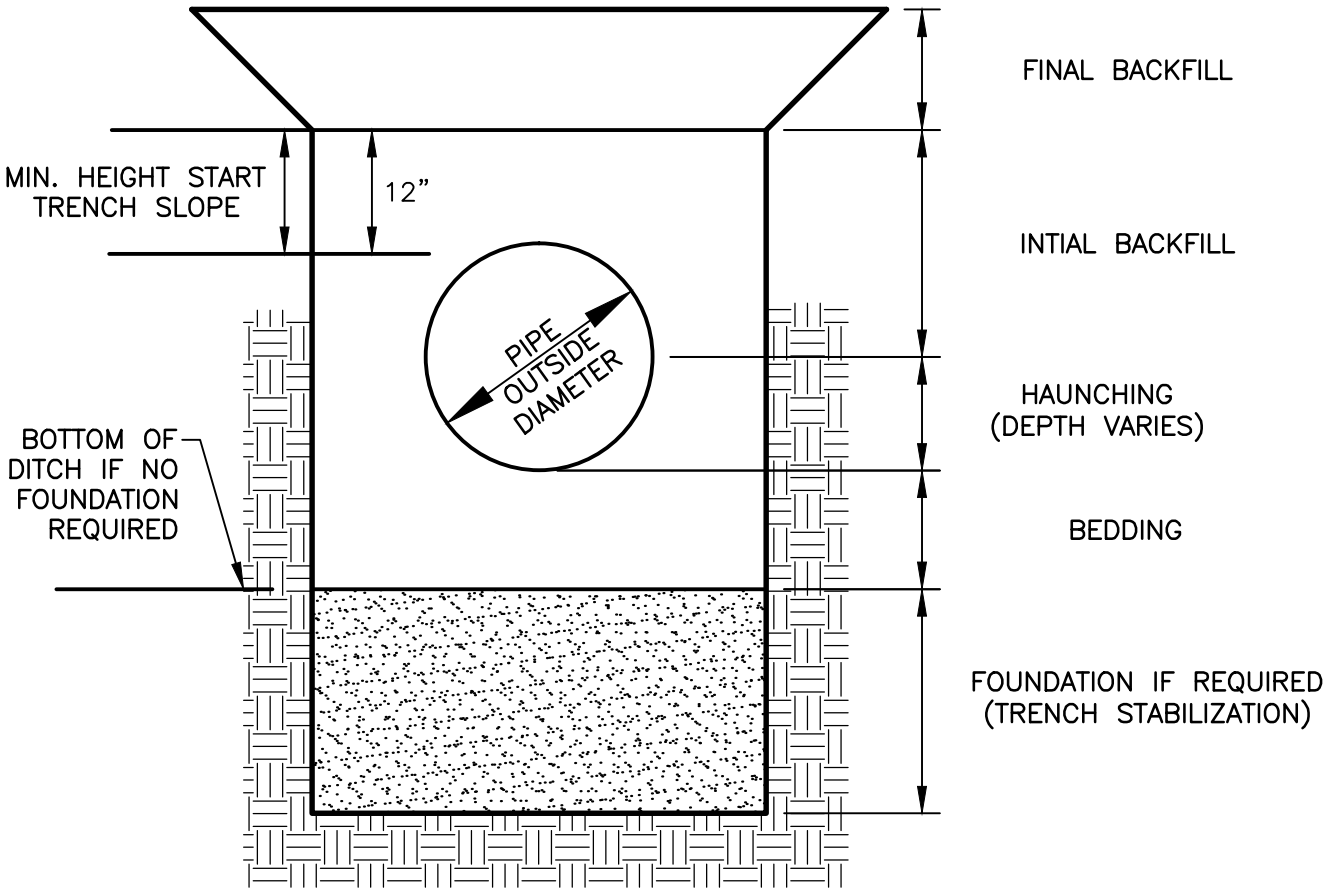

THIS DETAIL WAS TAKEN FROM THE CITY OF ATLANTA'S WEBSITE. IT MAY HAVE BEEN MODIFIED AND SHOULD BE REVIEWED THOROUGHLY.

City of Atlanta	STANDARD DETAILS	REV. DATE: OCT. 2011 ORIG. DATE: OCT. 2004 SCALE: N.T.S.
	TRENCH TERMINOLOGY	DETAIL NO. WR–G_TR003

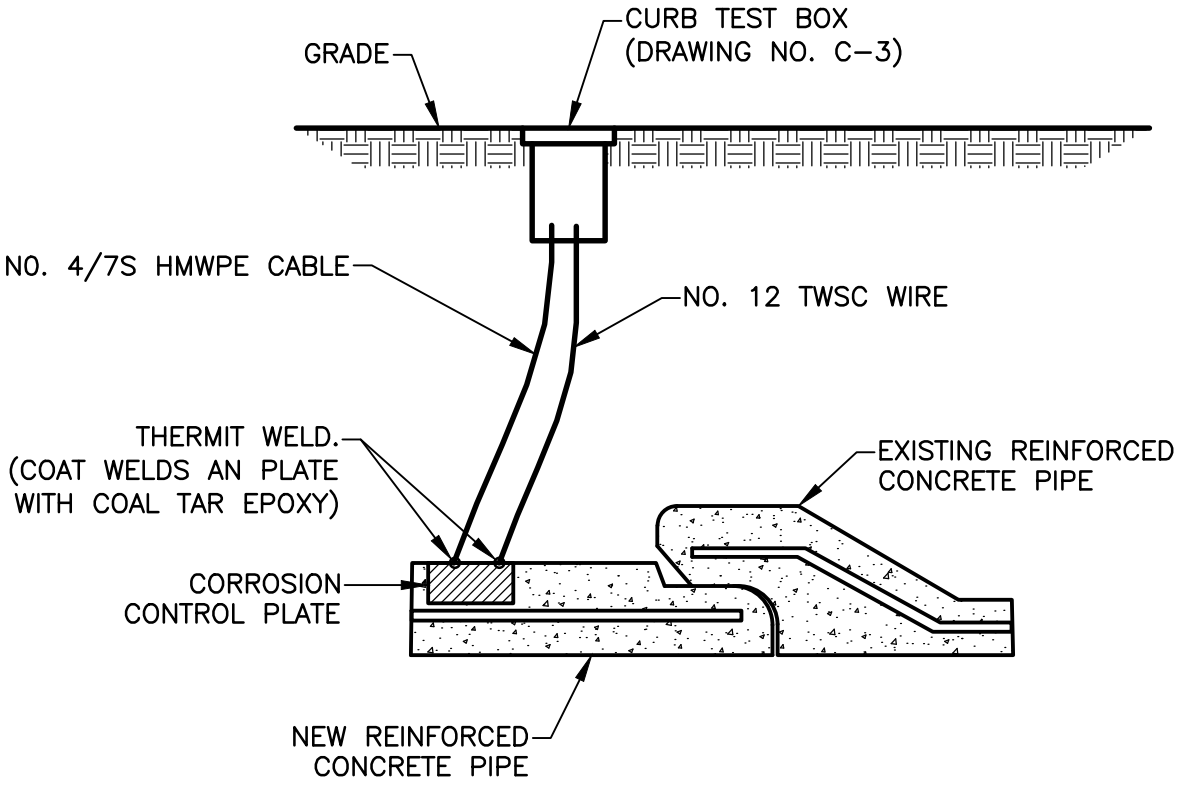

TEST STATION AT THE JUNCTION OF NEW AND EXISTING REINFORCED CONCRETE PIPE

THIS DETAIL WAS TAKEN FROM THE CITY OF ATLANTA'S WEBSITE. IT MAY HAVE BEEN MODIFIED AND SHOULD BE REVIEWED THOROUGHLY.

City of Atlanta	STANDARD DETAILS	REV. DATE: OCT. 2011 ORIG. DATE: OCT. 2004 SCALE: N.T.S.
	TYPICAL TEST STATION AT THE JUNCTION OF NEW & EXISTING RC PIPE	DETAIL NO. WR-G_TS002

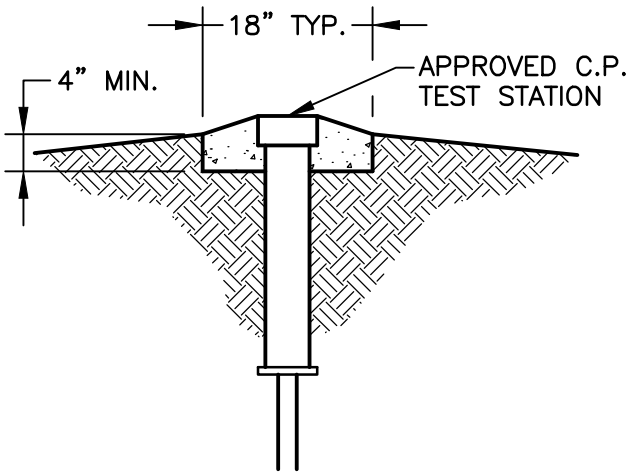

DETAIL "B"
UNPAVED SIDEWALK AREA

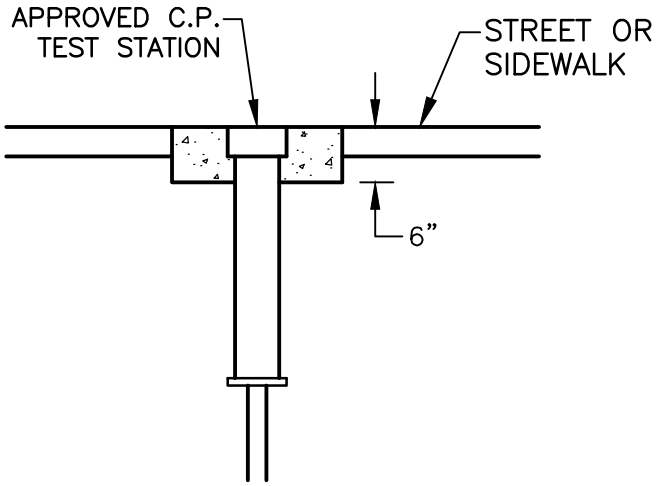

DETAIL "C"
PAVED STREET OR SIDEWALK AREA

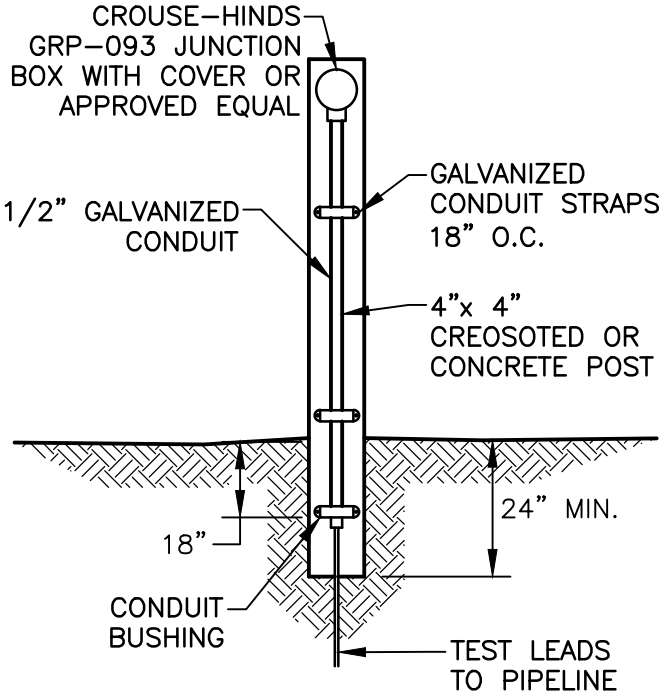

DETAIL "A"
OPEN FIELD AREA

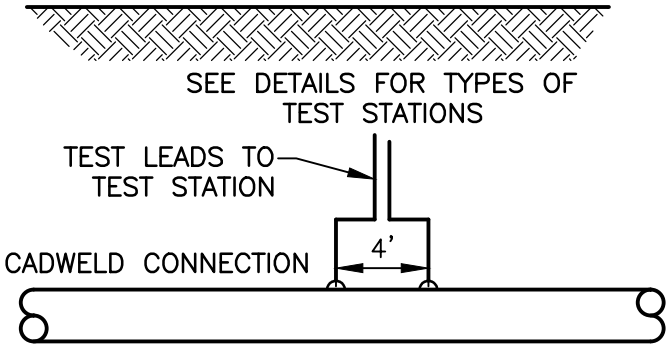

PIPELINE

NOTE:

1. ALL TEST STATION TERMINAL BOARDS TO HAVE 7 TERMINALS.
2. ALL WIRES TO BE MINIMUM 12 AWG COPPER, SINGLE CONDUCTOR, HMWPE, SPECIFICALLY DESIGNED FOR CATHODIC PROTECTION SERVICE.
3. CARE TO BE TAKEN DURING BACKFILLING TO PREVENT DAMAGE TO C.P. WIRES.

THIS DETAIL WAS TAKEN FROM THE CITY OF ATLANTA'S WEBSITE. IT MAY HAVE BEEN MODIFIED AND SHOULD BE REVIEWED THOROUGHLY.

City of Atlanta	STANDARD DETAILS	REV. DATE: OCT. 2011 ORIG. DATE: OCT. 2004 SCALE: N.T.S.
	TYPICAL PIPELINE TEST STATION	DETAIL NO. WR-G_TS003

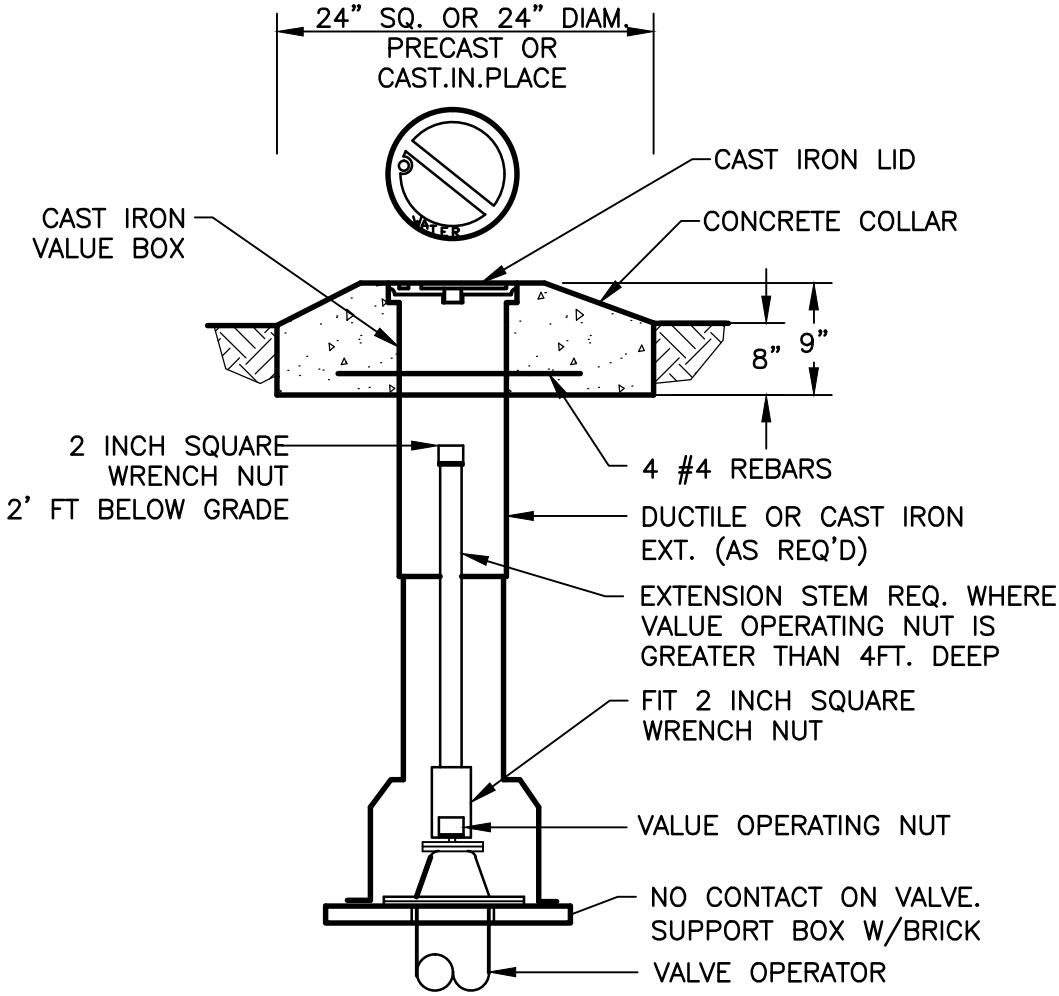

THIS DETAIL WAS TAKEN FROM THE CITY OF ATLANTA'S WEBSITE. IT MAY HAVE BEEN MODIFIED AND SHOULD BE REVIEWED THOROUGHLY.

City of Atlanta	STANDARD DETAILS	REV. DATE: OCT. 2011 ORIG. DATE: NOV. 2004 SCALE: N.T.S.
	TYPICAL UNDERGROUND VALVE BOX	DETAIL NO. WR–G_VB001

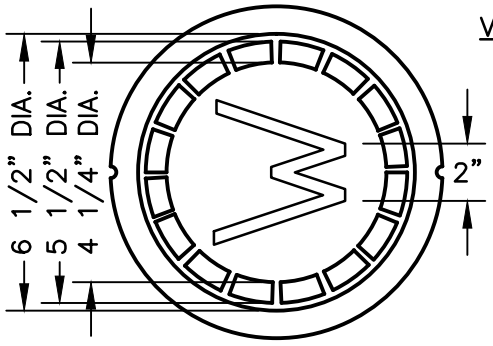

PLAN

VALVE BOX COVER

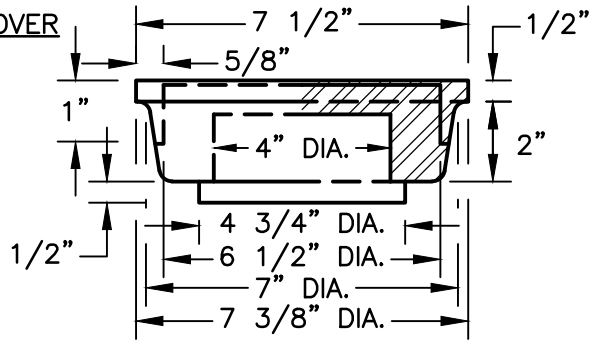

SECTION

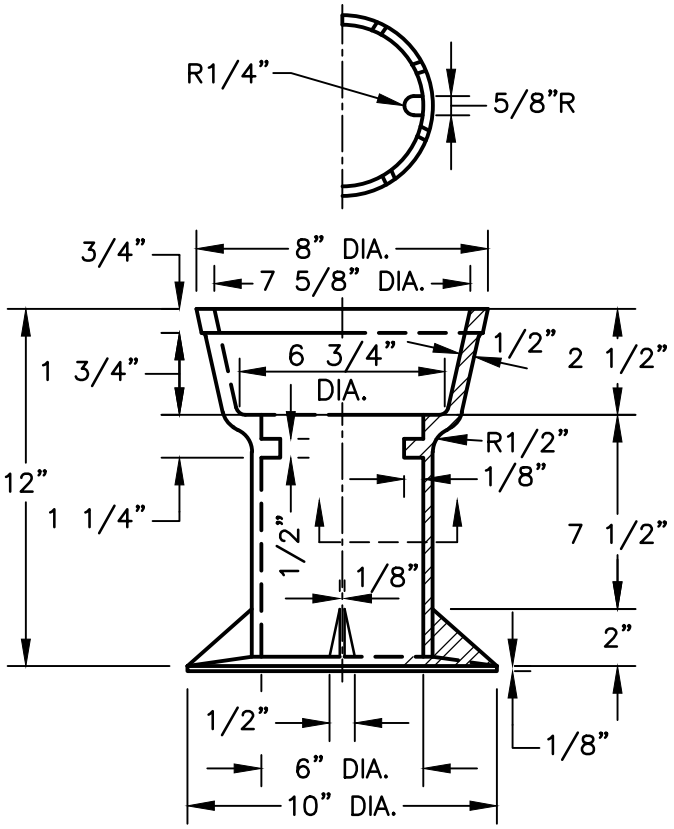

VALVE BOX
SPECIAL TOP SECTION

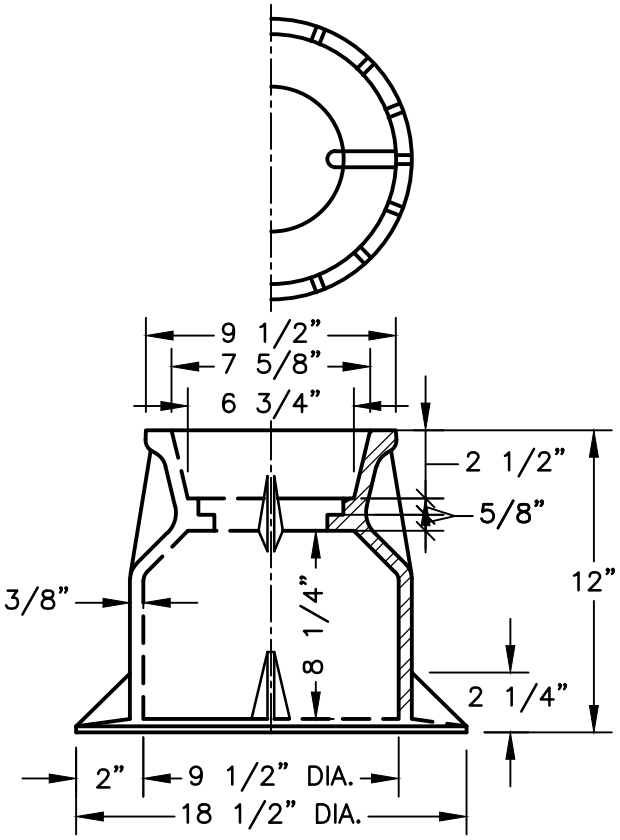

VALVE BOX
STANDARD TOP SECTION

NOTES:

1. UNLESS NOTED OTHERWISE, CAST IRON SHALL CONFORM TO A.S.T.M. SPECIFICATIONS A48 LATEST REVISION FOR CLASS 20 GREY IRON CASTINGS.
2. CASTING SHALL BE TRUE AND FREE OF HOLES. THEY SHALL BE CLEANED ACCORDING TO GOOD FOUNDRY PRACTICE, CHIPPED AND GROUND AS NEEDED TO REMOVE FINS AND ROUGH PLACES.
3. FINISHED CASTING SHALL BE COATED INSIDE AND OUTSIDE WITH COAL TAR PITCH VARNISH AS INDICATED IN A.W.W.A. SPECIFICATIONS C110 LATEST REVISION. COATING MAY BE APPLIED COLD AND SHALL THOROUGHLY COVER ALL METAL SURFACES. FINISHED COATING SHALL BE SMOOTH, GLOSSY NOT BRITTLE WHEN COLD, NOT STICKY WHEN EXPOSED TO THE SUN, AND SHALL ADHERE TO THE METAL AT ALL TEMPERATURES.
4. WHEN COATING IS COMPLETE, LID SHALL FIT SNUGLY WITHOUT ROCKING.

THIS DETAIL WAS TAKEN FROM THE CITY OF ATLANTA'S WEBSITE. IT MAY HAVE BEEN MODIFIED AND SHOULD BE REVIEWED THOROUGHLY.

City of Atlanta	STANDARD DETAILS	REV. DATE: OCT. 2011 ORIG. DATE: OCT. 2004 SCALE: N.T.S.
	TYPICAL 4"–12" VALVE BOX ASSEMBLIES	DETAIL NO. WR–G_VB002

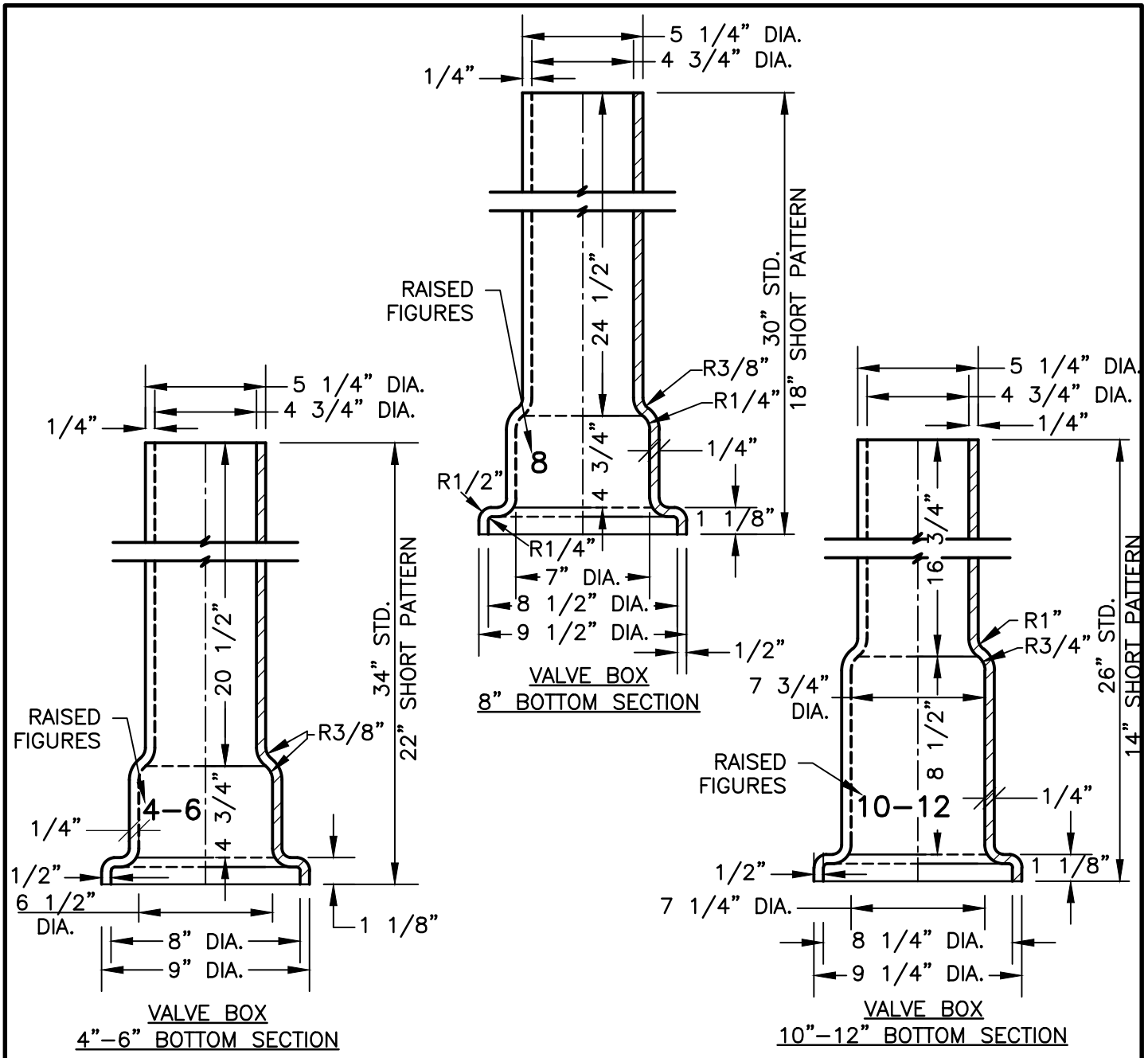

NOTES:

1. UNLESS NOTED OTHERWISE, CAST IRON SHALL CONFORM TO A.S.T.M. SPECIFICATIONS A48 LATEST REVISION FOR CLASS 20 GREY IRON CASTINGS.
2. CASTING SHALL BE TRUE AND FREE OF HOLES. THEY SHALL BE CLEANED ACCORDING TO GOOD FOUNDRY PRACTICE, CHIPPED AND GROUND AS NEEDED TO REMOVE FINS AND ROUGH PLACES.
3. FINISHED CASTING SHALL BE COATED INSIDE AND OUTSIDE WITH COAL TAR PITCH VARNISH AS INDICATED IN A.W.W.A. SPECIFICATIONS C110 LATEST REVISION. COATING MAY BE APPLIED COLD AND SHALL THOROUGHLY COVER ALL METAL SURFACES. FINISHED COATING SHALL BE SMOOTH, GLOSSY NOT BRITTLE WHEN COLD, NOT STICKY WHEN EXPOSED TO THE SUN, AND SHALL ADHERE TO THE METAL AT ALL TEMPERATURES.
4. WHEN COATING IS COMPLETE, LID SHALL FIT SNUGLY WITHOUT ROCKING.

THIS DETAIL WAS TAKEN FROM THE CITY OF ATLANTA'S WEBSITE. IT MAY HAVE BEEN MODIFIED AND SHOULD BE REVIEWED THOROUGHLY.

City of Atlanta	STANDARD DETAILS	REV. DATE: OCT. 2011 ORIG. DATE: OCT. 2004 SCALE: N.T.S.
	TYPICAL 4"–12" VALVE BOX ASSEMBLIES	DETAIL NO. WR–G_VB003

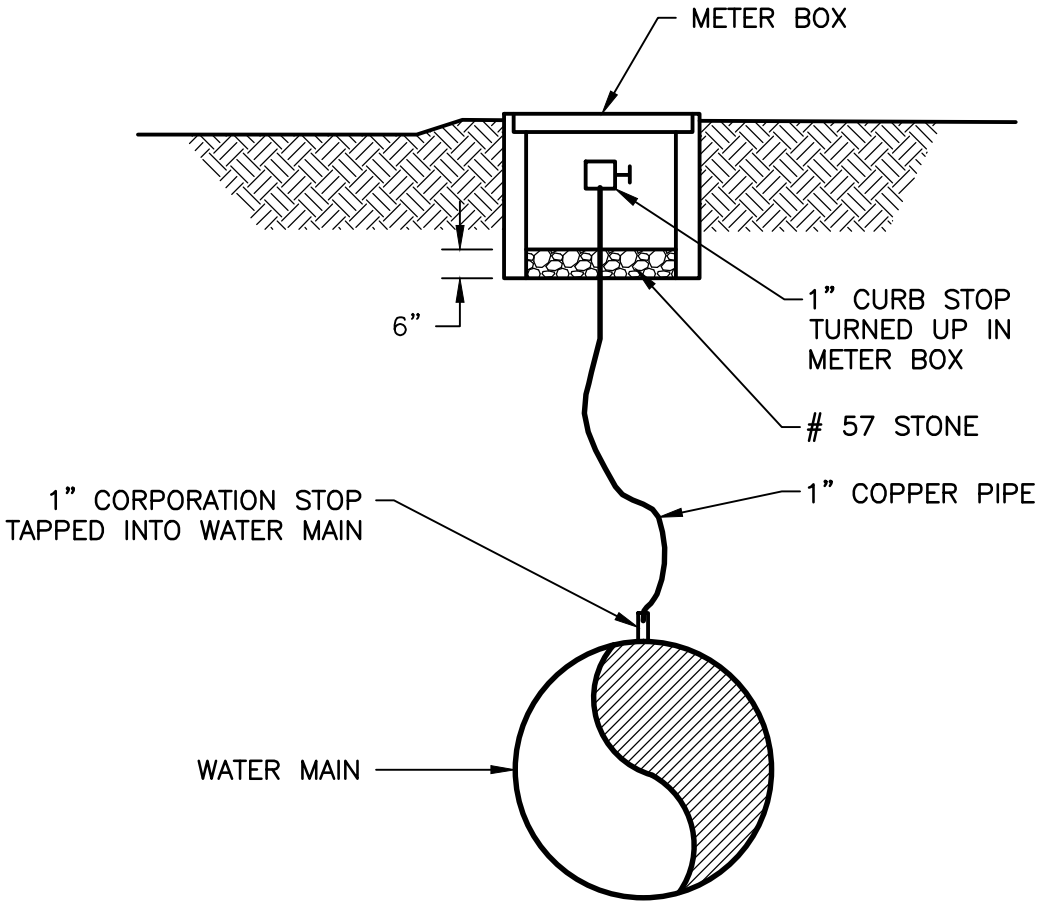

THIS DETAIL WAS TAKEN FROM THE CITY OF ATLANTA'S WEBSITE. IT MAY HAVE BEEN MODIFIED AND SHOULD BE REVIEWED THOROUGHLY.

City of Atlanta	STANDARD DETAILS	REV. DATE: OCT. 2011 ORIG. DATE: OCT. 2004 SCALE: N.T.S.
	TYPICAL MANUAL AIR VALVE	DETAIL NO. WR–G_VL001

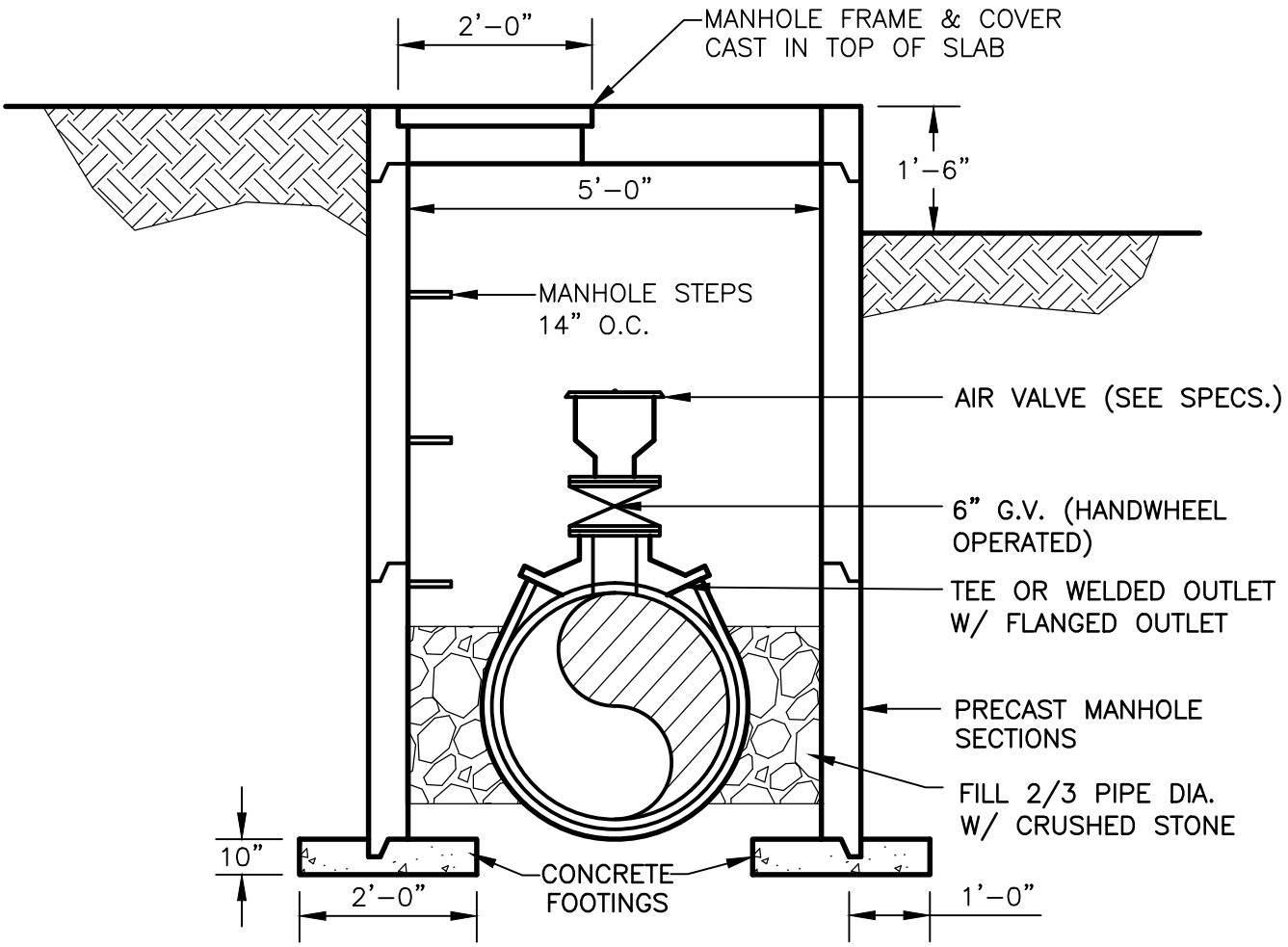

NOTE: SEAL MANHOLE OPENINGS
W/ BRICK AND MORTAR

THIS DETAIL WAS TAKEN FROM THE CITY OF ATLANTA'S WEBSITE. IT MAY HAVE BEEN MODIFIED AND SHOULD BE REVIEWED THOROUGHLY.

City of Atlanta	STANDARD DETAILS	REV. DATE: OCT. 2011 ORIG. DATE: OCT. 2004 SCALE: N.T.S.
	TYPICAL AIR VALVE AUTOMATIC	DETAIL NO. WR–G_VL002

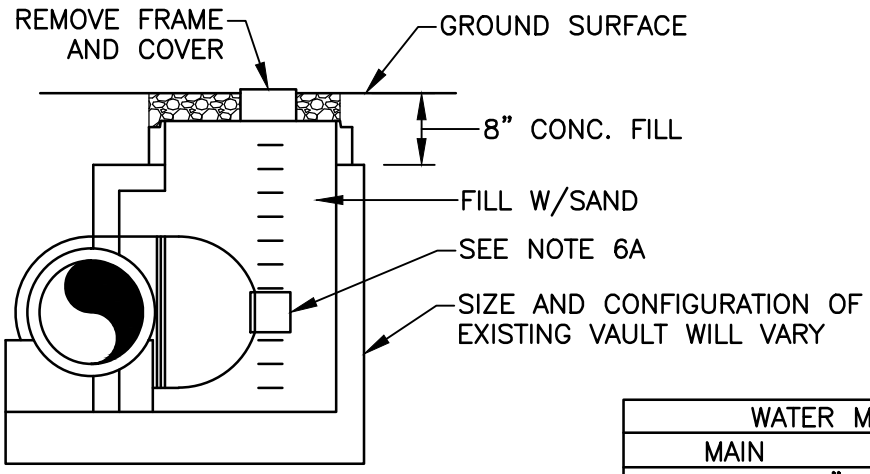

VALVE ABANDONMENT 16" AND LARGER

WATER MAIN ABANDONMENT SCHEDULE		
MAIN	SIZE	LOCATION
HEMPHILL 30"	30"	HPS YARD TO 10TH STREET
HEMPHILL 30"	36"	HPS YARD TO 10TH STREET
CURRENT STREET	30"	HPS YARD TO 10TH STREET

WATER MAIN AND VALVE ABANDONMENT

1. ALL VALVE AND ACCESS VAULTS ON MAINS TO BE ABANDONED ARE TO BE ABANDONED PER THIS DETAIL.

2. SEE MAIN ABANDONMENT SCHEDULE THIS DETAIL FOR MAINS TO BE ABANDONED.

3. COORDINATE VALVE CLOSURE AND ABANDONMENT W/ENGINEER.

4. VALVES SMALLER THAN 16":
   A. REMOVE VALVE BOX TO 3' MIN. BELOW GROUND SURFACE.
   B. FILL HOLE WITH CONCRETE TO GROUND SURFACE IN PAVEMENT.

5. VALVES OUTSIDE OF PAVED AREAS:
   A. FOR VALVES SMALLER THAN 16", SEE NOTE 4A.
   B. FILL TO WITHIN 12" OF GROUND SURFACE W/SAND.
   C. FILL TOP 12" WITH TOPSOIL AND SEED WITH GRASS.

6. TYPICAL VALVE AND VAULT 16" AND LARGER TO BE ABANDONED ARE SHOWN ON THE DRAWINGS AS FOLLOWS:

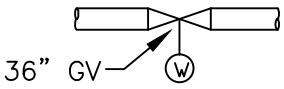

   A. SOME VALVES IN HEMPHILL PS YARD AREA HAVE ELECTRICAL VALVE OPERATIONS. DISCONNECT ELECTRICAL CONNECTIONS AT NEAR AND FAR (SOURCE) ENDS. REMOVE ELECTRIC AND EXTENDED BONNET AND RETURN TO THE DOW. OPERATOR

7. TYPICAL VALVES SMALLER THAN 16" TO BE ABANDONED ARE SHOWN ON THE DRAWINGS AS FOLLOWS:

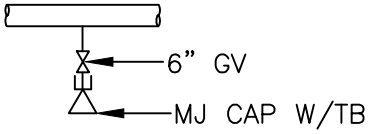

THIS DETAIL WAS TAKEN FROM THE CITY OF ATLANTA'S WEBSITE. IT MAY HAVE BEEN MODIFIED AND SHOULD BE REVIEWED THOROUGHLY.

City of Atlanta

STANDARD DETAILS

TYPICAL WATER MAIN AND VALVE ABANDONMENT

REV.
DATE: OCT. 2011
ORIG. DATE: NOV. 2004
SCALE: N.T.S.

DETAIL NO. WR-G_VL003

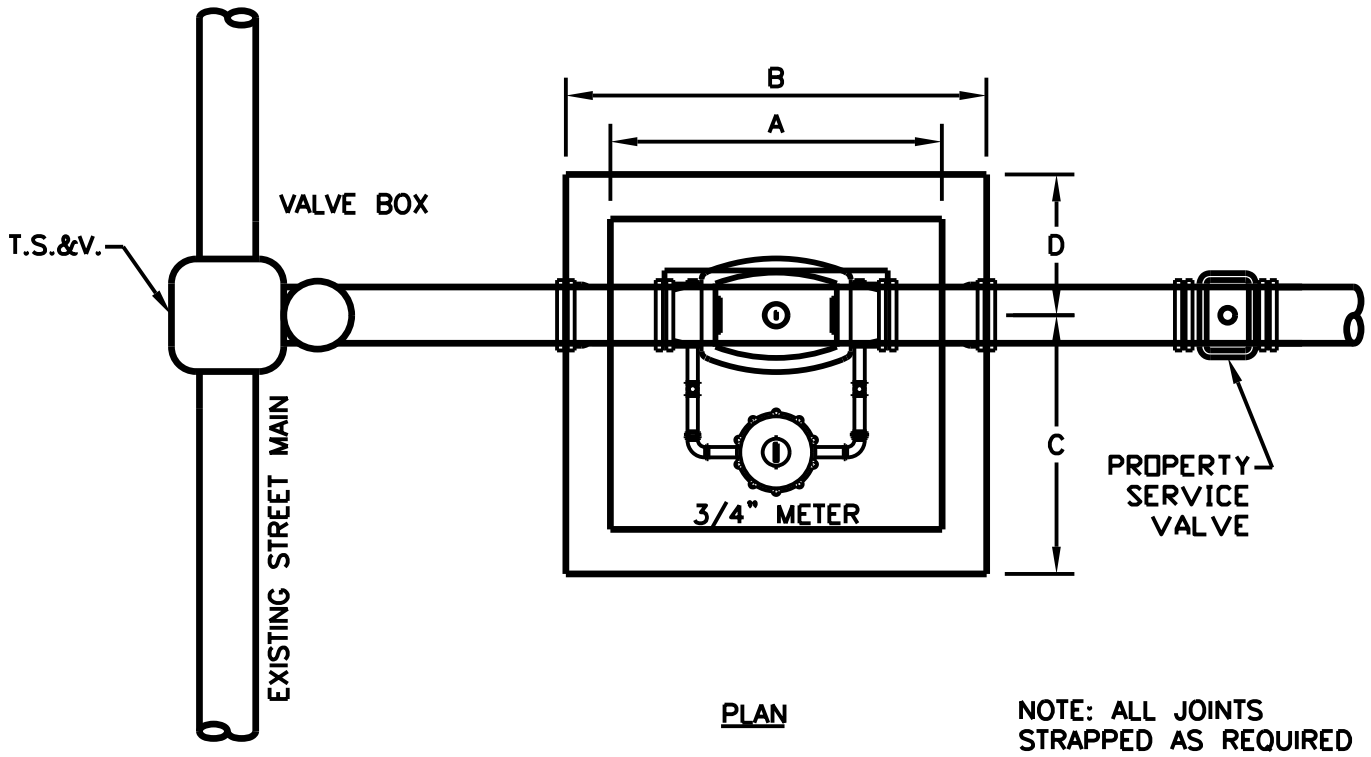

PLAN

NOTE: ALL JOINTS STRAPPED AS REQUIRED

BILL OF MATERIAL
1.) T.S.&V.
2.) 2- COUPLINGS
3.) DETECTOR CHECK (3/4" METER)
4.) 10'-8" D.I.P. SHORT
5.) +40'-8" D.I.P. LONG

NOTE:
FOR WATER MAIN IN SIDEWALK METER MAY BE INSTALLED PARALLEL WITH WATER MAIN.

IF INSUFFICIENT AREA EXISTS WITHIN PUBLIC RIGHT-OF-WAY, A METER EASEMENT MUST BE PROVIDED.

DIMENSIONS (IN INCHES)				
DETECTOR CHECK SIZE	A	B	C	D
6"	22?	48	34	20
8"	26?	48	34	20
10"	26?	48	34	20

NOTE: THIS DRAWING FOR DESIGN INFORMATION ONLY UWSA FORCES WILL INSTALL ALL DETECTORS CHECK VALVES.

THIS DETAIL WAS TAKEN FROM THE CITY OF ATLANTA'S WEBSITE. IT MAY HAVE BEEN MODIFIED AND SHOULD BE REVIEWED THOROUGHLY.

City of Atlanta

STANDARD DETAILS

TYPICAL DETECTOR CHECK VALVE INSTALLATION

REV.
DATE: OCT. 2011
ORIG. DATE: NOV. 2004
SCALE: N.T.S.

DETAIL NO. WR-G_VL004

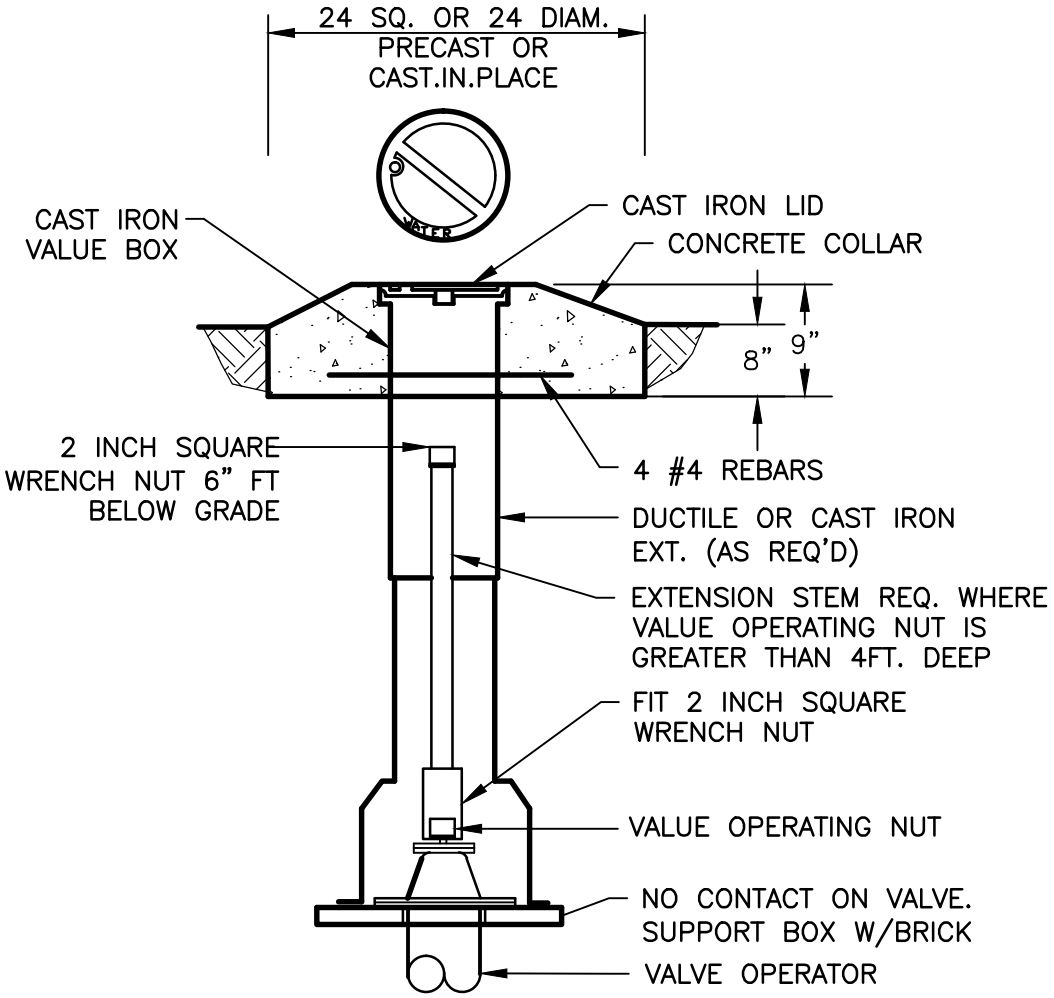

BURIED GATE VALVE BOX

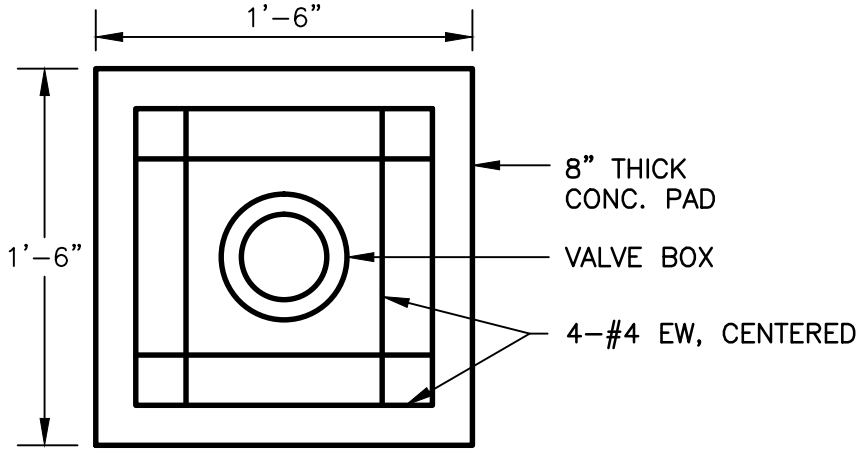

PLAN

CONCRETE PAD

THIS DETAIL WAS TAKEN FROM THE CITY OF ATLANTA'S WEBSITE. IT MAY HAVE BEEN MODIFIED AND SHOULD BE REVIEWED THOROUGHLY.

City of Atlanta	STANDARD DETAILS	REV. DATE: OCT. 2011 ORIG. DATE: NOV. 2004 SCALE: N.T.S.
	TYPICAL BURIED GATE VALVE BOX AND CONCRETE PAD	DETAIL NO. WR–G_VM001

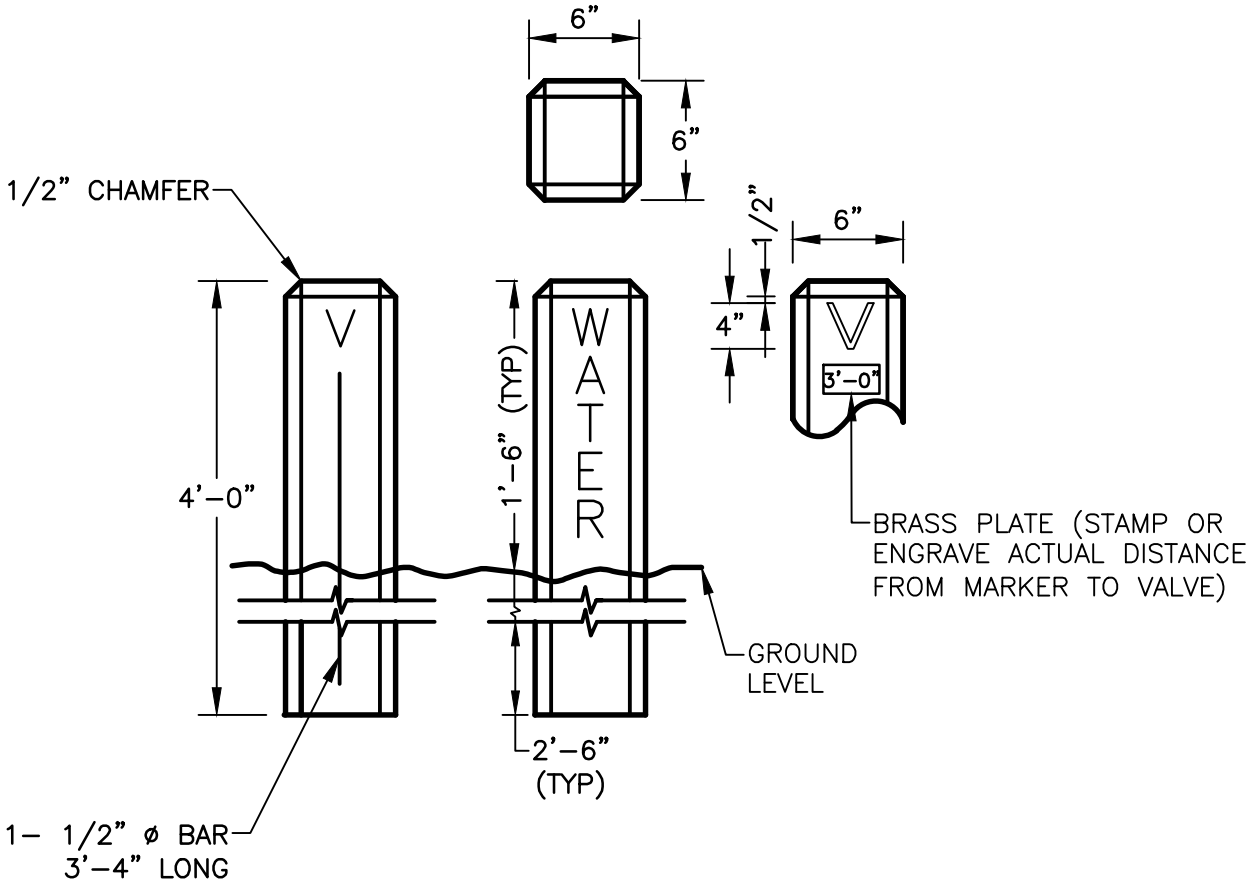

THIS DETAIL WAS TAKEN FROM THE CITY OF ATLANTA'S WEBSITE. IT MAY HAVE BEEN MODIFIED AND SHOULD BE REVIEWED THOROUGHLY.

City of Atlanta	STANDARD DETAILS	REV. DATE: OCT. 2011 ORIG. DATE: OCT. 2004 SCALE: N.T.S.
	WATER VALVE MARKER	DETAIL NO. WR-G_VM002

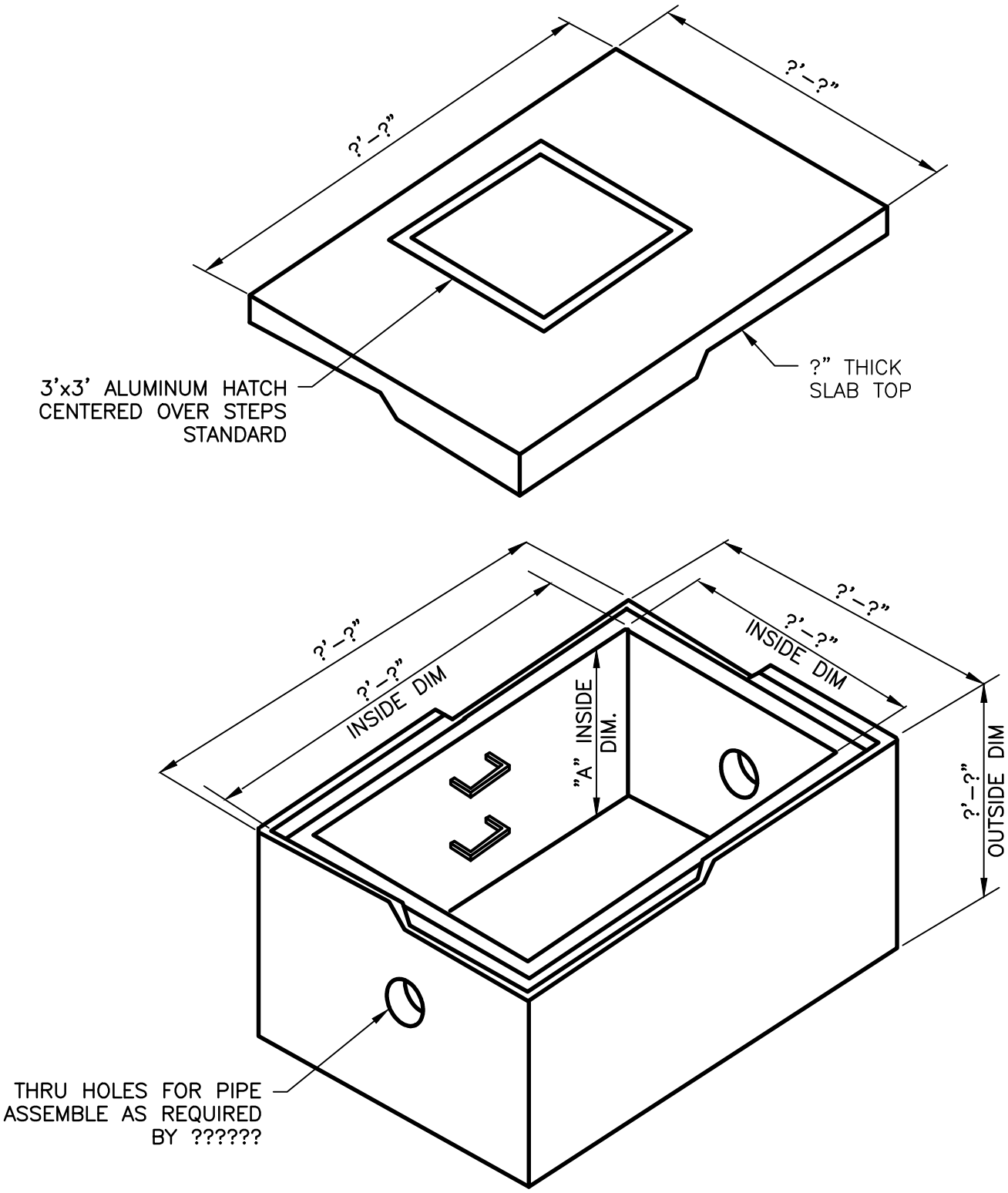

THIS DETAIL WAS TAKEN FROM THE CITY OF ATLANTA'S WEBSITE. IT MAY HAVE BEEN MODIFIED AND SHOULD BE REVIEWED THOROUGHLY.

City of Atlanta	STANDARD DETAILS	REV. DATE: SEPT 2011 ORIG. DATE: JULY 1984 SCALE: N.T.S.
	TYPICAL 4'–6' VALVE VAULT	DETAIL NO. WR–G_VT001

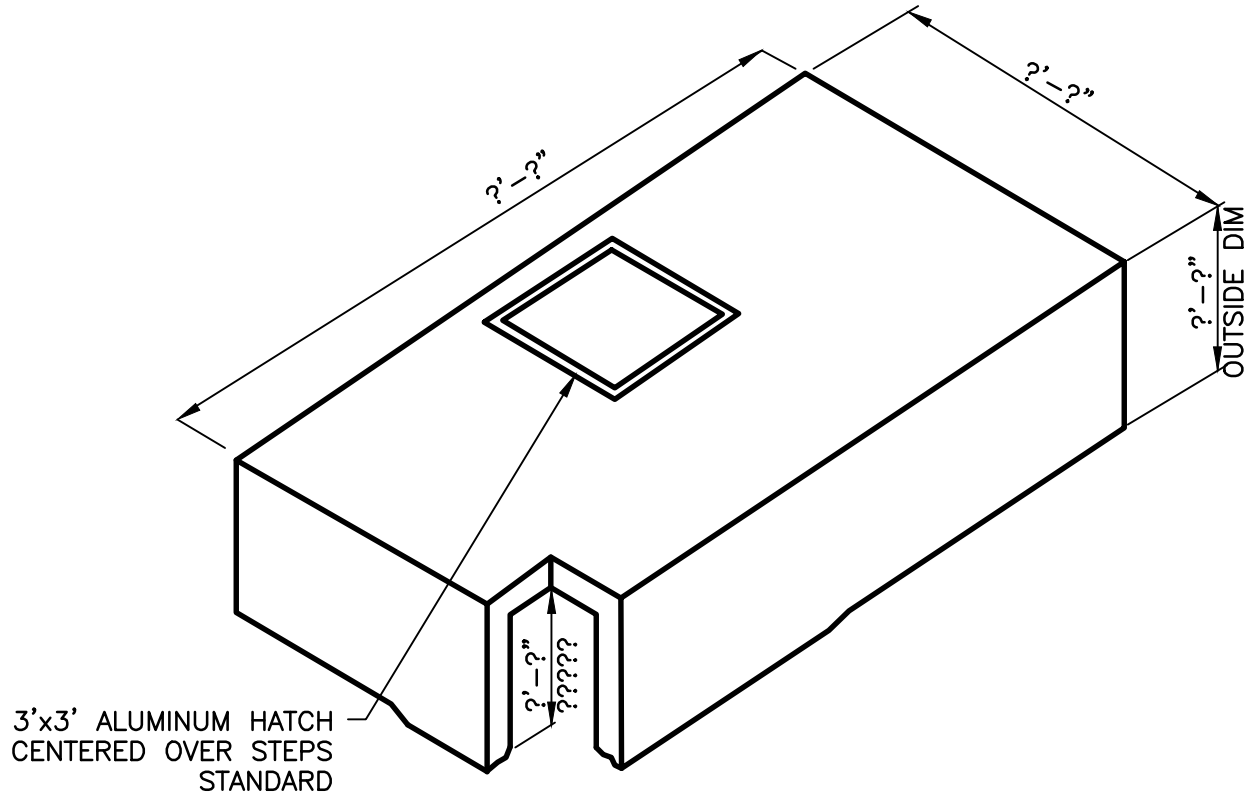

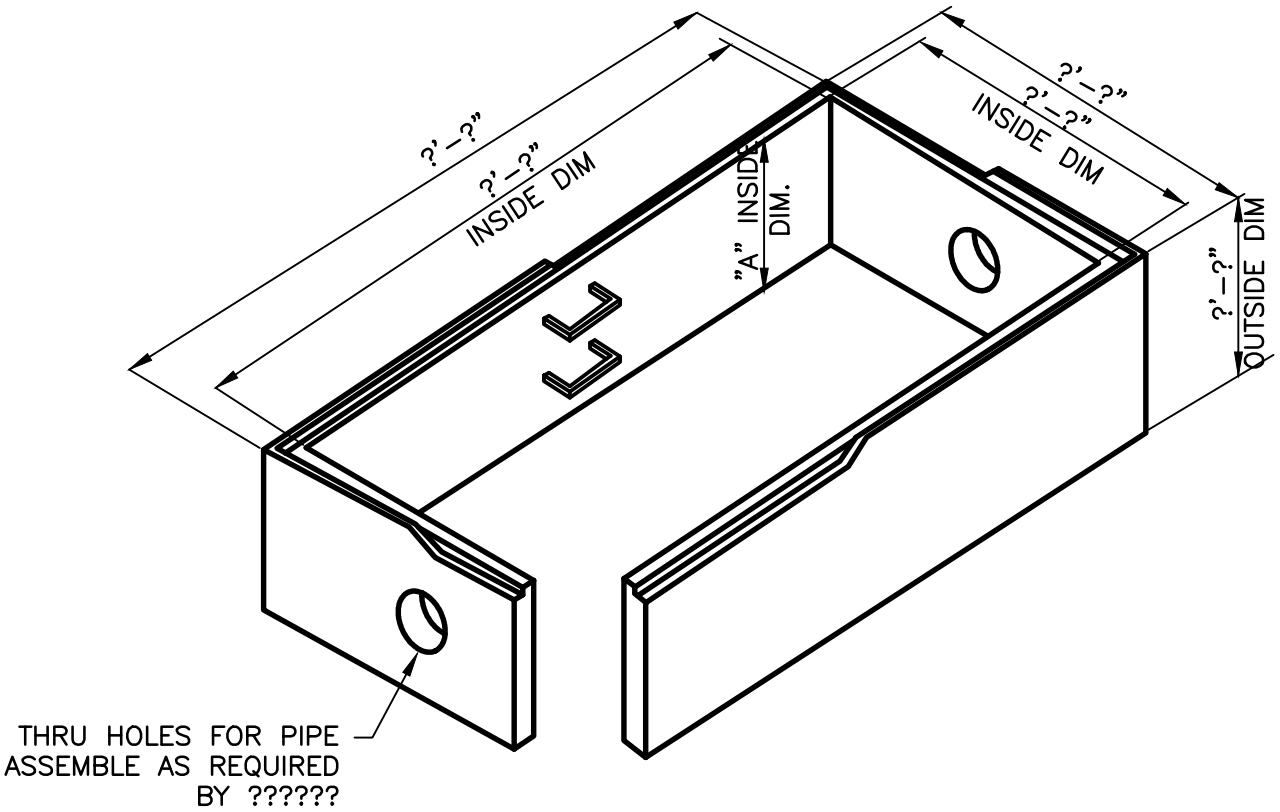

THIS DETAIL WAS TAKEN FROM THE CITY OF ATLANTA'S WEBSITE. IT MAY HAVE BEEN MODIFIED AND SHOULD BE REVIEWED THOROUGHLY.

City of Atlanta	STANDARD DETAILS	REV. DATE: SEPT 2011 ORIG. DATE: JULY 1984 SCALE: N.T.S.
	TYPICAL 6'–12' VALVE VAULT	DETAIL NO. WR–G_VT002

"A" DIMENSIONS	
VALVE SIZE	"A" (INCHES)
16"	14
20"	24
24"	24
30"	24
36"	24

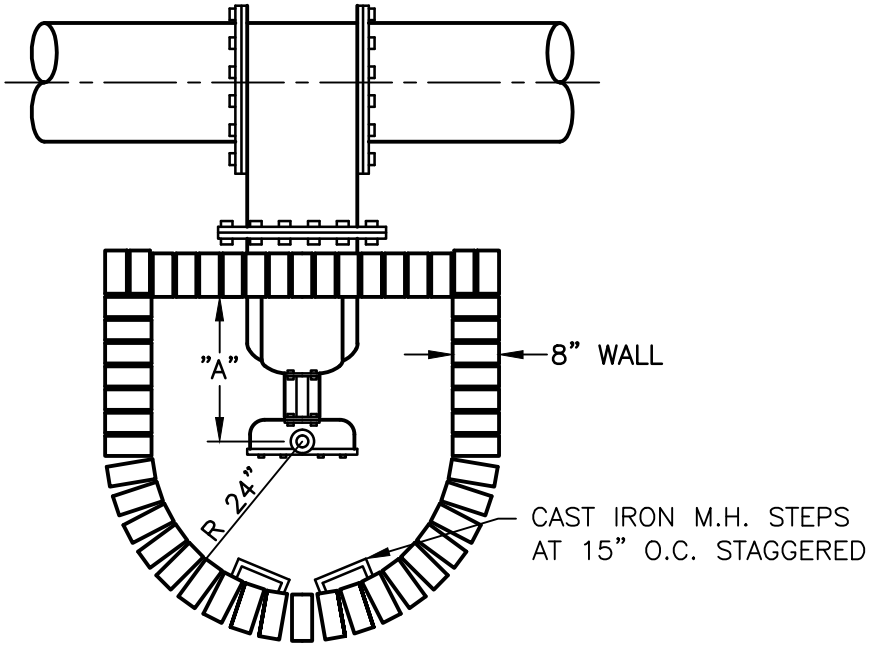

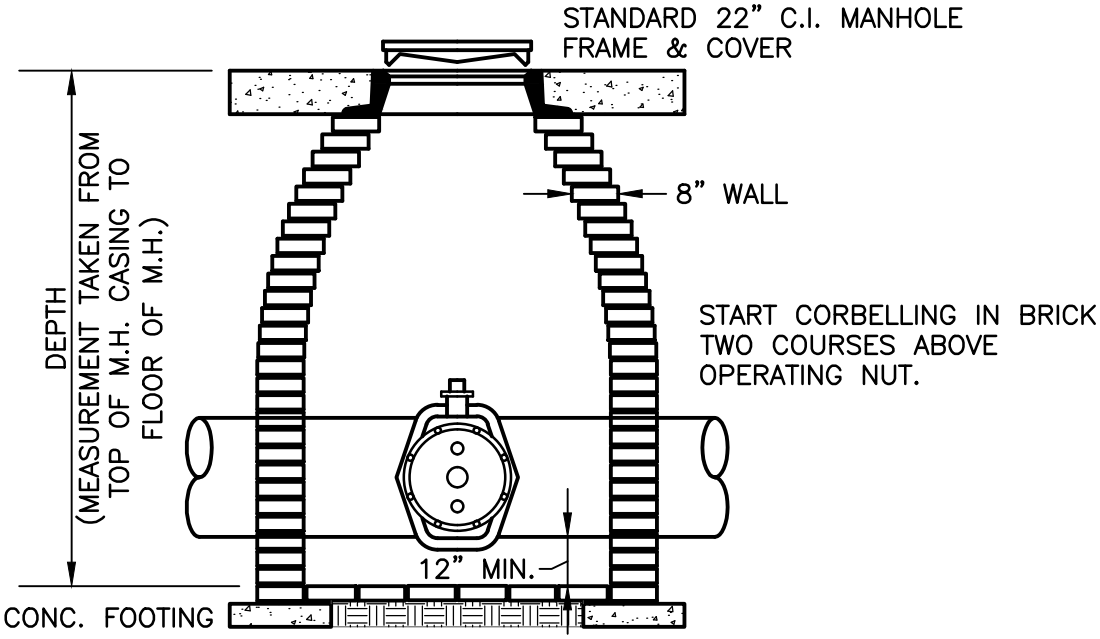

BRICK FLOOR TO BE OPEN JOINTS TO
PERMIT DRAINAGE (NO MORTAR REQUIRED)

THIS DETAIL WAS TAKEN FROM THE CITY OF ATLANTA'S WEBSITE. IT MAY HAVE BEEN MODIFIED AND SHOULD BE REVIEWED THOROUGHLY.

City of Atlanta

STANDARD DETAILS

TYPICAL VALVE VAULT 16" AND LARGER VALVES

REV.
DATE: OCT. 2011
ORIG. DATE: OCT. 2004
SCALE: N.T.S.

DETAIL NO. WR–G_VT003

COA Detail Index

Completed by: Atlanta Services Group
Conversion/Project Start date: October 2011

Sanitary Sewer

Done	File Name (.dgn)	Original Dat	Discription of Detail	Type
✓	SS-G_BC001	11/1/04	BOOT CONNECTION	Main Connection
✓	SS-G_DM001	11/1/04	DEFLECTION TEXT MANDREL	Part
✓	SS-G_FC001	11/1/04	LIGHT CASTING FRAME AND COVER FOR PRECAST SLABS	MH Cover
✓	SS-G_MC001	11/1/04	MANHOLE COLLAR	Manhole - Collar
✓	SS-G_MH001	11/1/04	MANHOLE BASE	Manhole - Structure
✓	SS-G_MH004	11/1/04	LARGE DIAMETER MANHOLE BASE	Manhole - Large Base
✓	SS-G_MH009	1/1/97	MANHOLE PLAN AND DIAMETERS	Manhole - Structure/Dimensions
✓	SS-G_MS001	11/1/04	MANHOLE STEPS	Manhole - Steps
✓	SS-G_SC001	11/1/04	SERVICE CONNECTION ON NEW SEWERS	Service
✓	SS-G_SC002	11/1/04	DEEP SEWER CONNECTION	Service
✓	SS-G_SC003	11/1/04	SERVICE CONNECTION	Service
✓	SS-G_SC004	11/1/04	SERVICE CONNECTION CLEANOUT	Cleanout
✓	SS-G_SC005	11/1/04	SANITARY CLEANOUT BOX	Cleanout Box
✓	SS-G_WC001	11/1/04	WATER STOP COLLAR	Collar/Structure

Sanitary General

Done	File Name (.dgn)	Original Dat	Discription of Detail	Type
✓	SG-G_FC003	11/1/04	WATERTIGHT FRAME AND COVER	Cover
✓	SG-G_FC002	11/1/04	SOLID FRAME AND COVER	Cover
✓	SG-G_MH003	11/1/04	VENTED FRAME AND COVER	Cover
✓	SG-G_MH005	11/1/04	MANHOLE BASE WITH DROP CONNECTION	Manhole base/Drop
✓	SG-G_MH006	11/1/04	PIPED INSIDE DROP CONNECTION FOR MANHOLES	Manhole/Drop
✓	SG-G_MH007	11/1/04	MANHOLE OVER EXISTING SEWER	Manhole/Doghouse
✓	SG-G_MH008	11/1/04	SHALLOW MANHOLE	Manhole

Water

Done	File Name (.dgn)	Original Dat	Discription of Detail	Type
✓	WR-G_AN001	11/1/04	TYPICAL STRAP AND ROD DETAIL	Clamp
✓	WR-G_AN004	11/1/04	TYPICAL ANCHORS	Anchors
✓	WR-G_AN004	10/1/04	PIPE HANGER	Hanger
✓	WR-G_AN006	11/1/04	TYPICAL HANGER DETAIL FOR CON. BEAM BRIDGES	Hanger
✓	WR-G_CP001	10/1/04	TYPICAL PIPE-CASING CORROSION PROTECTION TEST LEADS	Casing
✓	WR-G_CP002	10/1/04	TYP. CORROSION PROTECTION INTERFERENCE TEST LEADS	Leads
✓	WR-G_CP003	11/1/04	TYPICAL CATHODIC PROTECTION BONDS	Protection
✓	WR-G_CP004	11/4/04	TYPICAL WATERPROOF ANODE CONNECTIONS	Protection
✓	WR-G_CP005	11/1/04	PROCEDURE FOR MAKING BRAZED CONNECTION	Connection
✓	WR-G_CP006	10/1/04	TYPICAL MAGNESIUM ANODE INSTALLATION	Anode
✓	WR-G_CR001	10/1/04	TYPICAL RAILROAD OR FREEWAY CROSSING	Crossing
✓	WR-G_DF001	11/1/04	MAXIMUM PERMISSIBLE JOINT DEFLECTIONS	Deflections
✓	WR-G_FC004	10/1/04	TYPICAL MANHOLE FRAME AND COVER ASSEMBLY	Frame and Cover
✓	WR-G_FH001	10/1/04	TYPICAL FIRE HYDRANT	Fire Hydrant
✓	WR-G_FH002	11/1/04	TYPE "A" TYPICAL FIRE HYDRANT	Fire Hydrant
✓	WR-G_FH003	11/1/04	TYPE "B" TYPICAL FIRE HYDRANT	Fire Hydrant
✓	WR-G_ME001	10/1/04	TYPICAL METER BOX ASSEMBLY	Meter box
✓	WR-G_ME002	11/1/04	TYPICAL F.M. METER INSTALLATION	F.M. Meter
✓	WR-G_ME003	11/1/04	TYPICAL METER BOX LID AND FRAME TRAFFIC TYPE	Meter box
✓	WR-G_ME004	11/1/04	TYPICAL METER BOX LID AND FRAME SIDEWALK TYPE	Meter box
✓	WR-G_MJ002	11/1/04	MECHANICAL JOINT BOLT USAGE CHART	MJ Chart
✓	WR-G_MT001	10/1/04	TYPICAL WATER MAIN TERMINATION	WM Termination
✓	WR-G_PR001	7/1/84	STANDARD REINFORCED CONCRETE PIER 1 OF 3	Conc. Pier

✓	WR-G_PR001	7/1/84	STANDARD REINFORCED CONCRETE PIER 2 OF 3	Conc. Pier
✓	WR-G_PR001	7/1/84	STANDARD REINFORCED CONCRETE PIER 3 OF 3	Dimensions
✓	WR-G_PR002	7/1/84	STANDARD CUT-WATER PIERS 1 OF 6	Cut Piers
✓	WR-G_PR002	7/1/84	STANDARD CUT-WATER PIERS 2 OF 6	Cut Piers
✓	WR-G_PR002	7/1/84	STANDARD CUT-WATER PIERS 3 OF 6	Cut Piers
✓	WR-G_PR002	7/1/84	STANDARD CUT-WATER PIERS 4 OF 6	Cut Piers
✓	WR-G_PR002	7/1/84	STANDARD CUT-WATER PIERS 5 OF 6	Cut Piers
✓	WR-G_PR002	7/1/84	STANDARD CUT-WATER PIERS 6 OF 6	Cut Piers
✓	WR-G_PR003	7/1/84	STANDARD PIER TO SUPPORT 42" STEEL	Pier
✓	WR-G_PR003	7/1/84	STANDARD PIER TO SUPPORT 42" STEEL	Dimensions
✓	WR-G_PV001	10/1/04	TYPE I PAVEMENT REPLACEMENT	Pavement
✓	WR-G_PV002	10/1/04	TYPE II PAVEMENT REPLACEMENT	Pavement
✓	WR-G_PV003	10/1/04	TYPE III PAVEMENT REPLACEMENT	Pavement
✓	WR-G_PV004	11/1/04	SIDEWALK, CURB AND GUTTER REPAIRS	Sidewalk, gutter repairs
✓	WR-G_PV005	11/1/04	DRIVEWAY CUT REPAIRS CONCRETE, GRAVEL & ASPHALT	Cut repairs
✓	WR-G_RD001	10/1/04	UNDERGROUND UTILITY TYPICAL CORSS SECTION	UTILITIES
✓	WR-G_SP001	10/1/04	TYPICAL SPUD INSTALLATION MAIN IN STREET	Spud or stub in street
✓	WR-G_SP002	10/1/04	TYPICAL SPUD INSTALLATION MAIN IN SIDEWALK	Spud or stub in sidewalk
✓	WR-G_SP003	10/1/04	TYPICAL SPUD INSTALLATION MAIN IN OPPOSITE SIDEWALK	Spud or stub in sidewalk
✓	WR-G_SV002	10/1/04	TYPICAL LONGSIDE & SHORTSIDE SERVICE INSTALLATION	Service
✓	WR-G_SV003	11/1/04	TYPICAL FIRE-SERVICE INSTALLATION	Fire Service
✓	WR-G_SV004	10/1/04	WATER SERVICE AND METER CONNECTION	Service and meter
✓	WR-G_SV005	11/1/04	TYP. WATER SERVICE & METER CONN. W/ RETRO SETTERS	Service and meter
✓	WR-G_TH004	11/1/04	TYPICAL DOWNWARD THRUST BLOCK	Thrust block
✓	WR-G_TH005	11/1/04	TYPICAL HORIZONTAL THRUST BLOCK	Thrust block
✓	WR-G_TH006	10/1/04	TYPICAL BLOCKING	Blocking
✓	WR-G_TP001	11/1/04	TYPICAL CUTS FOR STATE AND HIGHWAY PERMITS	Cut permits
✓	WR-G_TR001	10/1/04	TYPICAL WATERLINE TRENCH SECTION	Trench
✓	WR-G_TR002	10/1/04	TYPICAL WATER MAIN BEDDING & HAUNCHING	Bedding
✓	WR-G_TR003	10/1/04	TRENCH TERMINOLOGY	Trench
✓	WR-G_TS002	10/1/04	TYPICAL TEST STATION AT THE JUNC. OF NEW & EXIST. PIPE	Test Station
✓	WR-G_TS003	10/1/04	TYPICAL PIPELINE TEST STATION	Test Station
✓	WR-G_VB001	11/1/04	TYPICAL UNDERGROUND VALVE BOX	Valve Box
✓	WR-G_VB002	10/1/04	TYPICAL 4"-12" VALVE BOX ASSEMBLY	Valve Box top
✓	WR-G_VB003	10/1/04	TYPICAL 4"-12" VALVE BOX ASSEMBLY	Valve Box bottom
✓	WR-G_VL001	10/1/04	TYPICAL MANUAL AIRE VALVE	Air Valve
✓	WR-G_VL002	10/1/04	TYPICAL AIR VALVE AUTOMATIC	Air Valve
✓	WR-G_VL003	11/1/04	TYPICAL WATER MAIN AND VALVE ABANDONMENT	Valve abandon
✓	WR-G_VL004	11/1/04	TYPICAL DETECTOR CHECK VALVE INSTALLATION	Valve detector check
✓	WR-G_VN001	11/1/04	TYPICAL BURIED GATE VALVE BOX AND CONC. PAD	Valve box, pad
✓	WR-G_VM002	10/1/04	WATER VALVE MARKER	Valve Marker
✓	WR-G_VT001	7/1/84	TYPICAL 4'-6' VALVE VAULT	Vault
✓	WR-G_VT002	7/1/84	TYPICAL 6'-12' VALVE VAULT	Vault
✓	WR-G_VT003	10/1/04	TYPICAL VALVE VAULT 16" AND LARGER VALVES	Vault

Storm Water

Done	File Name (.dgn	riginal Dat	Discription of Detail	Type
✓	SW-G_CB001	11/1/04	TYPE "C" CATCH BASIN	Catch Basin
✓	SW-G_CB002	11/1/04	MODIFIED TYPE "C" CATCH BASIN	Catch Basin
✓	SW-G_CB003	11/1/04	TYPE "B" CATCH BASIN	Catch Basin
✓	SW-G_CB004	8/1/73	STANDARD CURB CATCH BASIN TYPE "A"	Catch Basin
✓	SW-G_CB005	7/1/66	STANDARD TRAP CATCH BASIN TYPE "A"	Catch Basin
✓	SW_G_CB007	8/1/93	STANDARD CURB CATCH BASIN 1 OF 2 MULIT. INSTALLATION	Catch Basin
✓	SW-G_CB008	N/A	TYPE "B" CATCH BASIN	Catch Basin
✓	SW-G_CB009	7/1/67	STANDARD CURB CATCH BASIN 2 OF 2 MULTI. INSTALLATION	Catch Basin
✓	SW-G_CB010	9/1/85	TRIPLE CATCH BASIN TYPE "B" (TRAPPED)	Catch Basin
✓	SW-G_CB011	1/1/68	TYPE "C" CATCH BASIN	Catch Basin
✓	SW-G_CB012	7/1/84	TYPE "C" CATCH BASIN	Catch Basin
✓	SW-G_CB014	9/1/93	STANDARD CATCH BASIN CASTING	Casting
✓	SW-G_CB015	7/1/84	STANDARD HEAVY-DUTY CATCH BASIN CASTING	Casting
✓	SW-G_CB016	7/1/84	TYPE "B" (MOD.) CATCH BASIN CASTING	Casting
✓	SW-G_CW001	7/1/84	STANDARD COLLAR WALL	Concrete
✓	SW-G_DI001A	11/1/04	STANDARD DROP INLET	Drop Inlet
✓	SW-G_DI002	11/1/04	STANDARD DROP INLET YARD INLET	Yard Inlet
✓	SW-G_DI004	7/1/84	STANDARD DROP INLET (TRAPPED)	Drop Inlet
✓	SW-G_GR001	1/1/97	STANDARD GRATE AND FRAME	Grate
✓	SW-G_GR005	1/1/97	BICYCLE SAFETY GRATE	Grate
✓	SW-G_HW001	7/1/84	STANDARD PRECAST CONC. HEADWALL 18"-36" 1 OF 3	Headwall
✓	SW-G_HW001	7/1/84	STANDARD PRECAST CONC. HEADWALL 18"-36" 2 OF 3	Headwall

c

✓	SW-G_HW001	7/1/84	STANDARD PRECAST CONC. HEADWALL 18"-36" 3 OF 3	Headwall
✓	SW-G_HW002	7/1/84	STANDARD HEADWALL 1 OF 2	Headwall
✓	SW-G_HW002	7/1/84	STANDARD HEADWALL 2 OF 2	Headwall
✓	SW-G_HW003	7/1/84	STANDARD RUBBLE HEADWALL 1 OF 2	Headwall
✓	SW-G_HW003	7/1/84	STANDARD RUBBLE HEADWALL 2 OF 2	Headwall
✓	SW-G_HW004	7/1/84	TYPE C HEADWALL 1 OF 3	Headwall
✓	SW-G_HW004	7/1/84	TYPE C HEADWALL 2 OF 3	Headwall
✓	SW-G_HW004	7/1/84	TYPE C HEADWALL 3 OF 3	Dimensions
✓	SW-G_HW005	7/1/84	TYPE C HEADWALL 1 OF 2	Headwall
✓	SW-G_HW005	7/1/84	TYPE C HEADWALL 2 OF 2	Dimensions
✓	SW-G_HW006	7/1/84	TYPE E HEADWALL 1 OF 2	Headwall
✓	SW-G_HW006	7/1/84	TYPE E HEADWALL 2 OF 2	Dimensions
✓	SW-G_HW007	7/1/84	TYPE F HEADWALL	Headwall
✓	SW-G_HW008	7/1/84	TYPE G HEADWALL 1 OF 2	Headwall
✓	SW-T__P001	unknown	STORMWATER PLANTER	Planter
✓	SW-T__P002	unknown	STORMWATER PLANTER	Planter
✓	SW-T__P003	unknown	STORMWATER PLANTER SECTION	Planter
✓	SW-T__P004	unknown	STORMWATER PLANTER SECTION	Planter
✓	SW-T__P005	unknown	STORMWATER BULB OUT PLAN	Planter
✓	SW-T__P006	unknown	STORMWATER BULB OUT PLAN	Planter
✓	SW-T__P007	unknown	STORMWATER BULB OUT SECTION	Planter
✓	SW-T__P008	unknown	INLET DETAILS	Planter
✓	SW-T__P009	unknown	STORM WATER PLANTER NOTES	Planter

Transportation

Done	File Name (.dgn)	Original Dat	Discription of Detail	Type
✓	TR-B_CG001	1/1/97	CONCRETE CURB AND GUTTER	Curb and Gutter
✓	TR-B_CG002	11/1/04	GRANITE CURB AT DRIVEWAY	Curb Granite
✓	TR-B_CW001	11/1/04	PIANO - KEY STYLE SPRIPED CROSSWALK	Cross Walk
✓	TR-B_DR001	11/1/04	STANDARD DRIVEWAY WITH CURB AND GUTTER	Driveway, Curb
✓	TR-B_DR002	11/1/04	ALTERNATE DRIVEWAY FOR ADA REQUIREMENTS	Driveway ADA
✓	TR-B_DR003	11/1/04	CURBS, GUTTERS AND SIDEWALKS	Curbs, Gutters
✓	TR-B_DR004	1/1/97	STANDARD WHEELCHAIR RAMP	Wheelchair
✓	TR-B_DR005	11/1/04	STANDARD DRIVEWAY DETAIL	Driveway
✓	TR-B_DR006	11/1/04	ALTERNATE DRIVEWAY APRON	Driveway
✓	TR-B_DR007	11/1/04	NARROW DRIVEWAY APRON	Driveway
✓	TR-B_GR001	1/1/97	BIKE SAFETY GRATE (ASTM A-48-74 CLASS 30)	Bike Grate
✓	TR-B_HL001	11/1/04	TYPICAL TYPE I HANDRAIL	Handrail
✓	TR-B_HR001	1/1/97	TYPE A PEDESTRIAN RAMP	Pedestrian Ramp
✓	TR-B_HR002	1/1/97	TYPE B PEDESTRIAN RAMP	Pedestrian Ramp
✓	TR-B_HR003	1/1/97	TYPE C PEDESTRIAN RAMP	Pedestrian Ramp
✓	TR-B_HR004	11/1/04	TYPE D PEDESTRIAN RAMP	Pedestrian Ramp
✓	TR-B_HR005	1/1/97	SKEWED RAMP DETAILS TYPE A AND D ONLY	Ramp
✓	TR-B_SW003	1/1/97	CONCRETE SIDEWALK AND CONRETE HEADER CURB	Sidewalk, Header Curb
✓	TR-B_SW004	1/1/97	STANDARD MONOLITHIC SIDEWALK AND CURB	Sidewalk, Curb, Monolithic
✓	TR-B_SW005	11/1/04	HEXAGONAL TILE SIDEWALK	Sidewalk
✓	TR-B_SW006	1/1/97	BRICK SIDEWALK	Sidwalk, Brick
✓	TR-B-SW007	11/1/04	STANDARD WHEELCHAIR RAMP	Wheelchair
✓	TR-B_SW008	11/1/04	STANDARD WHEELCHAIR RAMP AND SIDEWALK	Wheelchair
✓	TR-B_SW009	1/1/97	STANDARD SIDEWALK FLUME	Sidewalk Flume
✓	TR-B_SW010	11/1/04	TRUNCATED DOME DETAIL	Sidewalk - Truncated Dome
✓	TR-B_WA001	1/1/97	STANDARD MASONARY WALL	Wall
✓	TR-B_PV009	11/1/04	COMMERCIAL STREET PAVEMENT SECTION	Pavement
✓	TR-B_PV010	11/1/04	RESIDENTIAL STREET PAVEMENT SECTION	Pavement
✓	TR-G_CS001	7/1/97	TYP. CUL-DE-SAC FOR 32' R/W 28' STREET (SYMMETRICAL)	Cul-de-Sac
✓	TR-G_CS001	7/1/97	TYP. CUL-DE-SAC FOR 32' R/W 28' STREET (OFFSET)	Cul-de-Sac
✓	TR-G_CS003	2/1/69	TYP. CUL-DE-SAC FOR 50' R/W 32' STREET (SYMMETRICAL)	Cul-de-Sac
✓	TR-G_CS004	3/1/69	TYP. CUL-DE-SAC FOR 50' R/W 32' STREET (OFFSET)	Cul-de-Sac
✓	TR-G_SH001	11/1/04	SPEED HUMP	Speed Hump
✓	TR-G_SS001	11/1/04	STANDARD STREETS WITH 50' R/W SIDEWALK	R/W
✓	TR-G_SS002	1/1/97	STANDARD STREETS WITH CROWN DATA	Crown Data

Erosion Control

Done	File Name (.dgn)	Original Dat	Discription of Detail	Type
✓	ER-G_CD001	12/25/07	CHECKDAM STONE	Cd-S
✓	ER-G_CO001	12/25/07	CONSTRUCTION EXIT	Co
✓	ER-G_CW001	12/25/07	CONCRETE TRUCK WASHDOWN	Notes

✓	ER-G_DI001	12/25/07	DIVERSION	Di
✓	ER-G_DN001	12/25/07	TEMPORARY DOWNDRAIN STRUCTURE	Dn-1
✓	ER-G_FR001	12/25/07	STONE FILTER	Fr
✓	ER-G_LV001	12/25/07	LEVEL SPREADER	Lv
✓	ER-G_RD001	12/25/07	ROCKFILTER DAM	Rd
✓	ER-G_RT001	12/25/07	PERFORATED HALF ROUND PIPE WITH STONE FILTER	Rt-P
✓	ER-G_RT002	12/25/07	RETROFIT	Rt (CALCS)
✓	ER-G_SD001	12/25/07	TYPE C SILT FENCE	Sd1-C
✓	ER-G_SD002	12/25/07	CURB INLET PROTECTION	Sd2-P
✓	ER-G_SD002.1	12/25/07	CURB INLET PROTECTION	NOTES
✓	ER-G_SD003	12/25/07	BAFFLE BOX	Sd2-F
✓	ER-G_SD003.1	12/25/07	BAFFLE BOX	NOTES
✓	ER-G_SD004	12/25/07	BLOCK AND GRAVEL DROP INLET PROTECTION	Sd2-F
✓	ER-G_SD004.1	12/25/07	BLOCK AND GRAVEL DROP INLET PROTECTION	NOTES
✓	ER-G_SD005	12/25/07	FILTER FABRIC WITH SUPPORTING FRAME	Sd2-F
✓	ER-G_SD005.1	12/25/07	FILTER FABRIC WITH SUPPORTING FRAME	NOTES
✓	ER-G_SD003	12/25/07	EXCAVATED INLET SEDIMENT TRAP	Detail
✓	ER-G_SR001	12/25/07	TEMPORARY STREAM CROSSING	Sr
✓	ER-G_ST001	12/25/07	STORM DRAIN OUTLET PROTECTION	St
✓	ER-G_ST001.1	12/25/07	STORM DRAIN OUTLET PROTECTION	NOTES
✓	ER-G_SU001	12/25/07	SURFACE ROUGHENING	Su

MAIN CATEGORY
ER - EROSION CONTROL
SG - SANITARY GENERAL
SS - SANITARY SEWER
SW - STROM WATER
TR - TRANSPORTATION
WR - WATER

SUB-CATEGORY
G - GENERAL
B - BIKE PEDESTRIAN