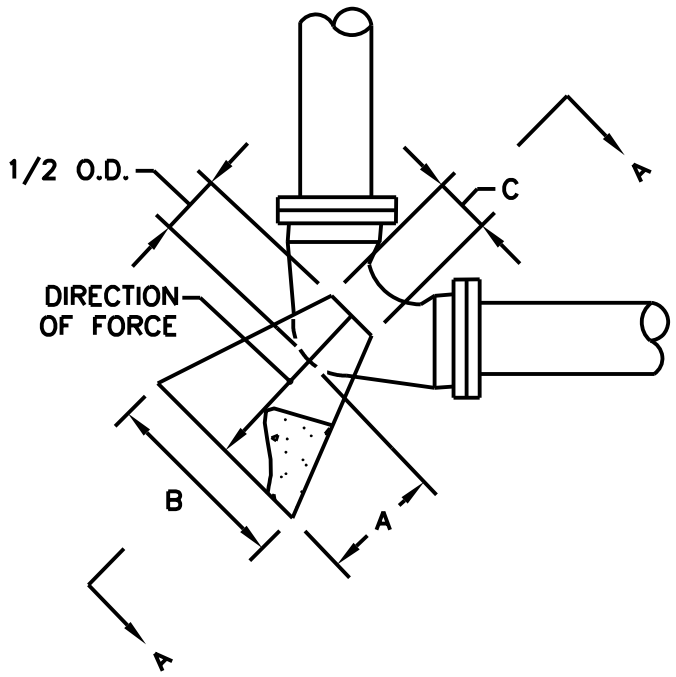

ELEVATION

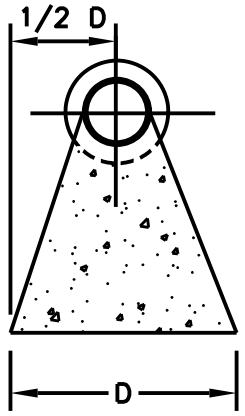

SECTION A

NOTE:
ENGINEER SHALL VERIFY SOIL CONDITION BEFORE THRUST BLOCK DESIGN IS IMPLEMENTED.

DESIGN DATA:
DIMENSION OF THRUST BLOCK IN FEET BASED ON 2000 POUNDS PER SQUARE FOOT SOIL BEARING PRESSURE AND 250 PER SQUARE INCH TEST PRESSURE. ACTUAL INSIDE DIAMETER OF DUCTILE IRON PIPE, CLASS 2 USED AS STANDARD. CONCRETE SHALL BE CLASS A,3000 P.S.I. HIGH EARLY.

MINIMUM DIMENSIONS IN FEET FOR CONCRETE BLOCKING

BEND	SIZE	A	B	C	D	VOLUME CUBIC YARD
	6"	1.0	1.0	7"	1.0	0.03
	8"	1.0	1.25	7"	1.0	0.04
11 1/4°	12"	1.0	2.0	11"	2.0	0.1
	16"	2.0	3.0	15"	2.0	0.3
	20"	2.0	3.0	19"	3.0	0.5
	24"	3.0	4.0	22"	3.0	0.8
	6"	1.0	1.5	7"	1.0	0.04
	8"	1.0	2.0	7"	2.0	0.1
22 1/2°	12"	2.0	3.0	11"	2.0	0.3
	16"	2.0	4.0	15"	3.0	0.6
	20"	3.0	5.0	19"	3.0	0.1
	24"	4.0	6.0	22"	4.0	2.3
	6"	1.5	2.0	7"	1.5	0.11
	8"	2.0	3.0	7"	2.0	0.3
45°	12"	2.0	4.0	11"	3.0	0.7
	16"	3.0	5.0	15"	4.0	1.4
	20"	4.0	6.0	19"	5.0	2.8
	24"	5.0	8.0	22"	6.0	5.0

BEND	SIZE	A	B	C	D	VOLUME CUBIC YARD
	6"	1.75	2.5	7"	2.0	0.2
	8"	2.0	3.0	7"	3.0	0.4
90°	12"	4.0	6.0	11"	4.0	2.1
	16"	4.0	7.0	15"	5.0	3.1
	20"	5.0	8.0	19"	7.0	5.3
	24"	6.0	10.0	22"	8.0	10.5
	6"	1.5	2.0	7"	1.75	0.13
TEES	8"	2.0	3.0	7"	2.0	0.3
AND	12"	2.0	4.0	11"	4.0	0.8
PLUGS	16"	4.0	5.0	15"	5.0	1.8
	20"	2.0	7.0	19"	6.0	3.9
	24"	2.0	8.0	22"	7.0	5.5

THIS DETAIL WAS TAKEN FROM THE CITY OF ATLANTA'S WEBSITE. IT MAY HAVE BEEN MODIFIED AND SHOULD BE REVIEWED THOROUGHLY.

City of Atlanta

STANDARD DETAILS

TYPICAL DOWNWARD THRUST BLOCK

REV.
DATE: OCT. 2011
ORIG. DATE: NOV. 2004
SCALE: N.T.S.

DETAIL NO. WR-G_TH004