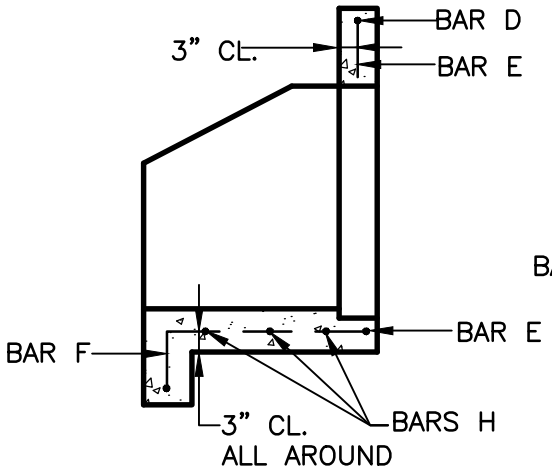

SECTION B–B

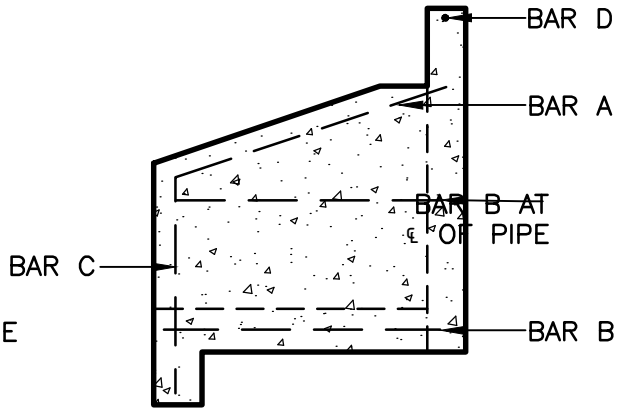

SECTION A–A

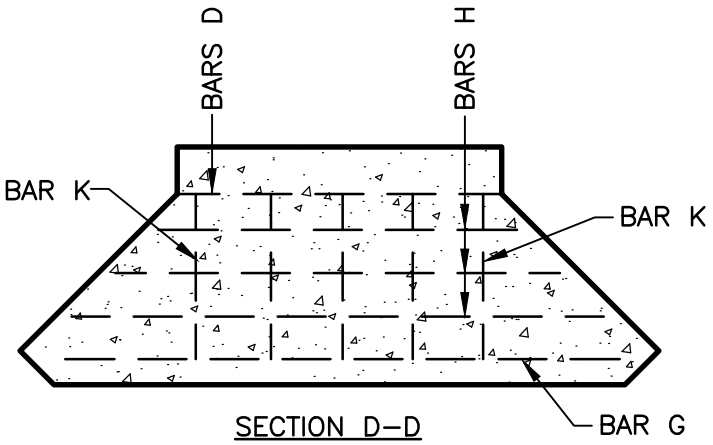

SECTION D–D

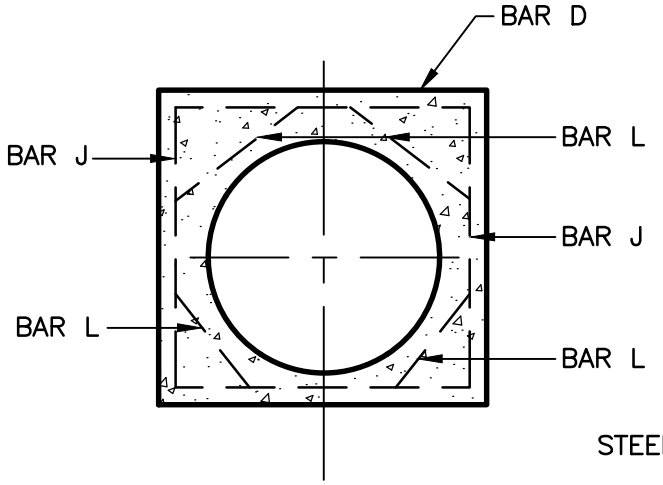

SECTION C–C

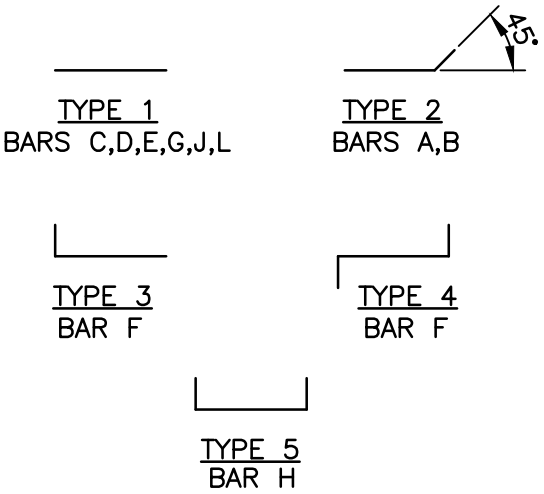

BAR REINE DETAILS

N.T.S. REINFORCED
STEEL TO BE 1/2" ø BARS

THIS DETAIL WAS TAKEN FROM THE CITY OF ATLANTA'S WEBSITE. IT MAY HAVE BEEN MODIFIED AND SHOULD BE REVIEWED THOROUGHLY.

City of Atlanta

STANDARD DETAILS

STD. PRECAST CONCRETE HEADWALL 18"–36" PIPE
SHEET 3 OF 3

REV.
DATE: SEPT 2011
ORIG. DATE: JULY 1984
SCALE: N.T.S.

DETAIL NO. SW–G_HW001