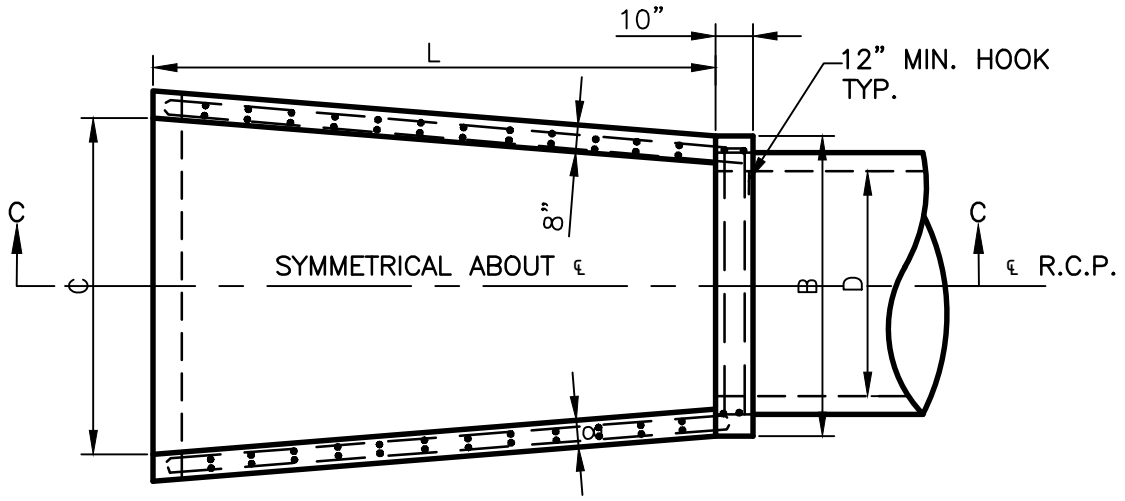

PLAN
(SHOWING WALL REINFORCMENT ONLY)

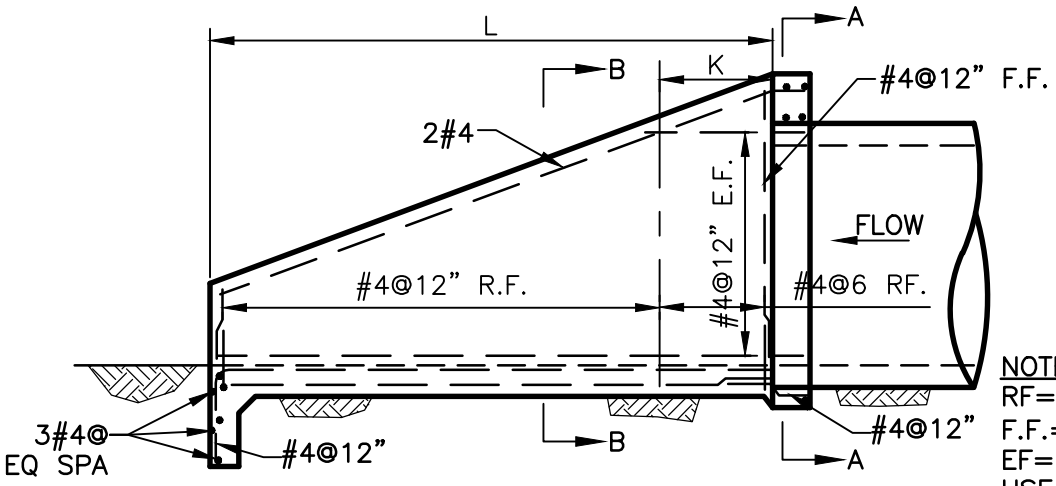

STEEL DETAIL

NOTE:
RF=REAR FACE
F.F.=FRONT FACE (EXPOSED)
EF=EACH FACE
USE ONLY WHERE OTHER HEADWALLS CAN NOT BE USED. HEADWALL TO BE PARALLEL TO ℄ OF ROADWAY.

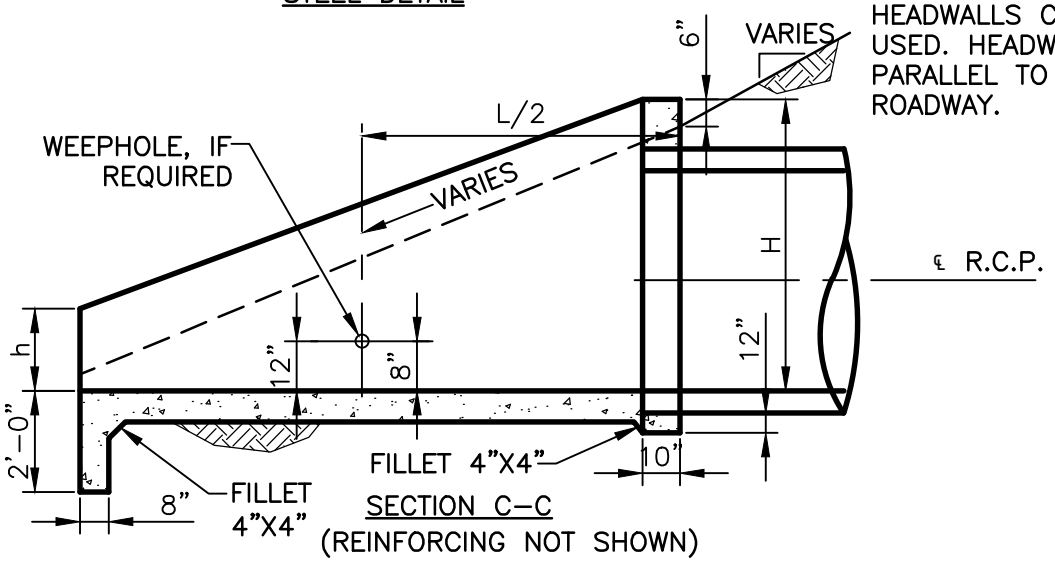

SECTION C–C
(REINFORCING NOT SHOWN)

THIS DETAIL WAS TAKEN FROM THE CITY OF ATLANTA'S WEBSITE. IT MAY HAVE BEEN MODIFIED AND SHOULD BE REVIEWED THOROUGHLY.

City of Atlanta	STANDARD DETAILS	REV. DATE: SEPT 2011 ORIG. DATE: JULY 1984 SCALE: N.T.S.
	TYPE C HEADWALL SHEET 1 OF 3	DETAIL NO. SW–G_HW004