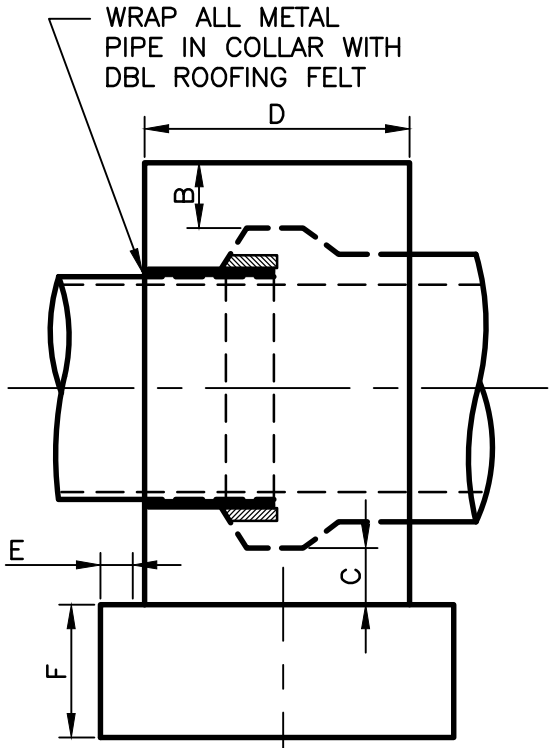

SIDE ELEV.

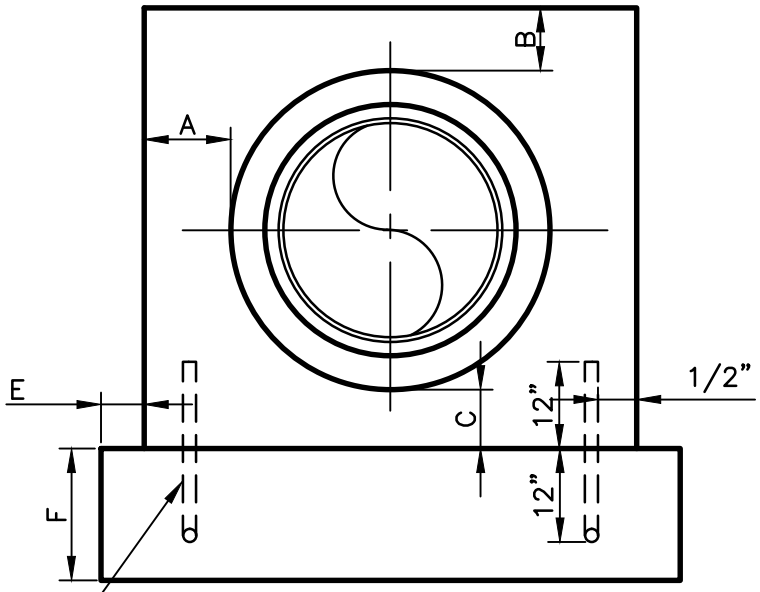

#8 DOIVEL STEEL

END ELEV.

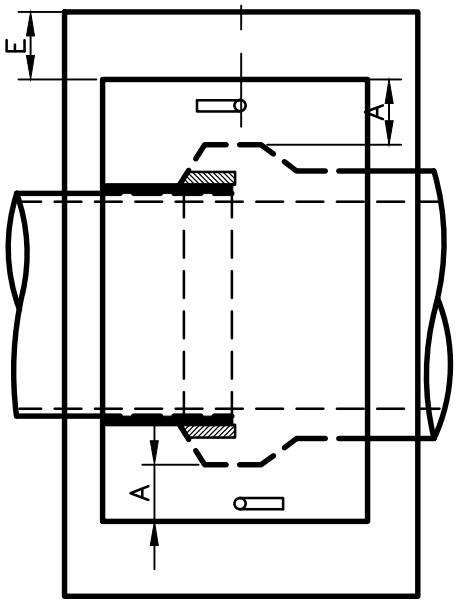

PLAN VIEW

TABLE FOR PIPE SIZE 8" TO 84"

PIPE SIZE	A	B	C	D	E	F
8'–18"	6"	6"	6"	24"	6"	18"
21"–27"	8"	8"	8"	30"	6"	18"
30"–42"	12"	8"	8"	36"	6"	18"
48"–54"	15"	10"	10"	42"	10"	18"

NOTE:
FOR PIPE THRU 18" – NO DOIVELS REQUIRED. CONCRETE TO BE CLASS "A"

THIS DETAIL WAS TAKEN FROM THE CITY OF ATLANTA'S WEBSITE. IT MAY HAVE BEEN MODIFIED AND SHOULD BE REVIEWED THOROUGHLY.

City of Atlanta

STANDARD DETAILS

STANDARD COLLAR WALL

REV.
DATE: SEPT 2011
ORIG. DATE: JULY 1984
SCALE: N.T.S.

DETAIL NO. SW–G_CW001