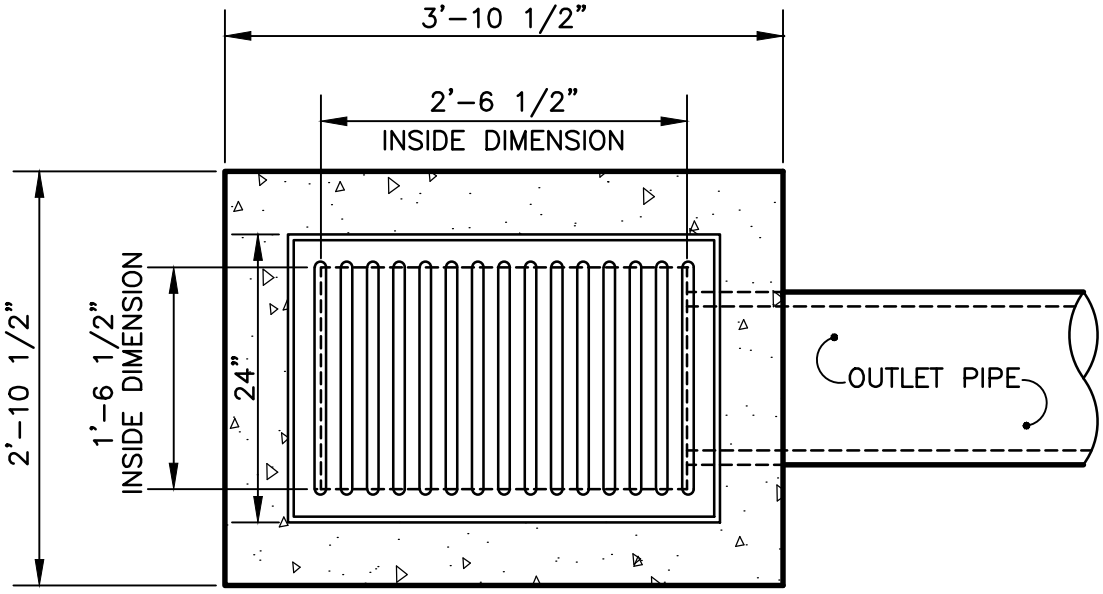

NOTE:
INLET STRUCTURE STRUCTURAL DESIGN SHALL CONFORM TO ACI 318. DESIGN SHALL INCLUDE HS20 TRAFFIC LOADING.

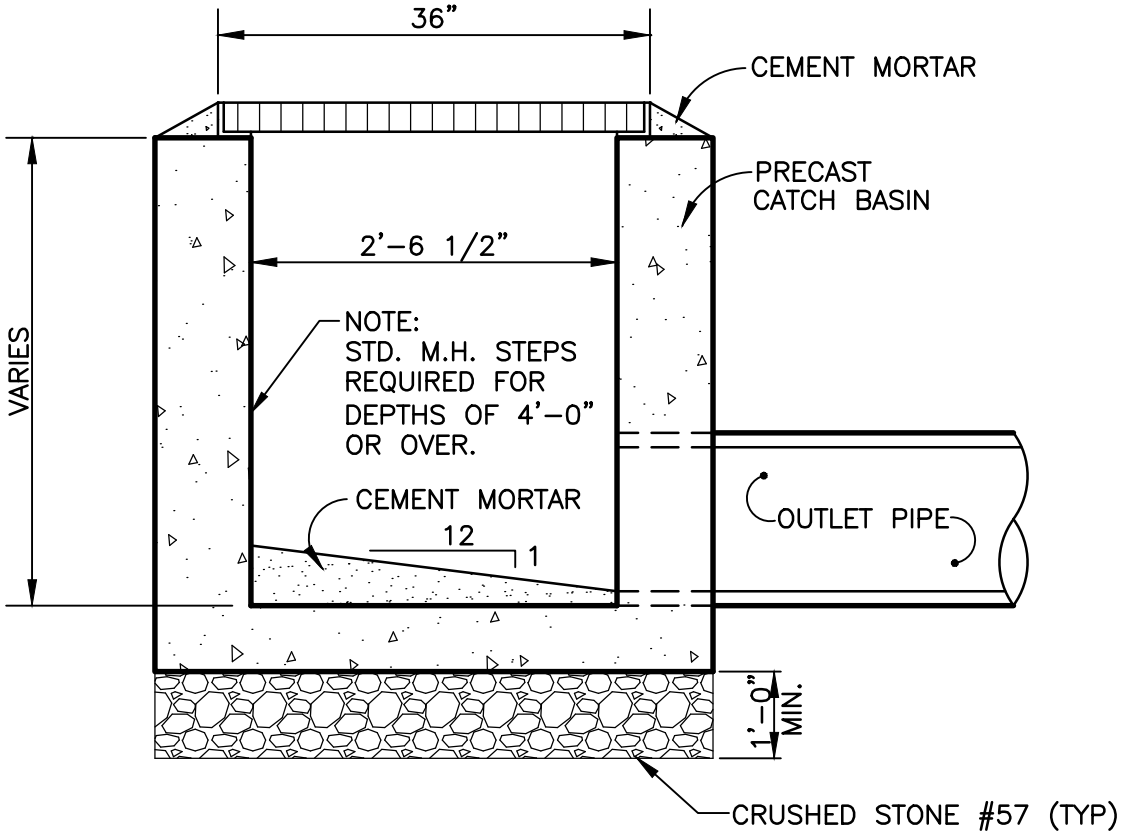

THIS DETAIL WAS TAKEN FROM THE CITY OF ATLANTA'S WEBSITE. IT MAY HAVE BEEN MODIFIED AND SHOULD BE REVIEWED THOROUGHLY.

City of Atlanta	STANDARD DETAILS	REV. DATE: SEPT 2011 ORIG. DATE: NOV 2004 SCALE: N.T.S.
	STANDARD DROP INLET	DETAIL NO. SW–G_DI001A