City of Atlanta

STANDARD DETAILS

TYPE "C" CATCH BASIN

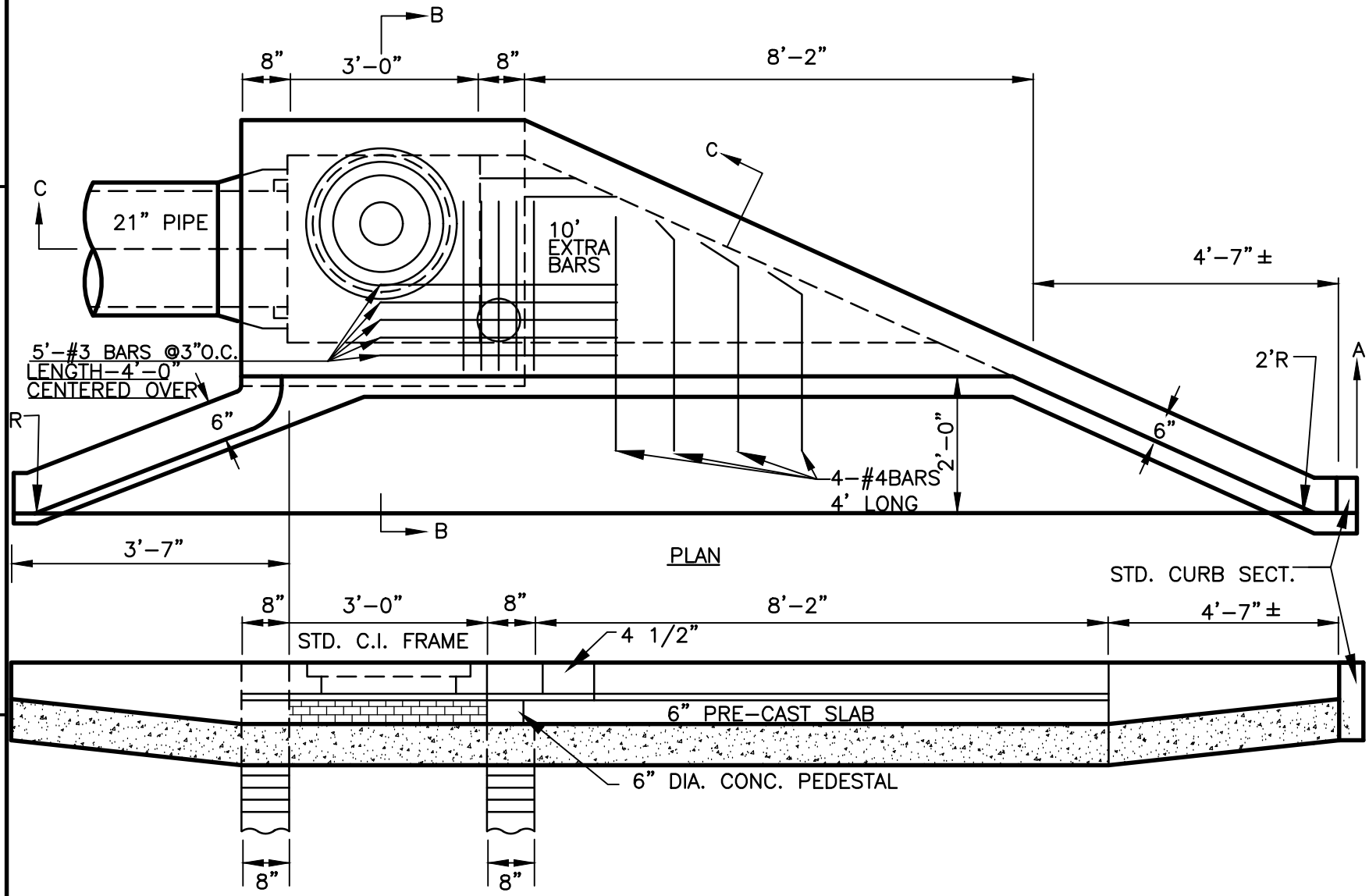

SECTION A-A

THIS DETAIL WAS TAKEN FROM THE CITY OF ATLANTA'S WEBSITE. IT MAY HAVE BEEN MODIFIED AND SHOULD BE REVIEWED THOROUGHLY.

REV.
DATE: SEPT 2011
ORIG. DATE: JAN 1968
SCALE: N.T.S.

DETAIL NO. SW-G_CB011