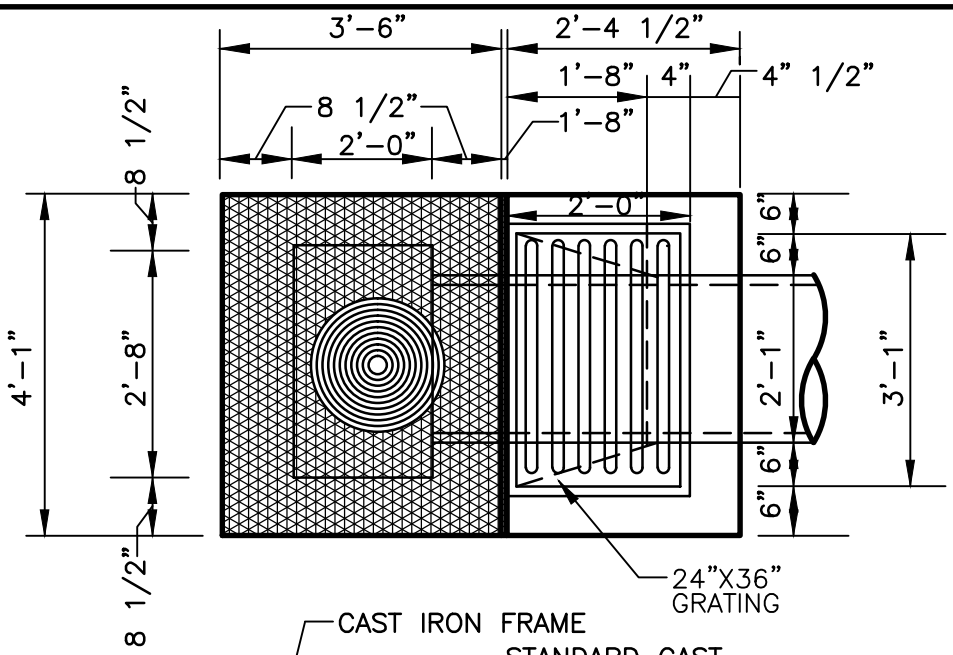

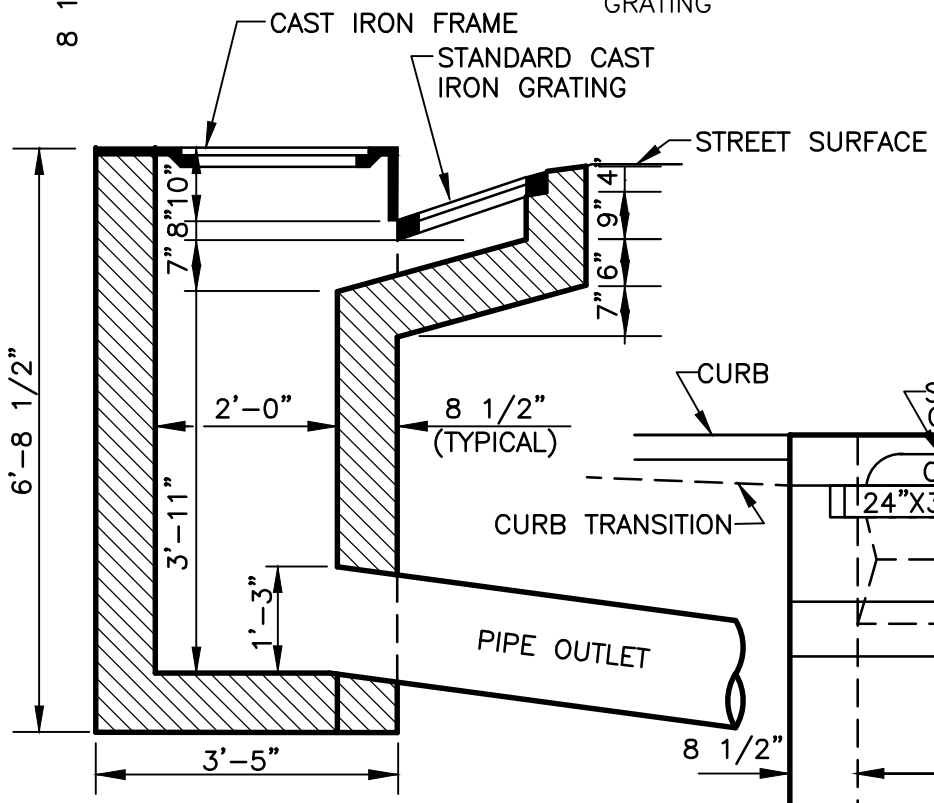

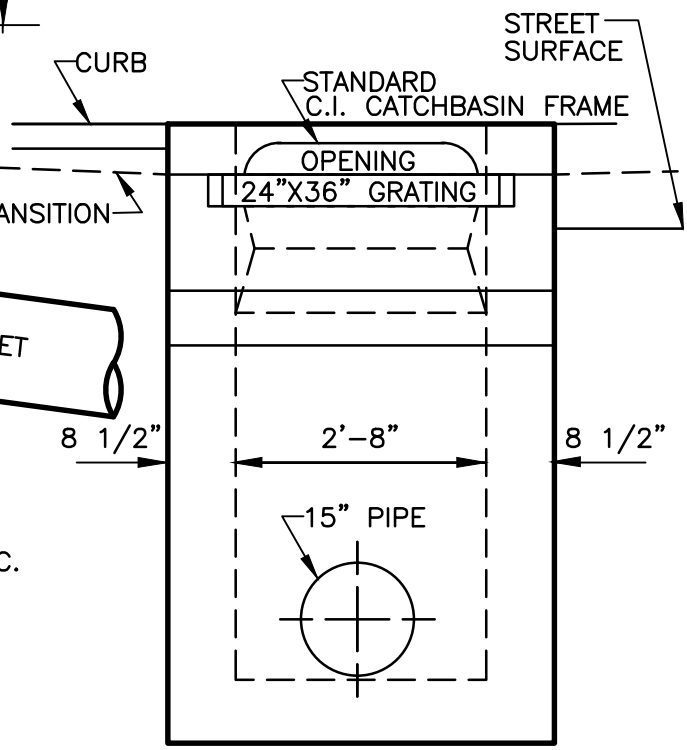

NOTE:

1. SEE CITY OF ATLANTA STANDARD COMB. CONC. CURB AND GUTTER (8"X30").
2. NOT FOR NEW INSTALLATION.

THIS DETAIL WAS TAKEN FROM THE CITY OF ATLANTA'S WEBSITE. IT MAY HAVE BEEN MODIFIED AND SHOULD BE REVIEWED THOROUGHLY.

City of Atlanta Department of Public Works	STANDARD DETAILS	DATE: SEPT 2011 ORIG. DATE: AUG 1973 SCALE: N.T.S.
	STANDARD CURB CATCH BASIN TYPE "A"	DETAIL NO. SW-G_CB004