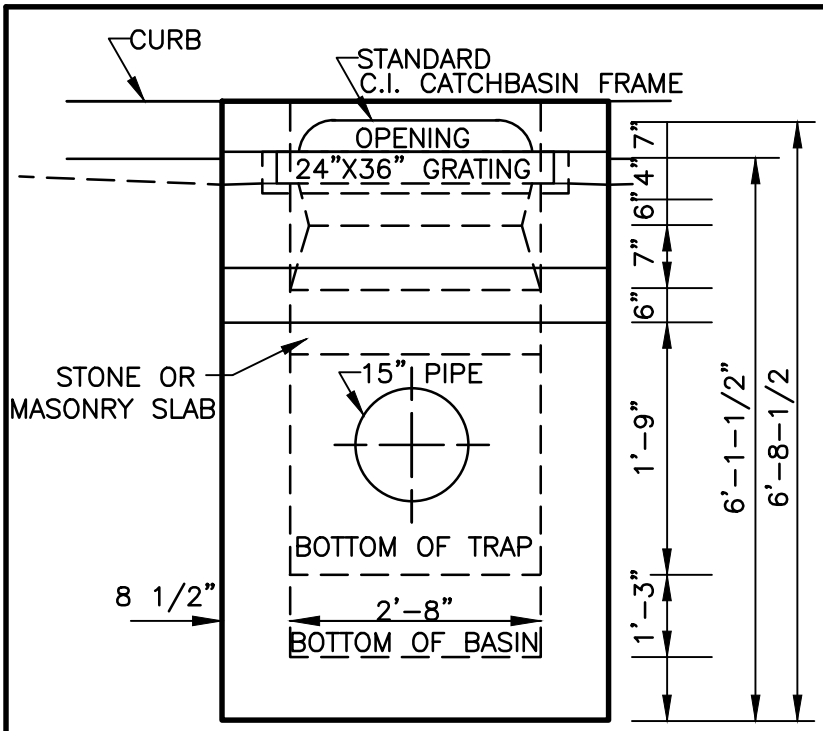

FRONT ELEVATION

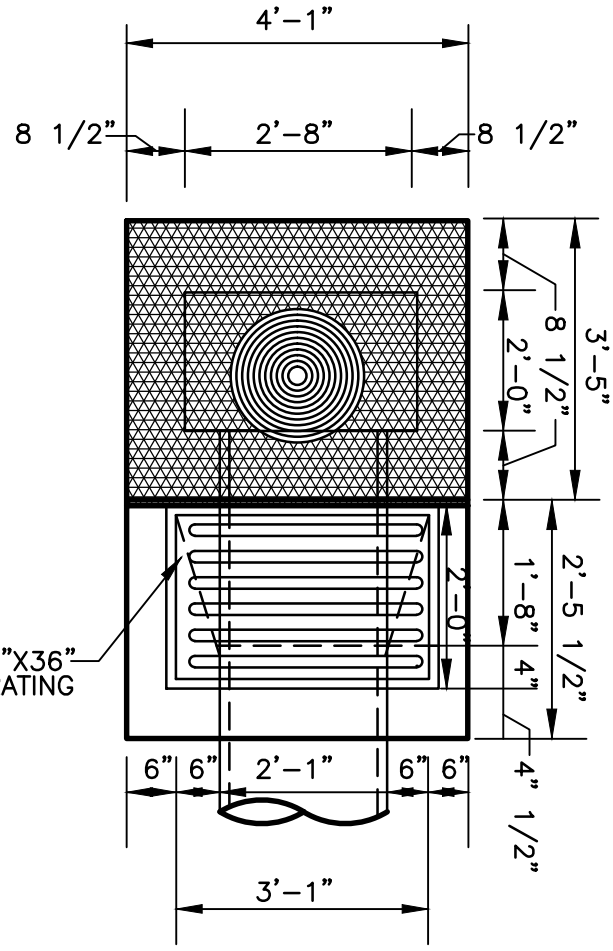

PLAN

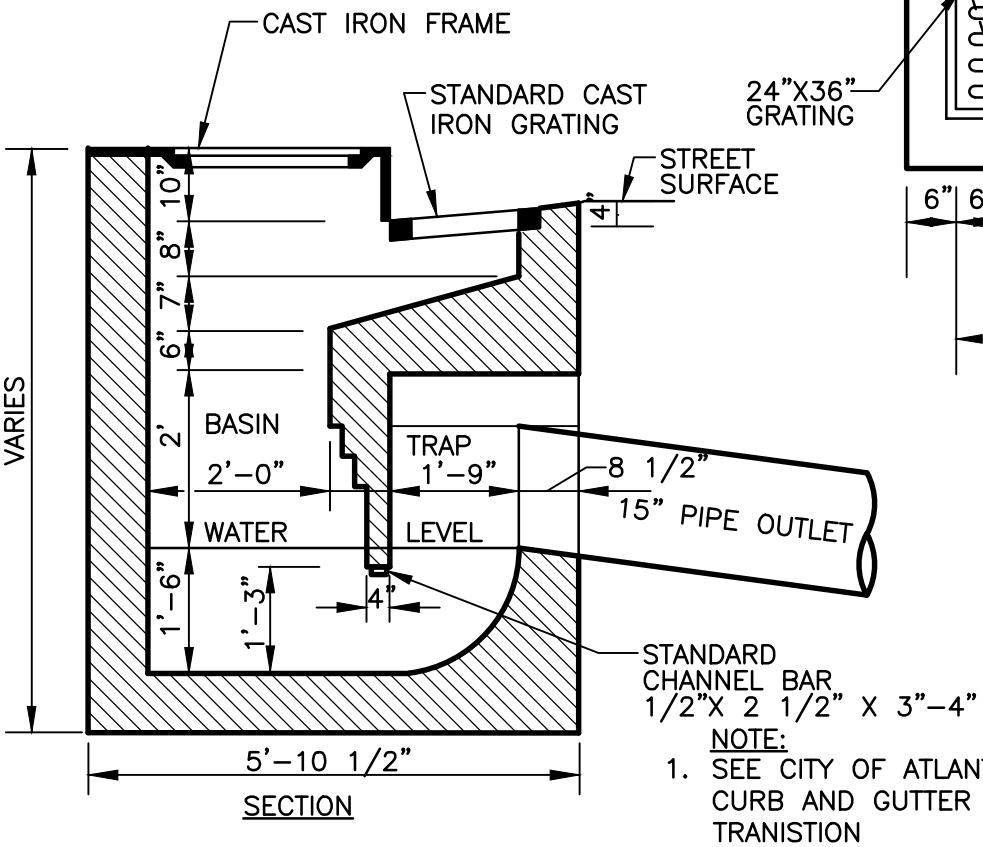

SECTION

NOTE:

1. SEE CITY OF ATLANTA STANDARD COMB. CONC. CURB AND GUTTER (8"X30") FOR CURB TRANISTION
2. NOT FOR NEW INSTALLATION.

THIS DETAIL WAS TAKEN FROM THE CITY OF ATLANTA'S WEBSITE. IT MAY HAVE BEEN MODIFIED AND SHOULD BE REVIEWED THOROUGHLY.

City of Atlanta

STANDARD DETAILS

STANDARD TRAP CATCH BASIN TYPE "A"

REV.
DATE: SEPT 2011
ORIG. DATE: JULY 1966
SCALE: N.T.S.

DETAIL NO. SW-G_CB005