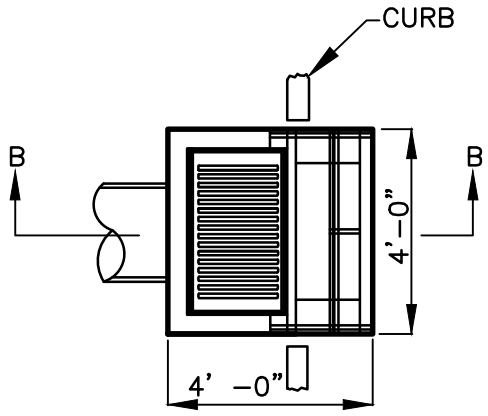

PLAN
SINGLE INSTALLATION

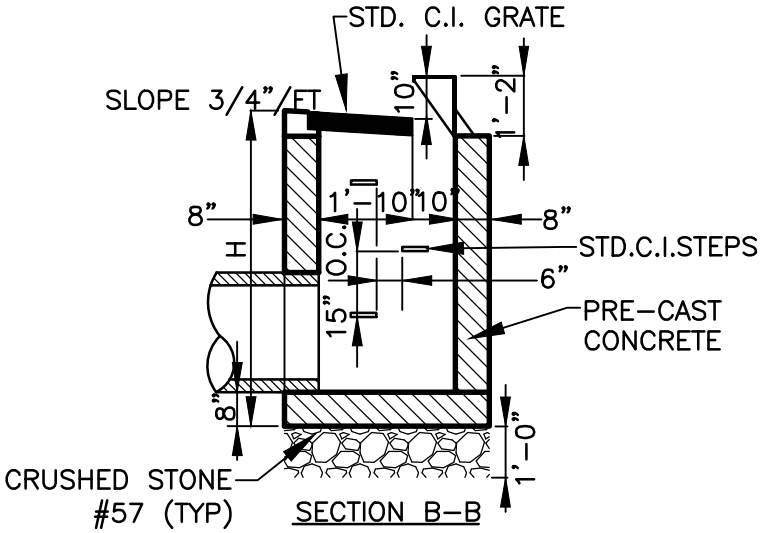

SECTION B-B

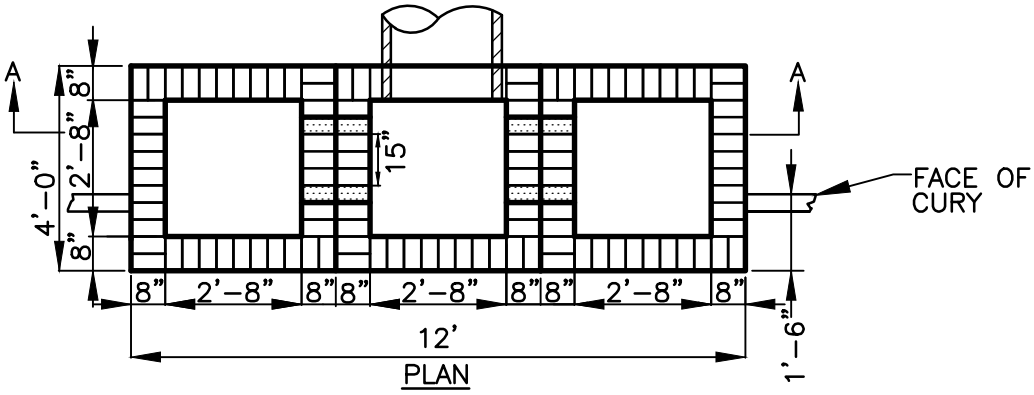

PLAN

MULTIPLE INSTALLATION
W/ HOODS AND GRATES REMOVED

NOTE:
CATCH BASINS SHALL HAVE LIVE LOAD RATING OF HS20

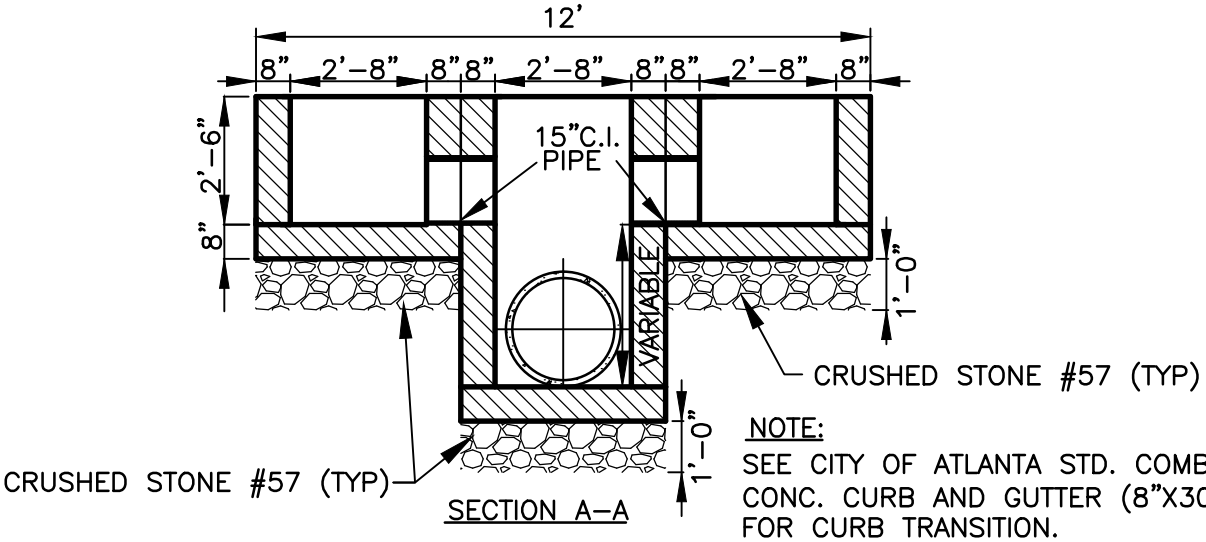

SECTION A-A

NOTE:
SEE CITY OF ATLANTA STD. COMB. CONC. CURB AND GUTTER (8"X30") FOR CURB TRANSITION.

THIS DETAIL WAS TAKEN FROM THE CITY OF ATLANTA'S WEBSITE. IT MAY HAVE BEEN MODIFIED AND SHOULD BE REVIEWED THOROUGHLY.

City of Atlanta	STANDARD DETAILS	REV.
		DATE: SEPT 2011
	TYPE "B" CATCH BASIN	ORIG. DATE: N/A
		SCALE: N.T.S.
		DETAIL NO. SW-G_CB008