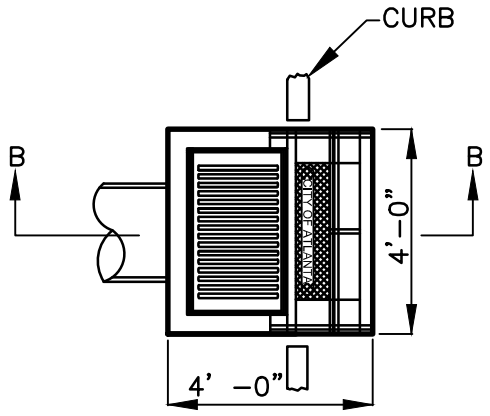

PLAN
SINGLE INSTALLATION

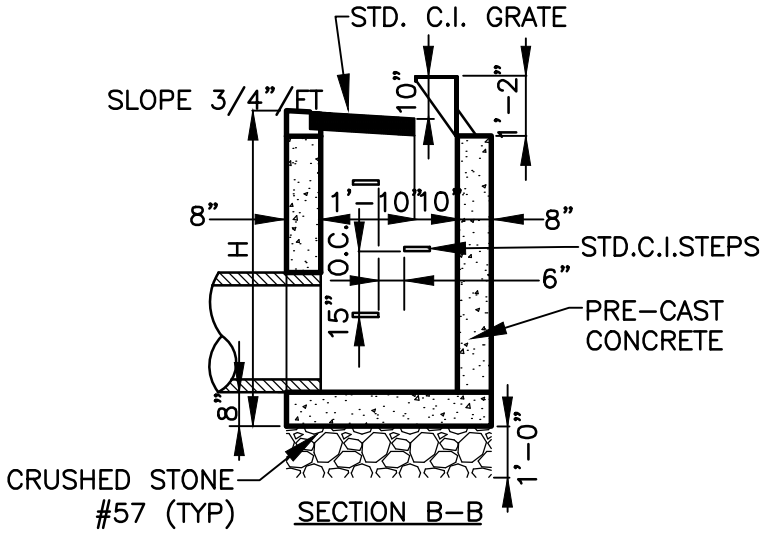

SECTION B-B

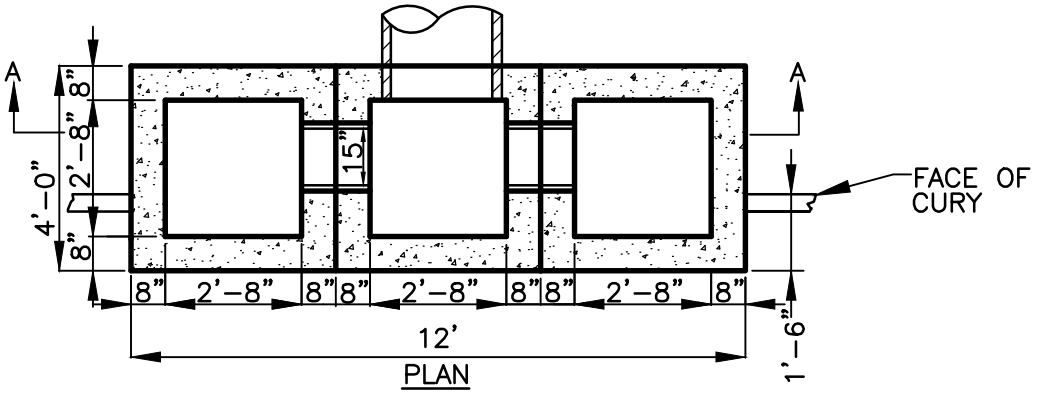

PLAN

NOTE:
CATCH BASINS SHALL HAVE LIVE LOAD RATING OF HS20

MULTIPLE INSTALLATION
W/ HOODS AND GRATES REMOVED

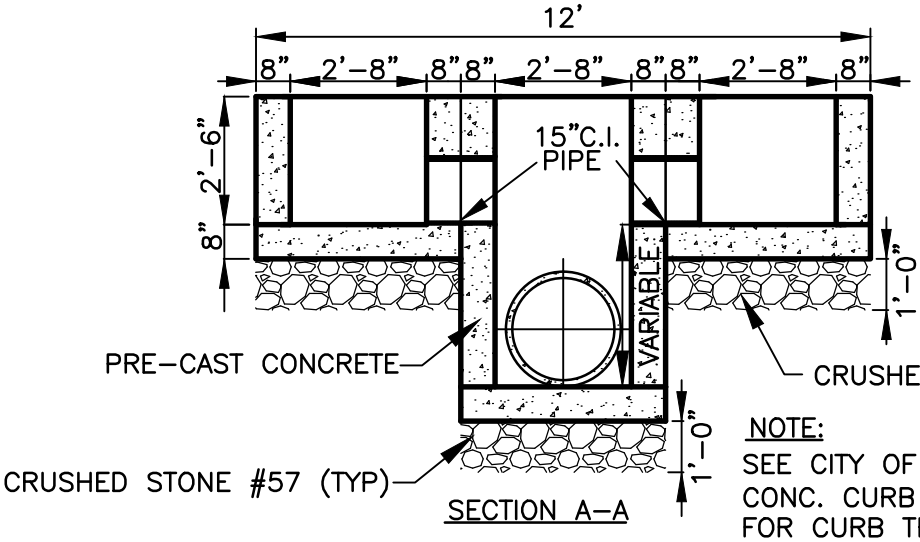

SECTION A-A

NOTE:
SEE CITY OF ATLANTA STD. COMB. CONC. CURB AND GUTTER (8"X30") FOR CURB TRANSITION. SEE DETAIL NO. C-2

THIS DETAIL WAS TAKEN FROM THE CITY OF ATLANTA'S WEBSITE. IT MAY HAVE BEEN MODIFIED AND SHOULD BE REVIEWED THOROUGHLY.

City of Atlanta	STANDARD DETAILS	REV. DATE: SEPT 2011 ORIG. DATE: NOV 2004 SCALE: N.T.S.
	TYPE "B" CATCH BASIN	DETAIL NO. SW-G_CB003