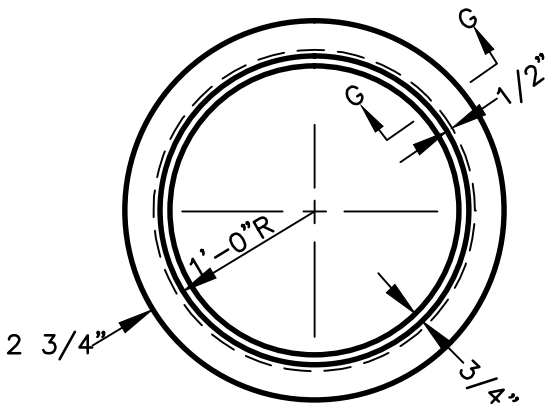

FRAME

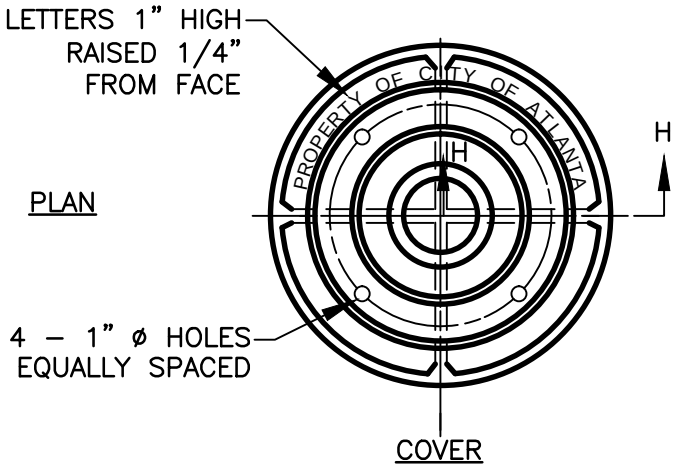

PLAN

COVER

ELEVATION

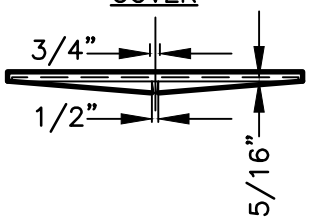

NOTE:
(1) RIM AND COVER TO BE GRAY IRON CASTING ACCORDING TO ASTM SPECIFICATION NO. A–48–30.
(2) RIM AND COVER MUST BE FITTED BEFORE LEAVING SHOP.

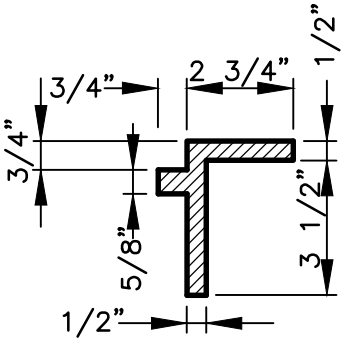

SECTION G–G

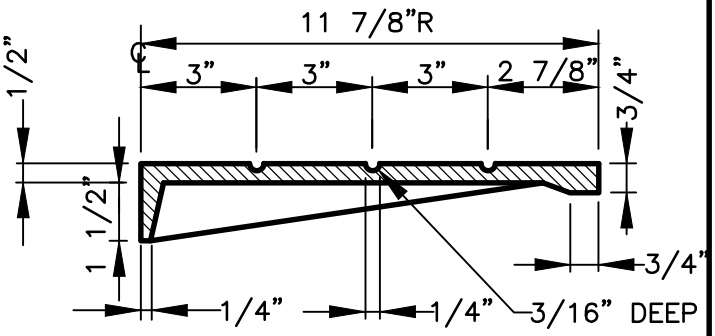

SECTION H–H

THIS DETAIL WAS TAKEN FROM THE CITY OF ATLANTA'S WEBSITE. IT MAY HAVE BEEN MODIFIED AND SHOULD BE REVIEWED THOROUGHLY.

City of Atlanta	STANDARD DETAILS	REV. DATE: SEPT 2011 ORIG. DATE: NOV 2004 SCALE: N.T.S.
	LIGHT CASTING FRAME AND COVER FOR PRECAST SLABS	DETAIL NO. SS–G_FC001