NOTES:

1. CONNECTION TO NEW SEWER SHALL BE WITH TEE OR WYE.
2. NO TEES OR WYES ON RCP OR DIP SEWERS LARGER THAN 12"ø.
3. VCP USE WYES ONLY
4. FOR LARGER DIAMETER CONNECTIONS SEE DETAIL SS-2.

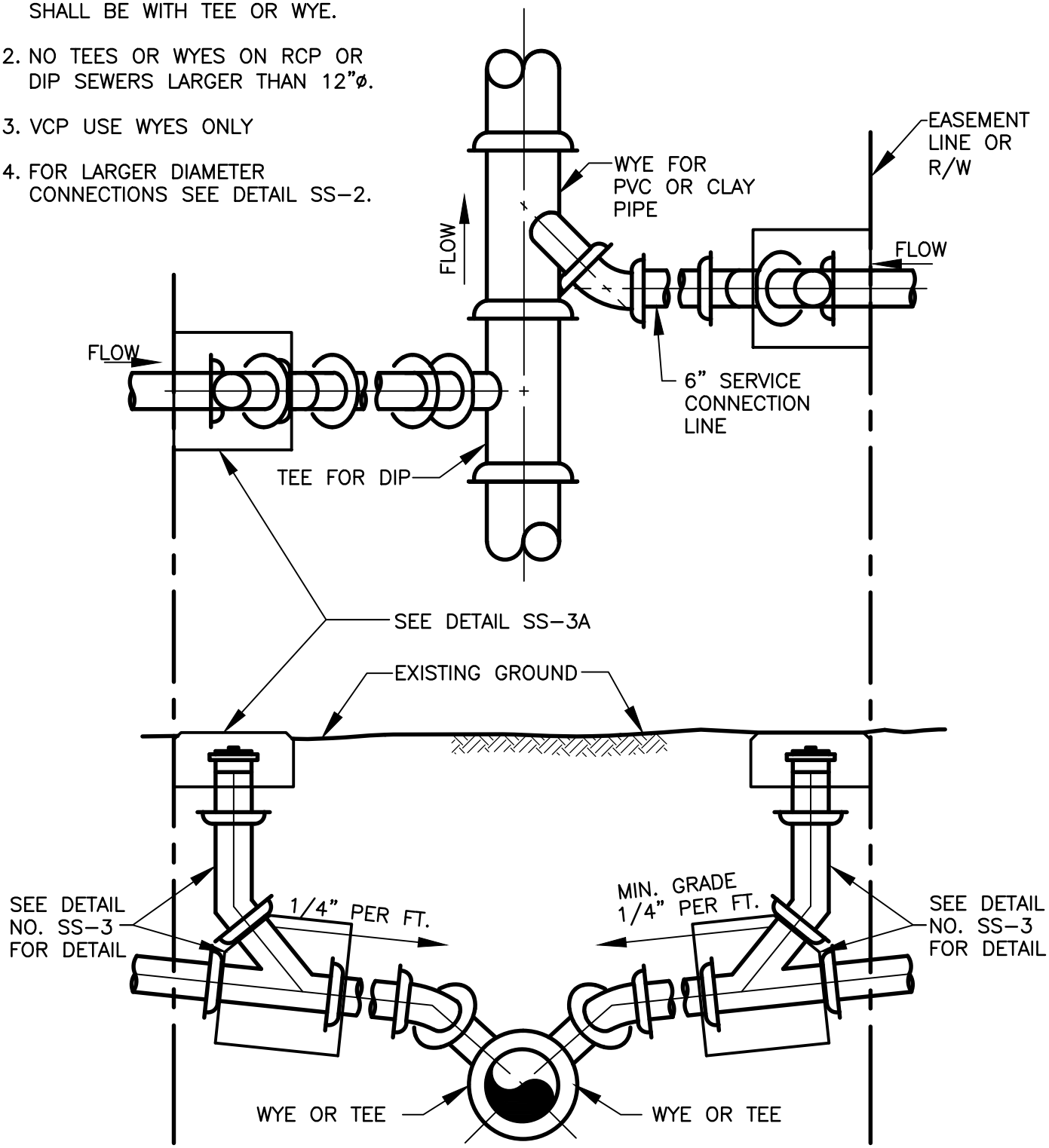

THIS DETAIL WAS TAKEN FROM THE CITY OF ATLANTA'S WEBSITE. IT MAY HAVE BEEN MODIFIED AND SHOULD BE REVIEWED THOROUGHLY.

City of Atlanta	STANDARD DETAILS	REV.
		DATE: OCT. 2011
		ORIG. DATE: NOV 2004
	SERVICE CONNECTION ON NEW SEWERS	SCALE: N.T.S.
		DETAIL NO. SS-G_SC001